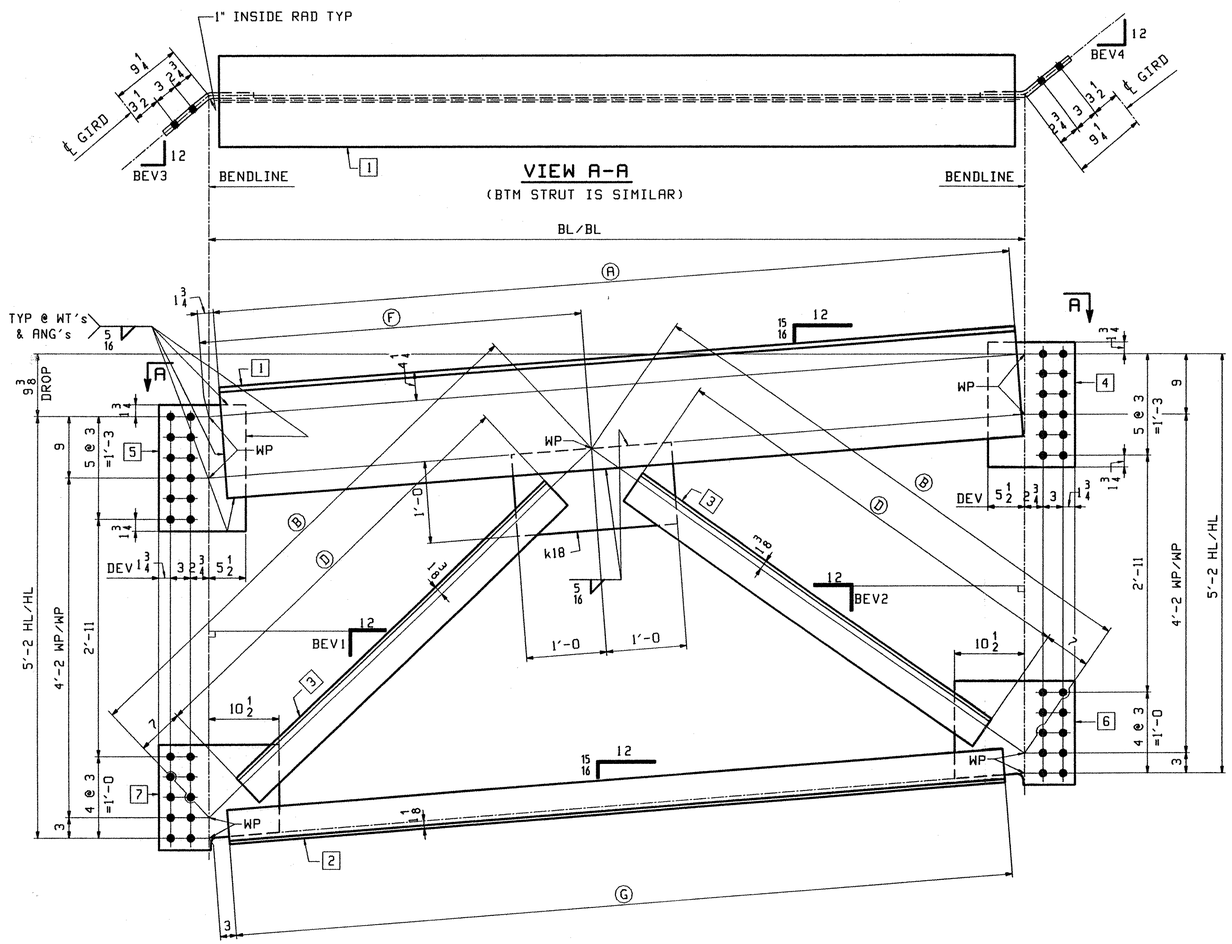

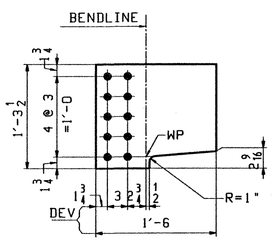

DETAIL OF 7

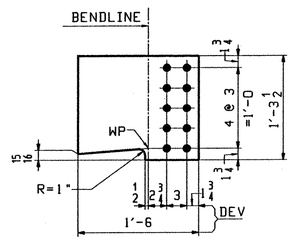

DETAIL OF 6

ABUTMENT CROSSFRAMES TYPE C1

(ALL PAINTED)

MARK	REQ'd	BL/BL	Ⓐ	Ⓑ	Ⓓ	Ⓕ	Ⓖ	BEV1	BEV2	BEV3	BEV4	1	2	3	4	5	6	7
18CF1	1	9'-11 3/16	9'-8	6'-5 13/16	5'-2 1/2	4'-7 1/8	9'-5 1/2	11 3/4	8 1/2	9 7/8	9 11/16	a18	b18	c18	d18	f18	g18	h18
18CF2	1	10'-0 1/8	9'-9	6'-6 3/16	5'-3	4'-7 5/8	9'-6 1/2	11 5/8	8 7/16	10 1/16	9 7/8	m18	n18	p18	s18	t18	v18	w18
18CF3	1	10'-1 3/16	9'-10	6'-6 9/16	5'-3 1/4	4'-8 3/16	9'-7 1/2	11 1/2	8 3/8	10 5/16	10 1/16	aa18	ab18	ac18	ad18	af18	ag18	ah18
18CF4	1	10'-2 1/4	9'-11	6'-7	5'-3 3/4	4'-8 13/16	9'-8 1/2	11 3/8	8 5/16	10 1/2	10 5/16	am18	an18	ap18	as18	at18	av18	aw18

ABM INFO PAGE	LINE	SHIP MARK	QTY	MARK	MATERIAL	LENGTH FT	LENGTH INCHES	REMARKS	JOB NO. / DRAWING NO. 18 WT	PROCUREMENT NOTES	REV.
		18CF3	1		CROSSFRAME				1126		
8	B		1	aa18	WT 16.5x59	9	10	(M270-50WT2) (H2-3)			
8	D		1	ab18	WT 5x19.5	9	7 1/2	(M270-50WT2) (H2-3)			
8	E		2	ac18	L 5x5x 1/2	5	3 1/4	(M270-50WT2) (H2-3)			
8	J		1	ad18	PL 1/2x18 1/2	1	1	(M270-50WT2) (H2-3)BENT			
8	J		1	af18	PL 1/2x18 1/2	1	1	(M270-50WT2) (H2-3)BENT			
8	K		1	ag18	PL 1/2x15 1/2	1	6	(M270-50WT2) (H2-3)BENT			
8	K		1	ah18	PL 1/2x15 1/2	1	6	(M270-50WT2) (H2-3)BENT			
8	H		1	k18	PL 1/2x12	2	0	(M270-50WT2) (H2-3)			
		18CF4	1		CROSSFRAME				1134		
8	B		1	am18	WT 16.5x59	9	11	(M270-50WT2) (H2-3)			
8	D		1	an18	WT 5x19.5	9	8 1/2	(M270-50WT2) (H2-3)			
8	E		2	ap18	L 5x5x 1/2	5	3 3/4	(M270-50WT2) (H2-3)			
8	J		1	as18	PL 1/2x18 1/2	1	1	(M270-50WT2) (H2-3)BENT			
8	J		1	at18	PL 1/2x18 1/2	1	1	(M270-50WT2) (H2-3)BENT			
8	K		1	av18	PL 1/2x15 1/2	1	6	(M270-50WT2) (H2-3)BENT			
8	K		1	aw18	PL 1/2x15 1/2	1	6	(M270-50WT2) (H2-3)BENT			
8	H		1	k18	PL 1/2x12	2	0	(M270-50WT2) (H2-3)			

ABM INFO PAGE	LINE	SHIP MARK	QTY	MARK	MATERIAL	LENGTH FT	LENGTH INCHES	REMARKS	JOB NO. / DRAWING NO. 18 WT	PROCUREMENT NOTES	REV.
		18CF1	1		CROSSFRAME				1111		
8	B		1	a18	WT 16.5x59	9	8	(M270-50WT2) (H2-3)			
8	D		1	b18	WT 5x19.5	9	5 1/2	(M270-50WT2) (H2-3)			
8	E		2	c18	L 5x5x 1/2	5	2 1/2	(M270-50WT2) (H2-3)			
8	J		1	d18	PL 1/2x18 1/2	1	1	(M270-50WT2) (H2-3)BENT			
8	J		1	f18	PL 1/2x18 1/2	1	1	(M270-50WT2) (H2-3)BENT			
8	K		1	g18	PL 1/2x15 1/2	1	6	(M270-50WT2) (H2-3)BENT			
8	K		1	h18	PL 1/2x15 1/2	1	6	(M270-50WT2) (H2-3)BENT			
8	H		1	k18	PL 1/2x12	2	0	(M270-50WT2) (H2-3)			
		18CF2	1		CROSSFRAME				1119		
8	B		1	m18	WT 16.5x59	9	9	(M270-50WT2) (H2-3)			
8	D		1	n18	WT 5x19.5	9	6 1/2	(M270-50WT2) (H2-3)			
8	E		2	p18	L 5x5x 1/2	5	3	(M270-50WT2) (H2-3)			
8	J		1	s18	PL 1/2x18 1/2	1	1	(M270-50WT2) (H2-3)BENT			
8	J		1	t18	PL 1/2x18 1/2	1	1	(M270-50WT2) (H2-3)BENT			
8	K		1	v18	PL 1/2x15 1/2	1	6	(M270-50WT2) (H2-3)BENT			
8	K		1	w18	PL 1/2x15 1/2	1	6	(M270-50WT2) (H2-3)BENT			
8	H		1	k18	PL 1/2x12	2	0	(M270-50WT2) (H2-3)			

REV.	REMARKS	DATE	DWN	CHK	APP	Q.A.	NO.	DIA.	LGT	TYPE	WASHER
	OUT FOR APPROVAL	9-9-02									
	OUT FOR APPROVAL										
	ISSUED TO SHOP										
	FIELD & OFFICE										

MATERIAL: M270-50W
ELECTRODES:
HOLES: 1 1/16"Ø (OVS)
SHOP BOLTS:

SURFACE PREP. & PAINT:
-STEEL WITHIN 10'-0 ENDS OF GIRDERS SHALL BE PAINTED (SEE GN1)
-ALL OTHER STEEL SHALL BE BLAST CLEANED AND LEFT UNPAINTED.

DESCRIPTION: ABUTMENT CROSSFRAMES
JOB: VT RTE 9 OVER THE DEERFIELD RIVER
BRIDGE NO. 25A
SEARSBURG, VERMONT
CONTRACTOR: J.A. McDONALD
PROJ NO. PROJ. NHF 010-1(18)
CUSTOMER: VERMONT AGENCY OF TRANSPORTATION

DRAWN BY	VWJ
DATE	08/15
CHKD BY	
DO	08/28
APPROV BY	
SUPERVISOR	W. J. GRITTI
Q.A.	
JOB NO.	166
DRG. NO.	18
REV.	△

TENSOR 2242

CASCO BAY STEEL STRUCTURES, INC.
75 SPRING HILL ROAD SACO, MAINE 04072
PHONE (207) 282-7360 FAX. (207) 282-1179

RECEIVED
OK'D BY DV OK'D BY
SEP 09 2002
RESUBMIT APPROVED ✓
BY RRW DATE 9-27-02

FOR GENERAL NOTES SEE GN1.

668-B225A-5518