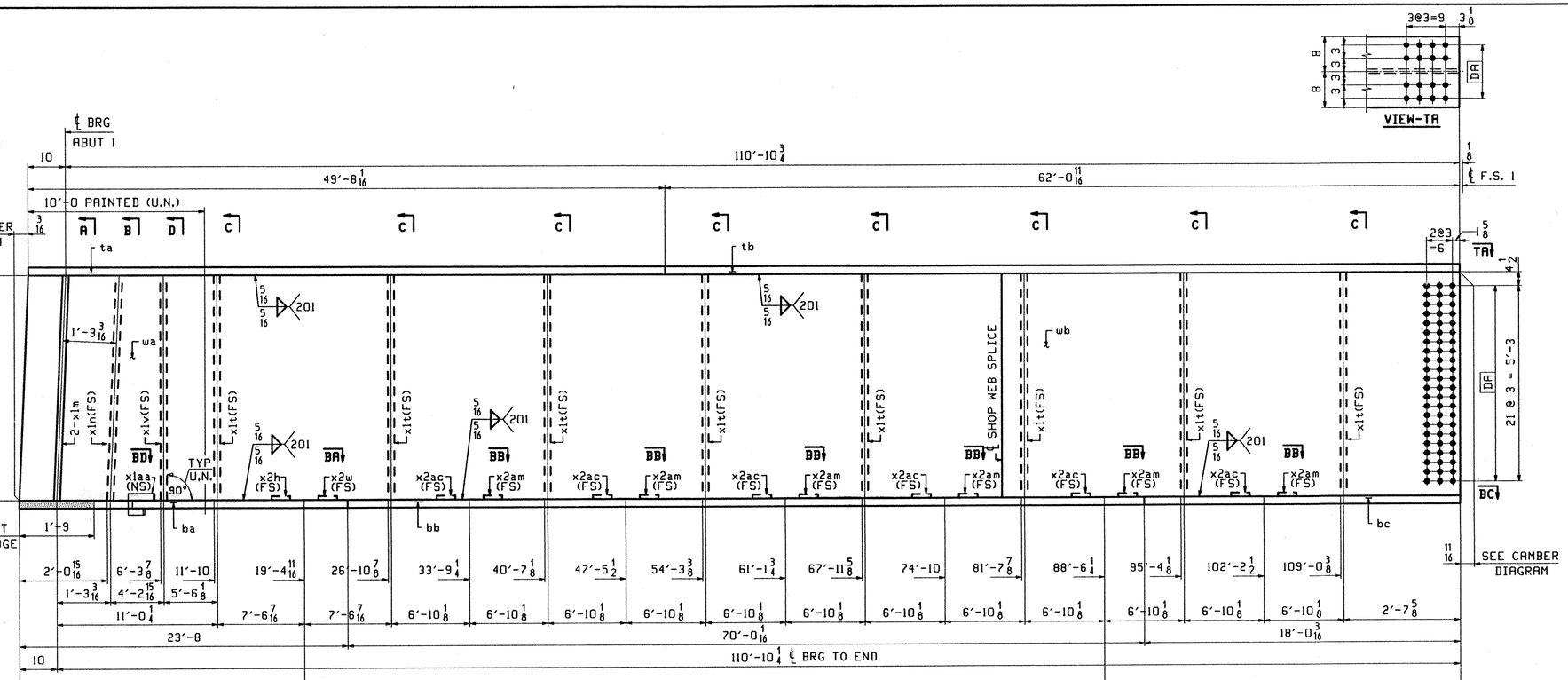

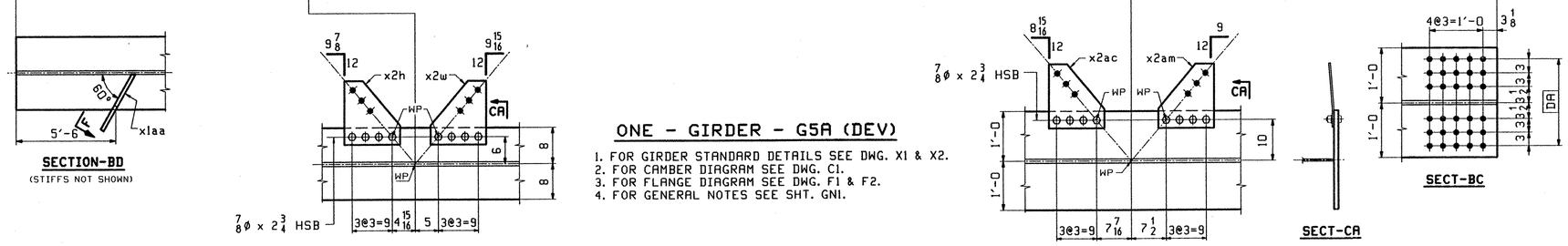

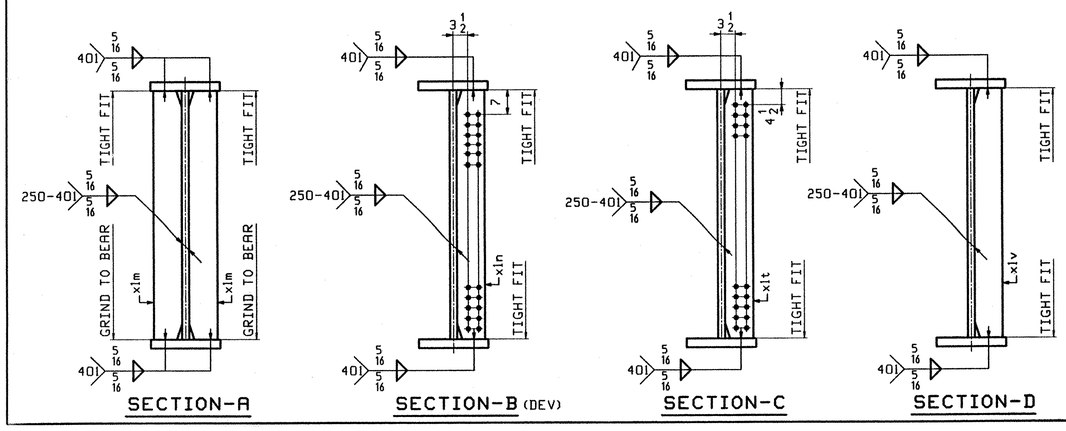

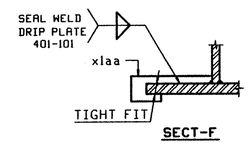

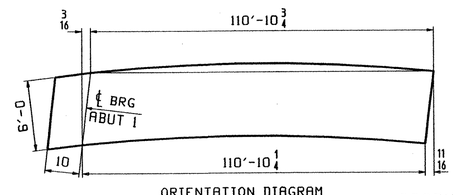

ORIENTATION DIAGRAM
FOR CAMBER SEE SHEET C1

RECEIVED
SEP 09 2002

ABM INFO PAGE	ABM INFO LINE	SHIP MARK	QTY	MARK	MATERIAL	LENGTH FT	LENGTH INCHES	REMARKS	WT	PROCUREMENT NOTES
		G5A	1		GIRDER				29922	
5	J		1	wa	PL 1/2x73 5/8	79	4 1/4	(M270-50WT2) (H2-3)		
6	A		1	wb	PL 1/2x72 1/4	32	4 15/16	(M270-50WT2) (H2-3)		
3	N		1	ta	PL 1x16	49	8 1/16	(M270-50WT2) (H2-3)		
2	Y		1	tb	PL 1x16	62	0 11/16	(M270-50WT2) (H2-3)		
4	C		1	ba	PL 1x16	23	8	(M270-50WT2) (H2-3)		
2	C		1	bb	PL 1x24	70	0 1/16	(M270-50WT2) (H2-3)		
2	J		1	bc	PL 1x24	18	0 3/16	(M270-50WT2) (H2-3)		
7	M		2	x1m	PL 1x8	6	0	(M270-50WT2) (H2-3)		
7	P		8	x1t	PL 1/2x8	6	0	(M270-50WT2) (H2-3)		
7	T		1	x2h	PL 3/8x12 1/2	1	2 1/2	BENT		
7	T		1	x2w	PL 3/8x12 1/2	1	2 1/2	BENT		
7	T		6	x2ac	PL 3/8x12 1/2	1	2 1/2	BENT		
7	T		6	x2am	PL 3/8x12 1/2	1	2 1/2	BENT		
7	P		1	x1n	PL 1/2x8	6	0	(M270-50WT2) (H2-3)		
7	P		1	x1v	PL 1/2x8	6	0	(M270-50WT2) (H2-3)		
7	R		1	x1aa	PL 1/4x3	0	11			
9	M		56		7/8 ø HSB	0	2 3/4	(A325-3)		
9	T		56		7/8 ø HSW			(F436H)		

BILL OF MATERIAL — JOB NO. — DRAWING NO. 5 — REV.

REV.	REMARKS	DATE	DWN	CHK	APP	Q.A.	NO.	DIA.	LGT	TYPE	WASHER
OUT FOR APPROVAL		9.9.02									
OUT FOR APPROVAL											
ISSUED TO SHOP											
FIELD & OFFICE											

MATERIAL: M270-50W
ELECTRODES:
HOLES: 15/16"ø (UN)
SHOP BOLTS: AS NOTED

SURFACE PREP. & PAINT:
-STEEL WITHIN 10'-0 ENDS OF GIRDERS SHALL BE PAINTED (SEE GN1)
-ALL OTHER STEEL SHALL BE BLAST CLEANED AND LEFT UNPAINTED.

DESCRIPTION:	GIRDER - G5A	DRAWN BY	DATE
JOB:	VT RTE 9 OVER THE DEERFIELD RIVER	ATD	08/23
	BRIDGE NO. 25A	CHKD BY	
	SEARSBURG, VERMONT	DO	08/28
	CONTRACTOR: J.A. McDONALD	APPROV BY	
		SUPERVISOR	W. J. GALLI
PROJ NO.	PROJ. NHF 010-1(18)	Q.A.	
CUSTOMER:	VERMONT AGENCY OF TRANSPORTATION		

TENSOR 2242

CASCO BAY STEEL STRUCTURES, INC.
75 SPRING HILL ROAD SACO, MAINE 04072
PHONE (207) 282-7360 FAX. (207) 282-1179

JOB NO. 166 — DRG. NO. 5 — REV. △

655_BR25A-SS-5