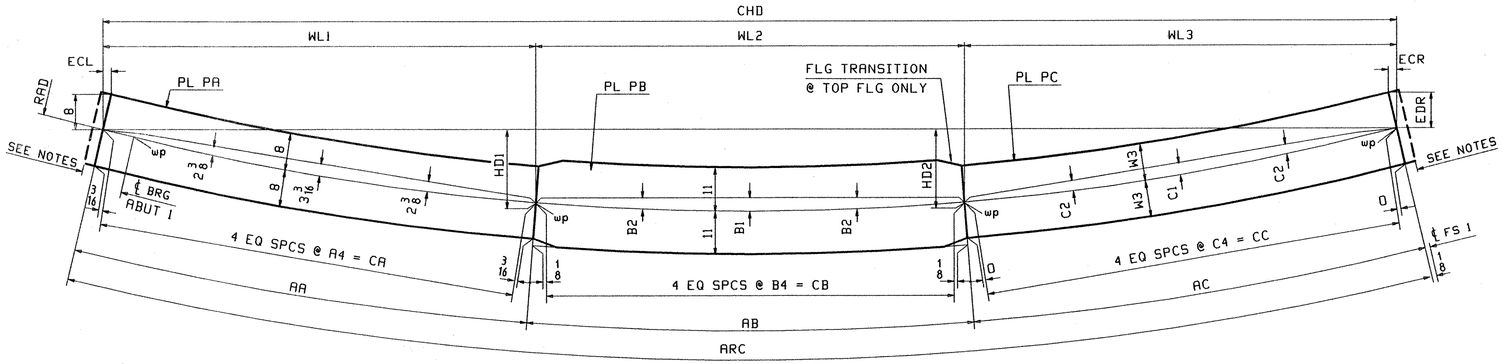

SECTION A-A

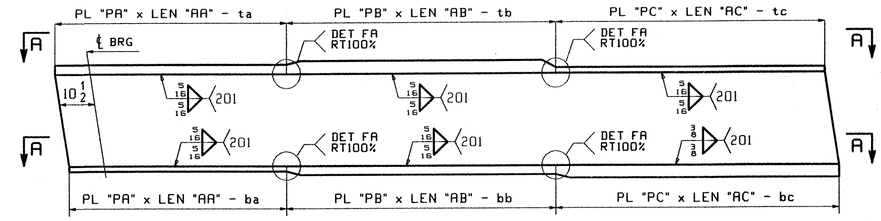

FLANGE DIAGRAM FOR G1A & G2A

LOCATION	RAD	ARC	CHD	AA	AB	AC	A4	CA	B1	B2	B4	CB	C1	C2	C4	CC	ECL	ECR	EDR	WL1	WL2	WL3	HD1	HD2	W3	PL PA (M270-50WT2)	PL PB (M270-50WT2)	PL PC (M270-50WT2)
G1A TOP FLG	1254.74	90'-10 11/16	90'-10 7/16	51'-7 3/4	24'-10 1/16	14'-4 7/8	12'-10 15/16	51'-7 11/16	3/4	9/16	6'-2 1/2	24'-10	1/4	3/16	3'-7 1/4	14'-4 7/8	5/16	5/16	8	51'-7 5/8	24'-10	14'-4 13/16	9 11/16	5 1/4	8	PL 1 x 16 -ta (H2-3) (2/U)	PL 1 1/4 x 22 -tb (H2-3) (2/Q)	PL 7/8 x 16 -tc (H2-3) (4/J)
G1A BTM FLG	1254.74	90'-10 3/8	90'-10 1/8	51'-7 7/16	24'-10 1/16	14'-4 7/8	12'-10 7/8	51'-7 3/8	3/4	9/16	6'-2 1/2	24'-10	1/4	3/16	3'-7 1/4	14'-4 7/8	5/16	3/8	11	51'-7 5/16	24'-10	14'-4 13/16	9 11/16	5 1/4	11	PL 1 x 16 -ba (H2-3) (2/W)	PL 1 1/4 x 22 -bb (H2-3) (2/Q)	PL 1 1/2 x 22 -bc (H2-3) (1/J)
G2A TOP FLG	1263.99	85'-5 1/8	85'-4 15/16	51'-10 3/16	24'-0 1/16	9'-6 7/8	12'-11 9/16	51'-10 3/16	11/16	1/2	6'-0	24'-0	1/8	1/16	2'-4 3/4	9'-6 7/8	1/4	1/4	8	51'-10 1/8	24'-0	9'-6 13/16	8 1/4	3 7/16	8	PL 1 x 16 -ta (H2-3) (2/U)	PL 1 1/4 x 22 -tb (H2-3) (2/S)	PL 7/8 x 16 -tc (H2-3) (4/Q)
G2A BTM FLG	1263.99	85'-4 3/4	85'-4 9/16	51'-9 13/16	24'-0 1/16	9'-6 7/8	12'-11 7/16	51'-9 13/16	11/16	1/2	6'-0	24'-0	1/8	1/16	2'-4 3/4	9'-6 7/8	1/4	3/8	11	51'-9 3/4	24'-0	9'-6 13/16	8 1/4	3 7/16	11	PL 1 x 16 -ba (H2-3) (2/U)	PL 1 1/4 x 22 -bb (H2-3) (2/S)	PL 1 1/2 x 22 -bc (H2-3) (1/L)

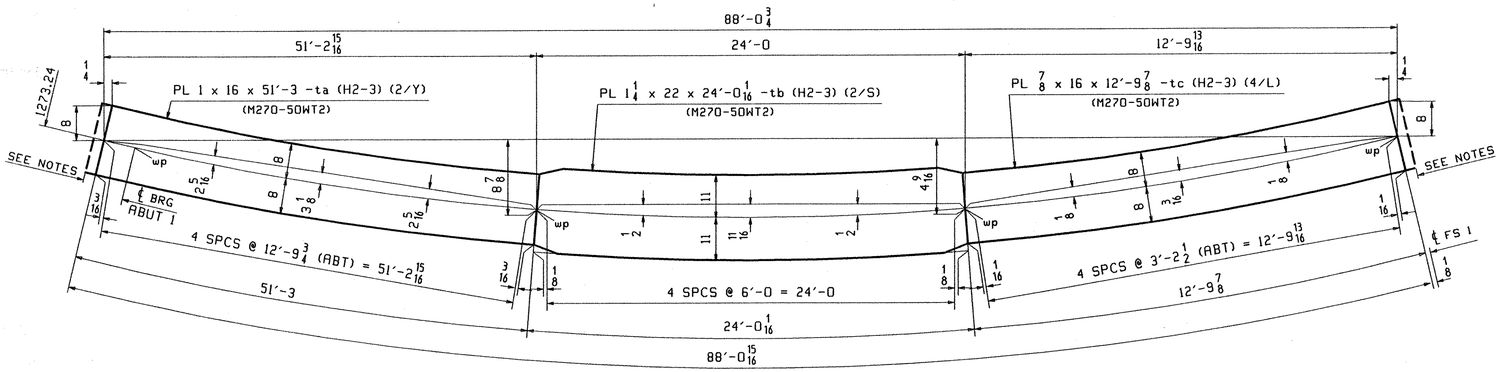

SECTION B-B FOR G3A TOP FLG

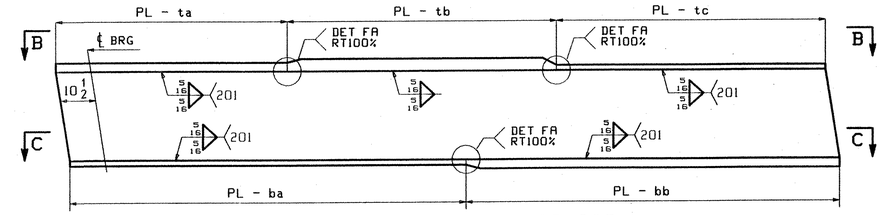

FLANGE DIAGRAM FOR G3A

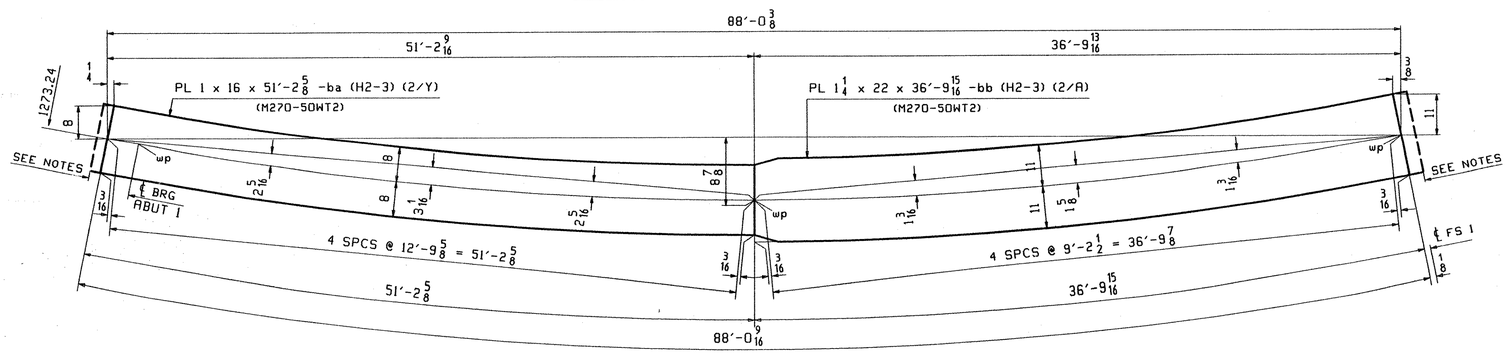

SECTION C-C FOR G3A BTM FLG

RECEIVED
OK'D BY DV OK'D BY
AUG 2 6 2002
RESUBMIT APPROVED
BY PRW DATE 9-17-02

NOTES:

1. FOR GENERAL NOTES, WELD DETAIL FA & FLG WIDTH TRANSITION WT SEE SHT. GN1.
2. TRIM FLANGES AFTER WELDING TO WEB.
3. H2-3 DENOTES MATERIAL SUBJECT TO CHARPY V-NOTCH TEST AT H FREQ. FOR ZONE 2 OF 15lbs @ 40 °F

REV.	REMARKS	DATE	DWN	CHK	APP	Q.A.	NO.	DIA.	LGT	TYPE	WASHER
	OUT FOR APPROVAL	8-23-02									
	OUT FOR APPROVAL										
	ISSUED TO SHOP										
	FIELD & OFFICE										

MATERIAL: M270-50W
ELECTRODES:
HOLES:
SHOP BOLTS:

SURFACE PREP. & PAINT:
-STEEL WITHIN 10'-0 ENDS OF GIRDERS SHALL BE PAINTED (SEE GN1)
-ALL OTHER STEEL SHALL BE BLAST CLEANED AND LEFT UNPAINTED.

DESCRIPTION: FLANGE DIAGRAM "A" GIRDERS
JOB: VT RTE 9 OVER THE DEERFIELD RIVER
BRIDGE NO. 25
SEARSBURG, VERMONT
CONTRACTOR: J.A. McDONALD
TENSOR 2241
PROJ NO. PROJ. NHF 010-1(18)
CUSTOMER: VERMONT AGENCY OF TRANSPORTATION

DRAWN BY	ATD
DATE	07/31
CHKD BY	
DO	08/09
APPROV BY	
SUPERVISOR	W. J. GATTI
Q.A.	

CASCO BAY STEEL STRUCTURES, INC.
75 SPRING HILL ROAD SACO, MAINE 04072
PHONE (207) 282-7360 FAX. (207) 282-1179

JOB NO. 165
DRG. NO. F1
REV. △

607 BR 25-F1

DO Mon Aug 12 07:39:43 EDT 2002 /users/jake/2241/f1 Rev0