INDEX OF SHEETS

SEE SHEET #2

STATE OF VERMONT
AGENCY OF TRANSPORTATION

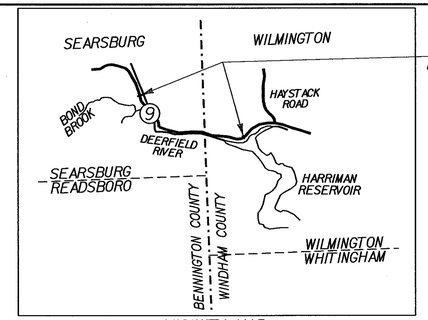

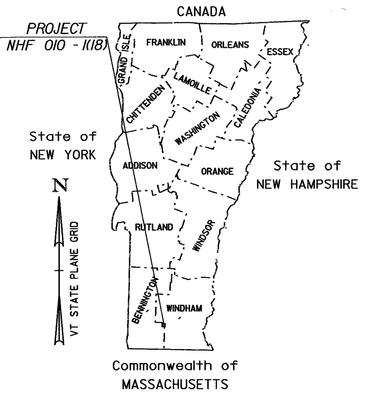

PROPOSED IMPROVEMENT

TOWN OF SEARSBURG & WILMINGTON

COUNTIES OF BENNINGTON & WINDHAM

VT. ROUTE 9

PRINCIPAL ARTERIAL

BEGINNING AT A POINT APPROXIMATELY 3.541 MILES EASTERLY OF WOODFORD - SEARSBURG TOWN LINE AND EXTENDING SOUTHEASTERLY 3.670 MILES TO A POINT ON EXISTING VT. RTE. 9 APPROXIMATELY 1.747 MILES EASTERLY OF THE SEARSBURG - WILMINGTON TOWN LINE.

LENGTH OF ROADWAY	18,525.49 FEET =	3.508 MILES
LENGTH OF BRIDGES	855.46 FEET =	0.162 MILES
LENGTH OF PROJECT	19,380.95 FEET =	3.670 MILES

WORK TO BE PERFORMED UNDER THIS PROJECT INCLUDES GRADING, DRAINAGE, SUBBASE AND PAVEMENT FOR A STATE HIGHWAY PARTLY ON NEW LOCATION, INCLUDING THREE BRIDGES CROSSING OVER THE DEERFIELD RIVER AND A RIGID FRAME OVER BOND BROOK.

TRAFFIC DATA	2000	2020
ADT	4420	6010
DHV	785	1070
ADTT	540	855
% D	52	52
% T	10.0	11.0
FLEXIBLE ESAL's	2000 - 2020 7,115,000	2000 - 2040 18,973,000
	DESIGN SPEED (V) = 50 M.P.H.	

BITUMINOUS CONCRETE PAVEMENT SUPERPAVE MIXTURE DESIGN CRITERIA	
DESIGN LIFE ESALS	7,115,000
DESIGN NUMBER OF GYRATIONS	100
PERFORMANCE GRADED ASPHALT BINDER	PG 58-28

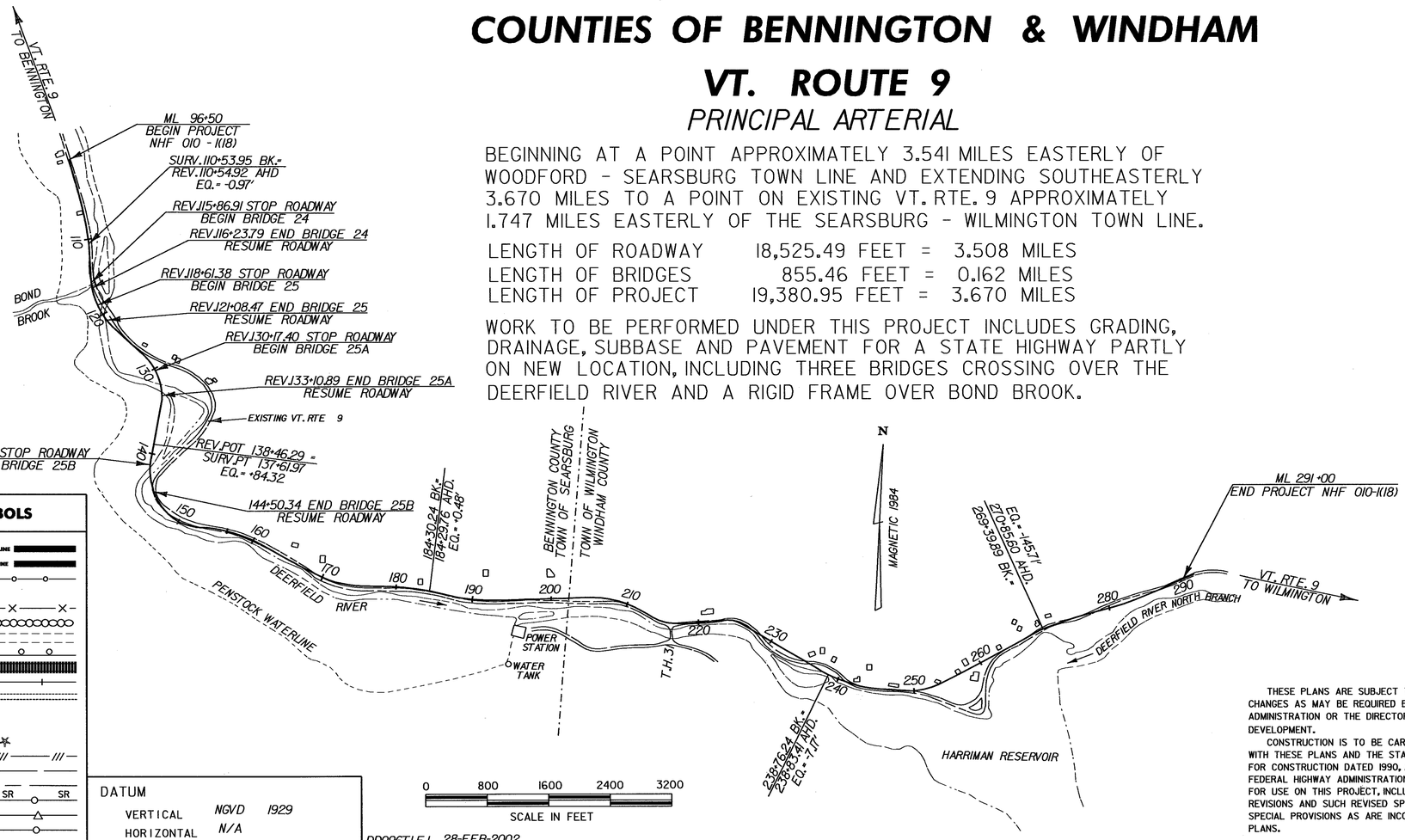

CONVENTIONAL SYMBOLS

COUNTY LINE
TOWN LINE
LIMITS OF ACCESS
POINT OF ACCESS
FENCE LINE
STONE WALL
TRAVELED WAY
GUARD RAIL
RAILROAD
SURVEY LINE
CULVERT
POWER POLE
TELEPHONE POLE
TREES
CONTROL OF ACCESS
PROPERTY LINE
R.O.W. TAKING LINE
SLOPE RIGHTS (SR SR SR)
TOP OF CUT
TOE OF SLOPE

DATUM
VERTICAL NGVD 1929
HORIZONTAL N/A

DD096TLEJ 28-FEB-2002

THESE PLANS ARE SUBJECT TO SUCH ENGINEERING CHANGES AS MAY BE REQUIRED BY THE FEDERAL HIGHWAY ADMINISTRATION OR THE DIRECTOR OF PROJECT DEVELOPMENT.

CONSTRUCTION IS TO BE CARRIED ON IN ACCORDANCE WITH THESE PLANS AND THE STANDARD SPECIFICATIONS FOR CONSTRUCTION DATED 1990, AS APPROVED BY THE FEDERAL HIGHWAY ADMINISTRATION ON MARCH 15, 1990 FOR USE ON THIS PROJECT, INCLUDING ALL SUBSEQUENT REVISIONS AND SUCH REVISED SPECIFICATIONS AND SPECIAL PROVISIONS AS ARE INCORPORATED IN THESE PLANS.

DIRECTOR OF PROJECT DEVELOPMENT
APPROVED _____ DATE 2/26/02

PROJECT MANAGER : G.H.DUBRAY

PROJECT NAME : SEARSBURG - WILMINGTON
PROJECT NUMBER : NHF 010 - 1(18)

SHEET 1 OF 435 SHEETS

INDEX OF SHEETS

1.	TITLE SHEET
2.	INDEX OF SHEETS
3-5.	TYPICAL SHEETS
6.	TIES AND BENCHMARKS
7-12.	QUANTITY SHEETS
13-17.	ITEM DETAIL AND DRAINAGE SHEET
18-23.	EARTHWORK SHEETS
24.	STONE FILL, TYPE IV (MOD.) EARTHWORK SHEET
25-28.	BLANK
29-59.	R.O.W. DETAIL SHEETS
60.	BLANK
61-80.	PLAN AND PROFILE SHEETS
81-92.	TRAFFIC SIGN AND PAVEMENT MARKING SHEETS
93.	GABION WALL DETOUR TRAFFIC CONTROL PLAN.
94-95.	BLANK
96-109.	GENERAL SHEETS FOR BRIDGES 24, 25, 25A, AND 25B (BR SERIES)
110.	BLANK
111-125.	BRIDGE 24 (BR 100 SERIES)
126-164.	BRIDGE 25 (BR 200 SERIES)
165-201.	BRIDGE 25A (BR 300 SERIES)
202-233.	BRIDGE 25B (BR 400 SERIES)
234-236.	BLANK
237.	BRIDGE 26
238.	BRIDGE 27
239-246.	CATAMOUNT TRAIL WALL (BR 500 SERIES)---RETAINING WALL #1
247-254.	MORSE RETAINING WALL (BR 600 SERIES)---RETAINING WALL #2
255-257.	BLANK
258.	SEQUENCE FOR CONSTRUCTING BRIDGES AND ENBANKMENTS ON THE WEST SIDE OF THE RIVER.
259.	BLANK
260-276.	TRAFFIC CONTROL SHEETS (INCLUDES CONSTRUCTION PHASING DETAILS FOR BRIDGES 24 AND 25, THE CATAMOUNT TRAIL RETAINING WALL, AND WORK ZONE SIGNING)
277.	BLANK
278-283.	TEMPORARY DETOUR FOR GABION WALLS
284.	PLAN AND PROFILE FOR GABION WALL AT STA. 145+68 TO 147+26 RT
285.	PROFILE FOR GABION WALL AT STA. 149+75 TO 152+25 RT
286.	TYPICAL SECTION FOR GABION WALLS
287.	GEOSYNTHETIC REINFORCED SLOPE DETAIL
288.	GATE DETAIL
289-303.	WETLANDS & RARE AND ENDANGERED SPECIES SHEETS
304-318.	EROSION CONTROL DETAILS
319-330.	WETLAND MITIGATION PLAN (INCLUDES MITIGATION SITE CONSTRUCTION APPROACH SIGNING)
331-332.	CHANNEL RIGHTS CROSS SECTIONS
333-427.	MAINLINE CROSS SECTION SHEETS
428-429.	WEST CONNECTOR CROSS SECTION SHEETS
430-432.	EAST CONNECTOR CROSS SECTION SHEETS
433-434.	DRIVE ALONG EAST CONNECTOR CROSS SECTIONS
435.	CUL-DE-SAC CROSS SECTION SHEET

A-60	SLOPES IN SOLID ROCK EXCAV. (50MPH & OVER)	06-01-94
A-62	SLOPES IN SOLID ROCK EXCAV. (400 VPD & OVER)	06-30-95
A-76	STANDARS FOR TOWN & DEVELOPMENT ROADS	03-10-95
B-1	BANKING TABLES	06-01-94
B-5	SLOPE GRADING, EMBANKMENTS, MUCK	06-01-94
B-11	UNDERDRAIN - ROCK SUBGRADE, SLOPE STABILIZ.	06-01-94
B-71	RESIDENTIAL AND COMMERCIAL DRIVES	11-16-00
C-1	CURBS, BITUMINOUS CONCRETE SIDEWALKS	01-03-00
	GRANITE SLOPE EDGING	
	VERTICAL GRANITE CURB	
	PRECAST REINFORCED CONCRETE CURB	
	CAST IN PLACE CONCRETE CURB	
	BITUMINOUS CONCRETE CURB	
	TREATED TIMBER CURB	
D-1	PRECAST RCP DROP INLET	06-01-94
	REINFORCED CONCRETE PIPE D.I. W/ CAST IRON GRATE	
	REINFORCED CONCRETE PIPE D.I. W/ CONCRETE COVER	
D-2	C.R.M. HEADWALLS, UNDERDRAIN	06-01-94
	C.R.M. HEADWALLS & RETAINING WALLS	
	RIPRAP LIGHT TYPE SLOPE HEADWALL	
	REINFORCED CONCRETE HEADWALL	
	UNDERDRAIN & CARRIER PIPE CONSTRUCTION DETAILS	
D-3	TREATED GUTTERS	06-01-94
D-4	FLUSHING BASINS, END SECTION, ELBOWS	06-01-94
	TYPICAL WATERFALL FOR CULVERTS UP TO AND INCLUDING 48'' DIA.	
	EXTENSION SERVICE BOX AND CURB STOP	
	CORRUGATED PIPE ELBOW	
	GRANULAR BORROW AT CULVERT LOCATIONS	
	UNDERDRAIN FLUSHING BASIN	
	CORRUGATED STEEL PIPE END SECTION	
	CORRUGATED STEEL PIPE ARCH END SECTION	
D-6	REINF. CONCRETE DROP INLET W/GRATE (DITCHES)	06-01-94
D-15	CAST IRON GRATE WITH FRAME, TYPE, D & E WITH CAST IRON GRATE	06-01-94
D-16	PRECAST CURB DI, GRATE, RCP END SECTION, ETC.	06-01-94
	CAST IRON GRATE, TYPE B	
	CAST IRON GRATE, TYPE C	
	UNDERDRAIN RISER	
	REINFORCED CONCRETE PIPE END SECTION	
	ENERGY DISSIPATOR FOR CULVERT	
D-17	CGM DROP INLET, REDUCER, RISER	06-01-94
D-20	HIGHWAY CROSSING FOR UNDERGROUND UTILITIES	03-10-95
E-100	CONSTRUCTION APPROACH SIGNS	01-06-97
E-100A	SIDE ROAD CONSTRUCTION APPROACH SIGNING	01-06-97
E-101	CONSTRUCTION SIGN DETAILS	03-10-97
E-102	CONSTRUCTION SIGN DETAILS	08-08-95
E-102A	CONSTRUCTION SIGN DETAILS	08-08-95
E-103	MAINLINE TRAFFIC CONTROL	09-23-98
E-106	TRAFFIC CONTROL - MISCELLANEOUS DETAILS	08-08-95
E-107	DELINEATION, BARRICADES AND DETOURS FOR CONSTRUCTION AREAS	08-08-95
E-107A	BREAKAWAY BARRICADE DETAILS	08-08-95
E-108	CONSTRUCTION ZONE LONGITUDINAL DROP OFFS	08-18-95
E-110	MAJOR MAINTENANCE OPERATION LANE CLOSURE	08-08-95
E-112	TRAFFIC CONTROL FOR TYPICAL MOVING MAINTENANCE OPERATIONS	01-23-97
E-120	STANDARD SIGN PLACEMENT - EXPRESSWAY & FREEWAY	08-08-95
E-121	STANDARD SIGN PLACEMENT - CONVENTIONAL ROAD	08-08-95
E-123	GUIDE SIGN PLACEMENT - MISCELLANEOUS DETAILS	08-08-95
E-124	TOWN LINE SIGNS	08-08-95
E-125	TRAVEL INFORMATION SIGNS	08-08-95

E-127	ROUTE MARKINGS AT RURAL INTERSECTIONS	08-08-95
E-132	GENERAL MOTORIST SERVICE SIGN DETAILS	08-18-95
E-134	BRIDGE NUMBER PLAQUE	08-08-95
E-136B	STATE ROUTE MARKER-SIGN DETAILS	08-08-95
E-138	MILEMARKER DETAILS STATE & TOWN HIGHWAYS	08-08-95
E-141	REGULATORY SIGN DETAILS	09-20-95
E-143	REGULATORY SIGN DETAILS	09-20-95
E-144	REGULATORY SIGN DETAILS	03-29-99
E-150	WARNING SIGN DETAILS	01-15-97
E-151	WARNING SIGN DETAILS	08-08-95
E-152	WARNING SIGN DETAILS	08-08-95
E-153	WARNING SIGN DETAILS	01-15-97
E-155	WARNING SIGN DETAILS	08-08-95
E-160	FLANGED CHANNEL STEEL SIGN POST	05-20-99
E-175	POWER DROP STANCHIONS	11-17-93
E-191	PAVEMENT MARKING DETAILS	02-01-99
E-192	PAVEMENT MARKING DETAILS	10-12-00
E-193	PAVEMENT MARKING DETAILS	08-18-95
F-1	WOVEN WIRE FENCE	06-01-94
	WITH WOOD POSTS	
	WITH STEEL POSTS	
	WOOD BRACE FOR WOVEN WIRE FENCE	
	STEEL BRACE FOR WOVEN WIRE FENCE	
	DRIVE GATE FOR WOVEN WIRE FENCE	
	WALK GATE FOR WOVEN WIRE FENCE	
F-2	CHAIN LINK FENCE (TYPE I)	06-01-94
	DRIVE GATE FOR CHAIN-LINK FENCE (TYPE I)	
	WALK GATE FOR CHAIN-LINK FENCE (TYPE I)	
F-4	CHAIN LINK FENCE (TYPE I)	06-01-94
	DRIVE GATE FOR CHAIN-LINK FENCE (TYPE I)	
	WALK GATE FOR CHAIN-LINK FENCE (TYPE I)	
G-1	STEEL BEAM GUARDRAIL WITH STEEL POSTS	01-03-00
	STEEL BEAM GUARDRAIL WITH WOOD POSTS	
G-1B	BOX BEAM GUARD RAIL	06-01-94
G-1D	STEEL BEAM GUARDRAIL APPROACH END TERMINAL	01-03-00
	STEEL BEAM GUARDRAIL TRAILING END TERMINAL	
	ANCHOR FOR STEEL BEAM RAIL	
	STEEL BEAM MEDIAN BARRIER	
G-4	MARKERS - GUIDE POSTS - PLANK GUARD RAIL	06-01-94
	PLANK RAIL	
	GUIDE POSTS	
	WOOD MARKER POSTS	
	STEEL MARKER POSTS	
G-5	CEDAR LOG RAIL	06-01-94
G-6	CABLE GUARD RAIL (WITH STEEL POSTS)	01-01-94
	ANCHOR FOR CABLE RAIL	
G-10	ANCHER FOR CABLE RAIL AT OPENING	02-23-95
G-16	STEEL BEAM GUARDRAIL ATTACHMENTS TO EXISTING BRIDGE	06-01-94
	TERMINAL CONNECTOR FOR STEEL BEAM GUARDRAIL	
G-17A	MODIFIED ECCENTRIC LOADER TERMINAL (MELT)	01-18-96
G-17B	MODIFIED ECCENTRIC LOADER TERMINAL (MELT)	06-30-95
G-18	PRECAST CONCRETE TEMPORARY TRAFFIC BARRIER	06-01-94
J-1	PROJECT AND BOUNDARY MARKERS	06-01-94
J-3	MAILBOX SUPPORT DETAIL	08-07-95
T-1	TEMPORARY EROSION CONTROL DETAILS	06-01-94
T-2	TEMPORARY EROSION CONTROL DETAILS	06-01-94

SURVEYED BY _____ DATE _____
DRAWN BY SQD B DATE 5-99
SQUAD LEADER DELLA SANTA
DESIGN FILE NO. /78D096/DESIGN/DD096.DGN
IPARM FILE DD096IND DATE PLOTTED 28-FEB-2002
PROJ. NAME SEARSBURG-WILMINGTON
PROJ. NO. NHF 010-1(18)
SHEET 2 OF 435 SHEETS

VT. ROUTE 9 TYPICAL SECTIONS

6 1/4" BITUMINOUS CONCRETE PAVEMENT (TWO 1 3/4" LIFTS TYPE III S OVER 2 3/4" TYPE II S) (PG 58-28)
3 1/2" BASE COURSE OF BITUMINOUS CONCRETE PAVEMENT (3 1/2" LIFT, TYPE I S) (PG 58-28)
24" SUBBASE OF DENSE GRADED CRUSHED STONE
24" SAND BORROW (ONLY 3" REQUIRED IN LEDGE CUT)
SHOULDERS: 6 1/4" BITUMINOUS CONCRETE PAVEMENT (TWO 1 3/4" LIFTS TYPE III S OVER 2 3/4" TYPE II S) (PG 58-28)

MATERIAL ITEM	THICKNESS TOLERANCE
PAVEMENT	± 1/4"
SUBBASE	± 1"
SAND BORROW	± 1"

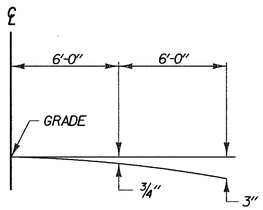

PARABOLIC DETAIL : ROUTE 9

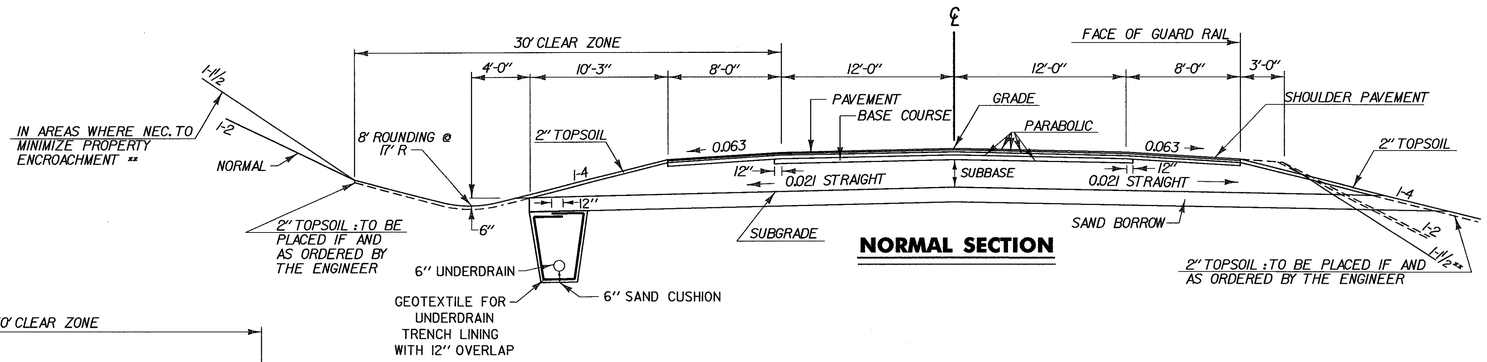

NORMAL SECTION

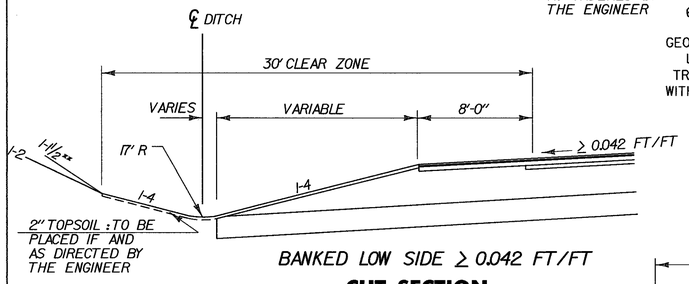

BANKED LOW SIDE ≥ 0.042 FT/FT

CUT SECTION

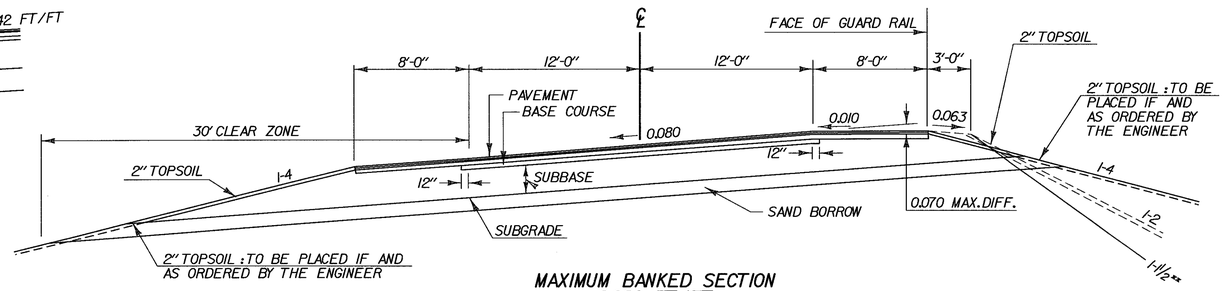

MAXIMUM BANKED SECTION
0.080 FT/FT

FILL SECTION

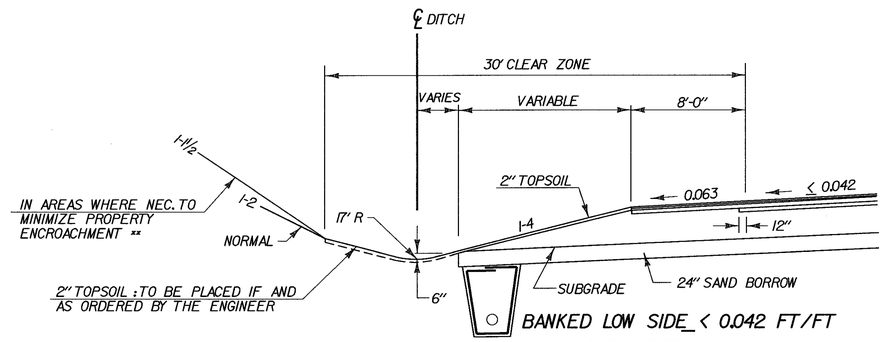

BANKED LOW SIDE ≤ 0.042 FT/FT

CUT SECTION

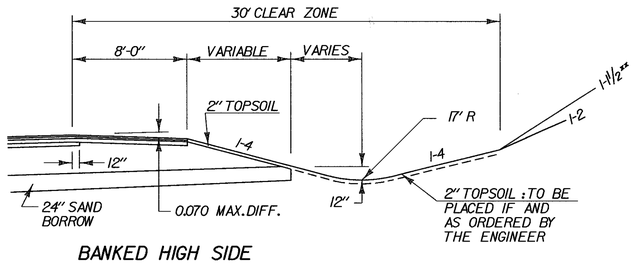

BANKED HIGH SIDE

CUT SECTION

** FOR LIMITS OF STONE FILL AND/OR ROCK EMBANKMENTS SEE CROSS SECTIONS

NOT TO SCALE

SEEDING FORMULA
URBAN AREAS

% WT.	LBS./A.	NAME	PUR %	GERM %
42.5	34.0	CREEPING RED FESCUE	98	85
10.0	8.0	PERENNIAL RYE GRASS	95	90
42.5	34.0	KENTUCKY BLUE GRASS	85	85
5.0	4.0	ANNUAL RYE GRASS	95	85
100.00	80.0			

SEEDING FORMULA
RURAL AREAS

% WT.	LBS./A.	NAME	PUR %	GERM %
37.5	22.5	CREEPING RED FESCUE	98	85
37.5	22.5	TALL FESCUE	95	90
5.0	3.0	RED TOP	95	90
15.0	9.0	BIRDSFOOT TREFOIL	98	85
5.0	3.0	ANNUAL RYEGRASS	95	85
100.0	60.0			

GENERAL NOTES

SEED MIXTURE: SHALL NOT HAVE A WEED CONTENT EXCEEDING 0.40% BY WEIGHT AND SHALL BE FREE OF ALL NOXIOUS SEED.

SEED: TO BE APPLIED PER SEEDING FORMULAS OR AS DIRECTED BY THE ENGINEER.

FERTILIZER: FORMULA 10-20-10, TO BE USED WITH SEED, APPLIED AT THE RATE OF 500 LBS./ACRE. (HYDRO SEEDERS MAY USE 19-19-19 FORMULA).

AGRICULTURAL LIMESTONE: TO BE APPLIED AT THE RATE OF 2 TONS/ACRE, OR AS DIRECTED BY THE ENGINEER.

HAY MULCH: TO BE PLACED ON EARTH SLOPES AT THE RATE OF 2 TONS/ACRE, OR AS DIRECTED BY THE ENGINEER.

TOPSOIL: TO BE USED WITH SEED AS INDICATED ON THE PLANS, OR AS DIRECTED BY THE ENGINEER.

MARKER POSTS: TO BE PLACED AS INDICATED OR AS DIRECTED BY THE ENGINEER.

SLOPE ROUNDING: ALL CUT SLOPES TO BE ROUNDED IN ACCORDANCE WITH STANDARD SHEET B-5.

PAY LIMITS OF SAND BORROW: WHEN USED IN CONJUNCTION WITH UNDERDRAIN - SEE STANDARD SHEET D - 2.

TACK COAT: EMULSIFIED ASPHALT IS TO BE APPLIED AT THE RATE OF 0.015 GAL/SY BETWEEN SUCCESSIVE COURSES OF PAVEMENT AS DIRECTED BY THE ENGINEER.

DATUM	
VERTICAL	NGVD 1929
HORIZONTAL	N/A

PROJECT: **SEARSBURG-WILMINGTON**	PROJECT NO.: **NHF 010 - 1 (18)**
DESIGN FILE NAME: /78D096/DESIGN/DD096TYP.DGN	
IPARM FILE NAME: DD096TYI	PLOT DATE: 15-FEB-2002
SURVEYED BY:	SURVEY DATE:
SQUAD LEADER: DELLA SANTA	DRAWN BY: SQUAD B
	SHEET: 3 OF 435

VT. ROUTE 9 SIDEROAD TYPICAL SECTIONS

MATERIAL ITEM	THICKNESS TOLERANCE
PAVEMENT	± 1/4"
SUBBASE	± 1"
SAND BORROW	± 1"

1¾" BITUMINOUS CONCRETE PAVEMENT, TYPE IIIS (PG 58-28)

3½" BASE COURSE OF BITUMINOUS CONCRETE PAVEMENT, TYPE IS (PG 58-28)

18" SUBBASE OF DENSE GRADED CRUSHED STONE

SHOULDERS : 1¾" BITUMINOUS CONCRETE PAVEMENT, TYPE IIIS (PG 58-28)

0" - 24" SAND BORROW (IN CUTS): TO BE PLACED AS NOTED ON THE PLANS OR AS DIRECTED BY THE ENGINEER

NOTES:

1. MAXIMUM BANK OF EAST CONNECTOR IS 0.040 FT/FT
2. REFER TO STANDARD SHEET A-61

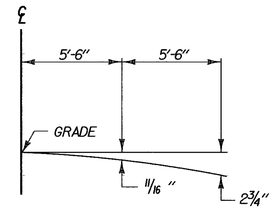

PARABOLIC DETAIL CONNECTOR ROADS

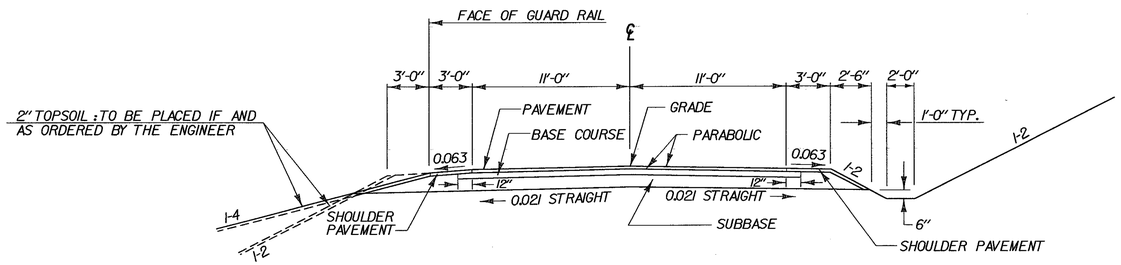

NORMAL SECTION

ROUTE 9 WEST, EAST, & EAST DRIVE CONNECTORS

OVERLAY (22' WIDE)

1¾" BITUMINOUS CONCRETE PAVEMENT, TYPE IIIS (PG 58-28)

LOCATIONS: FROM WEST CONNECTOR 24+00 TO CUL-DE-SAC 71+26
FROM EAST CONNECTOR 13+00 TO EAST DRIVE CONNECTOR 21+70

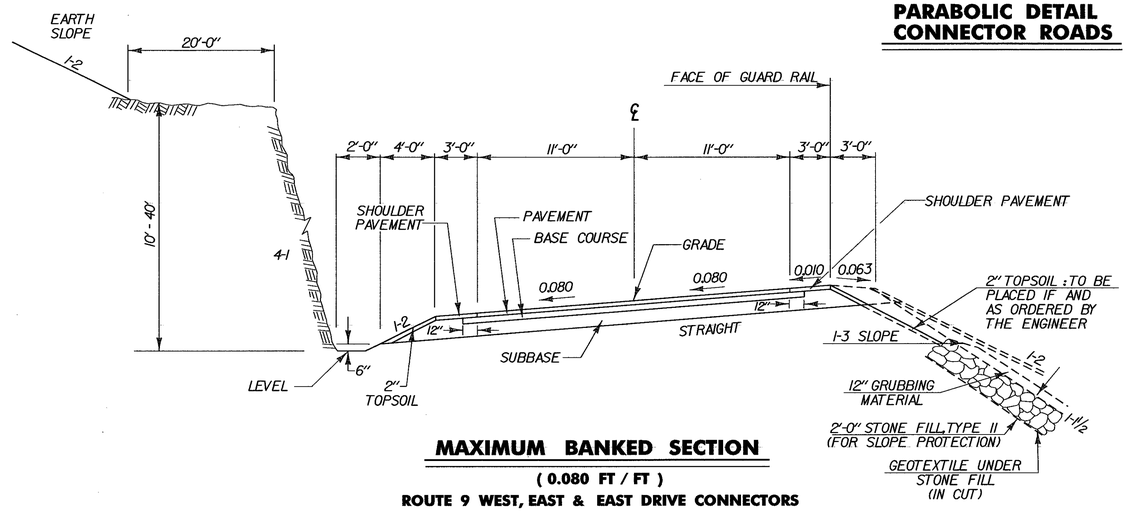

MAXIMUM BANKED SECTION

(0.080 FT / FT)

ROUTE 9 WEST, EAST & EAST DRIVE CONNECTORS

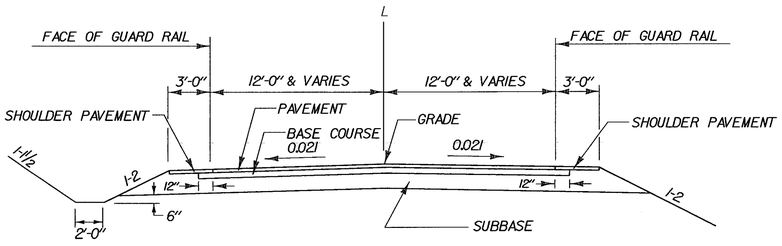

TOWN HIGHWAY 31

COLD PLANING LIMITS AT APPROACHES

INCLUDES SHOULDERS

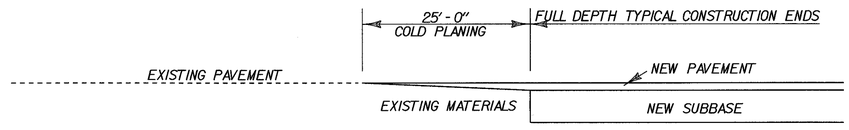

NOT TO SCALE

PROJECT: SEARSBURG - WILMINGTON	PROJECT NO.: NHF 010 - 1 (18)
DESIGN FILE NAME: /78D096/DESIGN/DD096TYP.DGN	
IPARM FILE NAME: DD096TY2	PLOT DATE: 05-FEB-2002
SURVEYED BY:	SURVEY DATE:
SQUAD LEADER: DELLA SANTA	DRAWN BY: SQUAD B
	SHEET: 4 OF 435

MISC. TYPICAL SHEET

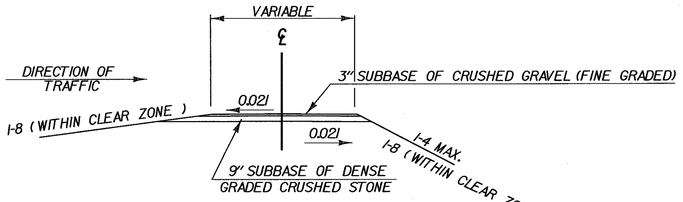

GRAVEL DRIVE IN FILL

TYPE (A – 1)

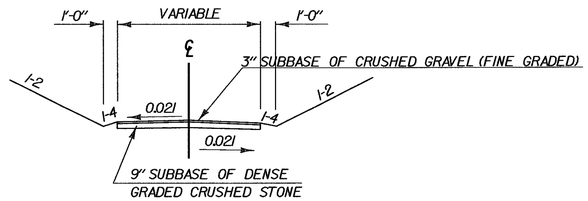

GRAVEL DRIVE IN CUT

TYPE (A – 2)

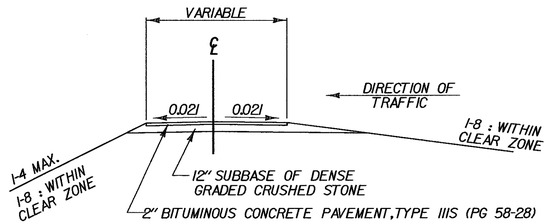

BITUMINOUS CONCRETE DRIVE IN FILL *

TYPE (B – 1)

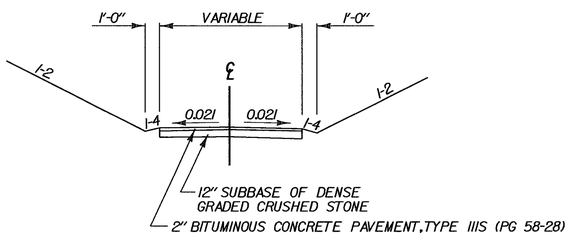

BITUMINOUS CONCRETE DRIVE IN CUT *

TYPE (B – 2)

*** ALSO TYPICAL FOR CUL-DE-SAC**

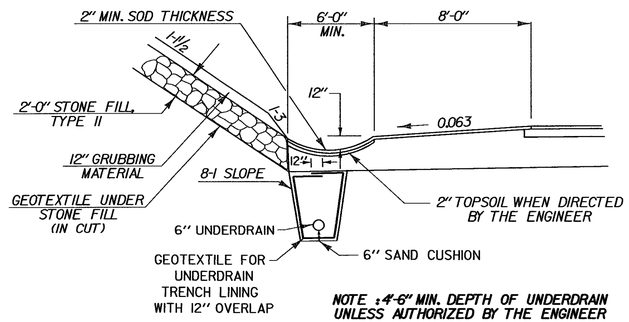

NOTE : 4'-6" MIN. DEPTH OF UNDERDRAIN UNLESS AUTHORIZED BY THE ENGINEER

CUT SECTION

SODDED DITCHES

STA. 150+50 LT. TO 154+50 LT. (NO ROCK)
STA. 219+50 LT. TO 223+00 LT. (NO ROCK)
STA. 243+00 LT. TO 243+35 LT.
STA. 263+59 LT. TO 268+50 LT.

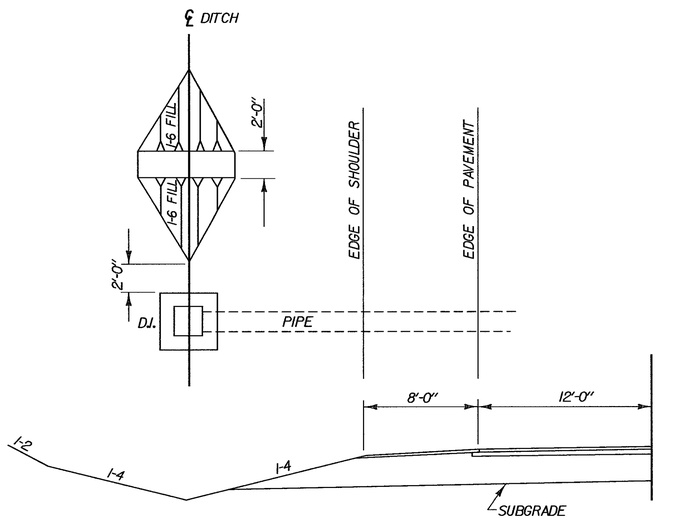

TYPICAL DITCH CHECK DETAIL

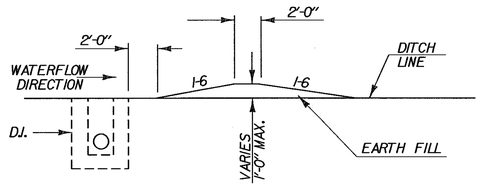

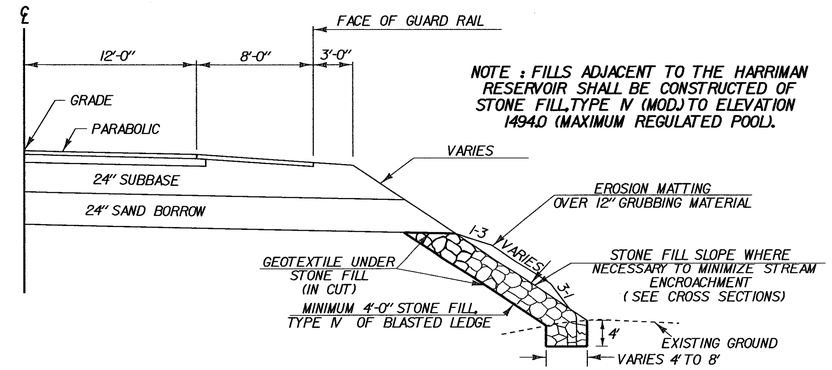

NOTE : FILLS ADJACENT TO THE HARRIMAN RESERVOIR SHALL BE CONSTRUCTED OF STONE FILL,TYPE IV (MOD.) TO ELEVATION 1494.0 (MAXIMUM REGULATED POOL).

STANDARD TYPICAL FOR STONE FILL, TYPE IV (MOD.) SLOPES

(FOR WHERE SELECTED BLASTED LEDGE FROM THIS PROJECT IS TO BE USED)

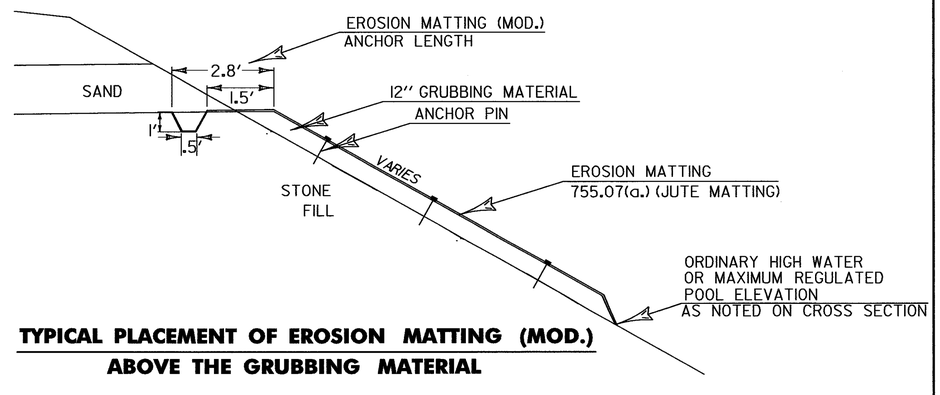

TYPICAL PLACEMENT OF EROSION MATTING (MOD.) ABOVE THE GRUBBING MATERIAL

WHERE TEMPORARY TRAFFIC BARRIER IS REQUIRED EVERY IOTH SECTION WILL BE THIS MODIFIED BARRIER TO ALLOW SMALL ANIMALS TO CROSS UNDERNEATH.

TEMPORARY TRAFFIC BARRIER---MODIFIED
TUNNEL PASSAGEWAY FOR SMALL ANIMALS

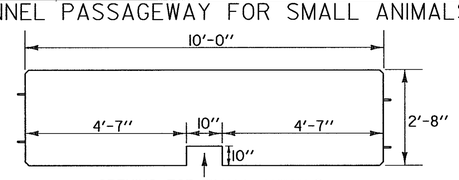

ELEVATION VIEW
NOT TO SCALE

NOT TO SCALE

PROJECT: **SEARSBURG – WILMINGTON**	PROJECT NO.: **NHF 010 – 1 (18)**
DESIGN FILE NAME: */78D096/DESIGN/DD096TYP.DGN*	
IPARM FILE NAME: *DD096TY3*	PLOT DATE: 19-FEB-2002
SURVEYED BY:	SURVEY DATE:
SQUAD LEADER: *DELLA SANTA*	DRAWN BY: *SQUAD B*
	SHEET: *5* OF *435*

CENTERLINE CONTROL TIES

			CURVE #6 P.C. 156+65.82 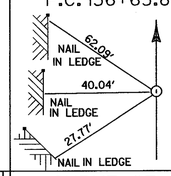	P.I. CURVE #6 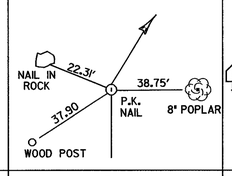	CURVE #6 P.T. 161+44.93 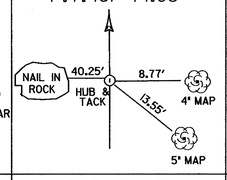	CURVE #13 P.C. 238+76.24 BK= P.C. 238+83.41 AHD 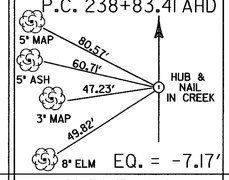 EQ. = -7.17'	P.I. CURVE #13 (NOT SET) 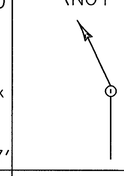	CURVE #13 P.T. 245+39.99 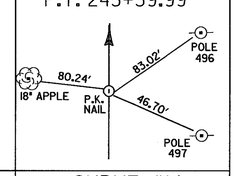
P.C. = 87+07.17 OFF PROJECT N.= 10847.90 E.= 49699.47	P.I. = 93+64.19 = 93+58.48 OFF PROJECT N.= 10243.48 E.= 49957.07	P.T. = 100+15.50 N.= 9596.44 E.= 50071.16	CURVE #7 P.C. 170+71.74 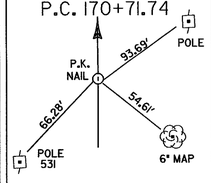	P.I. CURVE #7 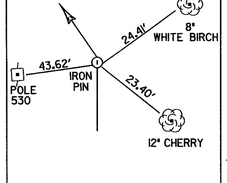	CURVE #7 P.T. 176+29.08 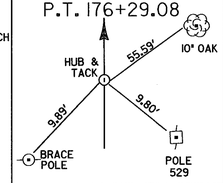	CURVE #14 P.C. 250+37.91 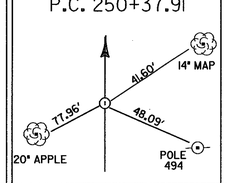	P.I. CURVE #14 (NOT SET) 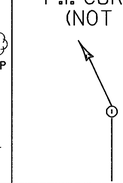	CURVE #14 P.T. 256+13.63 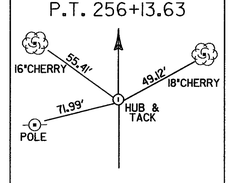
CURVE #2 P.C. = 104+44.74 N.= 9173.72 E.= 50145.69	CURVE #2 P.I. = 107+50.49 = 107+48.20 N.= 8872.61 E.= 50198.79	CURVE #2 P.T. = 110+53.95 = REV.POT 110+54.92 EQ. -0.97' N.= 8567.08 E.= 50187.14	CURVE #8 P.C. 178+81.56 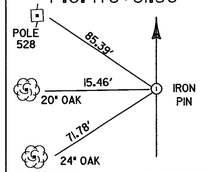	P.I. CURVE #8 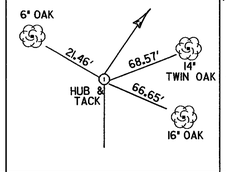	P.T. 184+30.24 BK. P.T. 184+29.76 AHD. EQ. = +0.48 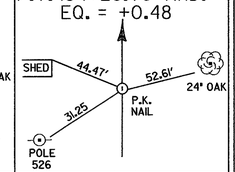	CURVE #15 P.C. 269+39.89 BK= P.C. 270+85.60 AHD 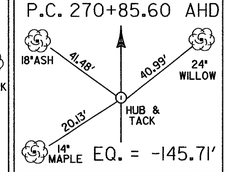 EQ. = -145.71'	P.I. CURVE #15 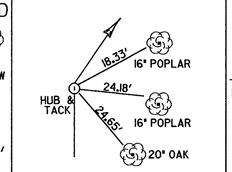	CURVE #15 P.T. 276+01.37 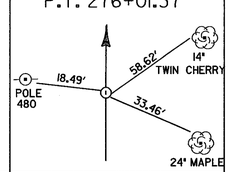
CURVE #3 REV. P.C. 113+61.81 N.= 8260.41 E.= 50175.44	CURVE #3 REV.P.I. 118+47.54 = 118+04.14 N.= 7775.03 E.= 50156.93	CURVE #3 REV.P.T. 122+89.88 N.= 7400.65 E.= 50466.41	CURVE #9 P.C. 189+63.37 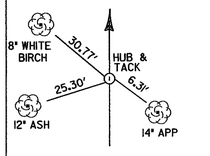	P.I. CURVE #9 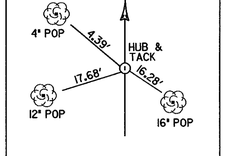	CURVE #9 P.T. 195+16.87 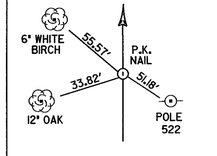	CURVE #16 P.C. 279+26.35 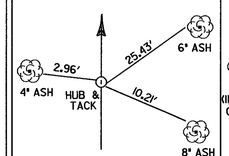	P.I. CURVE #16 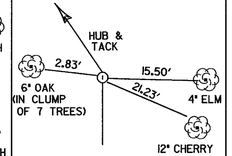	CURVE #16 P.T. 283+78.92 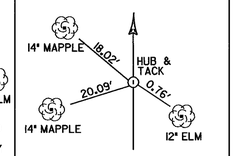
CURVE #4 REV. P.C. 127+03.13 N.= 7082.14 E.= 50729.71	CURVE #4 REV.P.I. 131+08.71 = 130+43.25 N.= 6769.55 E.= 50988.12	CURVE #4 REV.P.T. 134+48.83 N.= 6380.37 E.= 50873.96	CURVE #10 P.C. 205+82.23 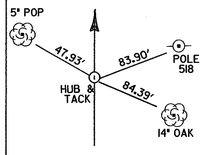	P.I. CURVE #10 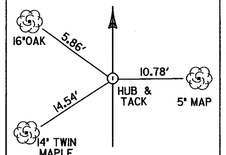	CURVE #10 P.T. 211+75.05 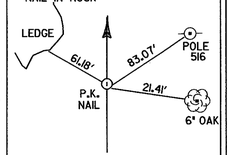	SURVEY ℄ 290+89.87 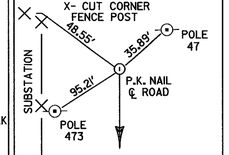		
REV.POT. 138+46.29= SURV. P.T. 137+61.97 EQ. +84.32' 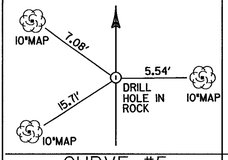			CURVE #11 P.C. 214+15.31 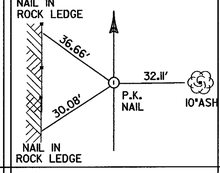	P.I. CURVE #11 (NOT SET) 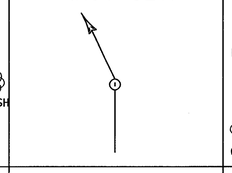	CURVE #11 P.T. 218+43.48 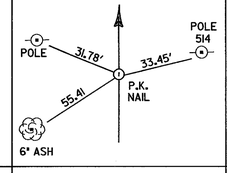	ROUTE 9 CONNECTOR 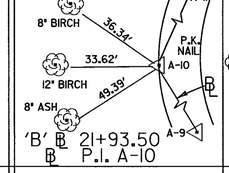 'B' ℄ 21+93.50 ℄ P.I. A-10	ROUTE 9 CONNECTOR 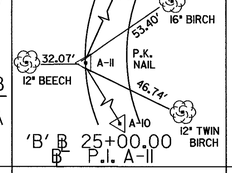 'B' ℄ 25+00.00 ℄ P.I. A-11	ROUTE 9 CONNECTOR 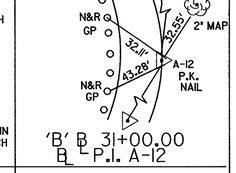 'B' ℄ 31+00.00 ℄ P.I. A-12
CURVE #5 P.C. 140+40.10 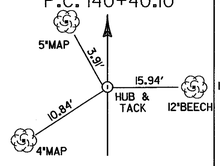	CURVE #5 SURV.P.I. 148+21.64 = 144+75.96 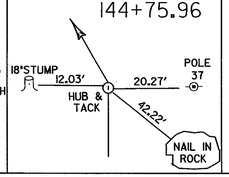	CURVE #5 P.C. 152+57.53 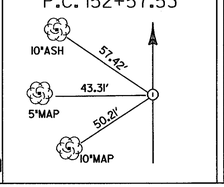	CURVE #12 P.C. 222+80.03 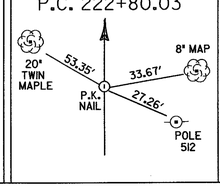	P.I. CURVE #12 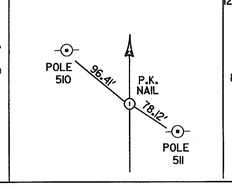	CURVE #12 P.T. 227+55.80 			

BENCH MARKS

NO.	DESCRIPTION	ELEV.
1.	R.R. SPIKE IN 18" PINE 25' +/- RT. OF ℄ STA. 97+90.	1668.77
2.	R.R. SPIKE IN 12" MAPLE 30' +/- RT OF ℄ ST. 105+95.	1658.51
	U.S.G.S. -P-14 BRASS DISK TOP WEST WINGWALL OF NORTH END OF CONC. ABUTMENT ON BRIDGE OVER DEERFIELD RIVER.	1638.21
3.	~~R.R. SPIKE IN 10" MAPLE 2' RT. OF ℄ STA. 127+60.~~ (VOID)	~~1620.41~~
4.	R.R. SPIKE IN POLE 119/46 35' +/- LT. OF ℄ STA. 134+90.	1633.09
5.	R.R. SPIKE IN 18" ASH 50' +/- LT. OF ℄ STA. 151+35.	1594.44
6.	R.R. SPIKE IN 12" POPAR 50' +/- LT. OF ℄ STA. 165+80.	1570.83
7.	R.R. SPIKE IN 20" OAK 20' +/- LT. OF ℄ STA. 178+75.	1551.68
8.	R.R. SPIKE IN 18" OAK 55' +/- RT. OF ℄ STA. 194+00.	1537.01
9.	R.R. SPIKE IN 20" MAPLE 10' +/- RT.OF ℄ STA. 207+80.	1526.22
10.	R.R. SPIKE IN 28" ASH 35' +/- LT. OF ℄ STA. 216+80.	1521.03
11.	□ CUT ON HIGH POINT OF ROCK LEDGE 50' +/- RT. OF STA. 233+40.	1507.91
12.	R.R. SPIKE IN 24" OAK 45" +/- RT. OF ℄ STA. 250+50.	1511.21
13.	R.R. SPIKE IN 24" OAK 280' +/- RT. OF ℄ STA. 259+30.	1510.69
	U.S.G.S. -M-14 BRASS DISK ON TOP OF WEST CONC. WINGWALL ON NORTH END OF CULVERT 100' LT. OF ℄ STA. 272+20.	1513.23
14.	R.R. SPIKE IN 16" MAPLE 30" +/- LT. OF ℄ STA. 281+45.	1519.34
15.	R.R. SPIKE IN POLE 56 AT EAST END OF SUB STATION OUTSIDE FENCE 80' +/- LT. OF ℄ STA 291+15.	1516.54

PROJECT NAME: **SEARSBURG - WILMINGTON**
PROJECT NUMBER: **NHF 010- 1(18)**

FILE NAME: dd096tie.i
PROJECT LEADER: DELLA SANTA
DESIGNED BY: SQUAD B
78d096/design/dd096typ.dgn

PLOT DATE: 23-MAY-2001
DRAWN BY: SQUAD B
CHECKED BY:
SHEET 6 OF 435

QUANTITY SHEET

STATE OF VERMONT
AGENCY OF TRANSPORTATION

APPROXIMATE SUMMARY OF QUANTITIES

DEERFIELD CHANNEL	NON-FED. PART.	GABION WALL STA.145+68 TO 147+28 RT	GABION WALL STA.148+75 TO 152+25 RT	BR 500 SERIES WALL NO.1	BR 600 SERIES WALL NO. 2	EROSION CONTROL	TRAINING	LAND-SCAPING	WETLAND MITIGAT.	BR 100 SERIES BR 24	BR 200 SERIES BR 25	BR 300 SERIES BR 25A	BR 400 SERIES BR 25B	BRIDGE NO. 26	BRIDGE NO. 27	ROADWAY	QUANTITIES GRAND TOTAL	UNIT	ITEMS	ITEM NO.	ROUNDING
																1	1	LS	CLEARING AND GRUBBING (INCLUDING INDIVIDUAL TREES AND STUMPS)	201.10	
									5								5	EA	REMOVING SMALL TREES (MOD) DEAD TREES	201.15	
																1	1	EA	DEMOLITION AND DISPOSAL OF BUILDING @ STA. 184+10	202.10	
																1	1	EA	DEMOLITION AND DISPOSAL OF BUILDING @ STA. 257+80	202.10	
			220						13602							225450	239272	CY	COMMON EXCAVATION	203.15	
									50							89150	89200	CY	SOLID ROCK EXCAVATION	203.16	
4150											1035	335	630	120	390	30	6690	CY	UNCLASSIFIED CHANNEL EXCAVATION	203.27	7
																1000	1000	CY	EXCAVATION OF SURFACES AND PAVEMENTS	203.28	68
																500	500	CY	EARTH BORROW (490 CY EST.)	203.30	
																75500	75500	CY	SAND BORROW	203.31	
									28								28	CY	SAND BORROW (MOD.)	203.31	
														230	560	11150	11940	CY	GRANULAR BORROW	203.32	
		100															100	CY	GRANULAR BORROW (MOD.)	203.32	
			950													139400	140350	SY	FINE GRADING-SUBGRADE	203.40	17
						400										10500	10900	CY	TRENCH EXCAVATION OF EARTH	204.20	
																2720	2720	CY	TRENCH EXCAVATION OF ROCK	204.21	
		550	1700	1080	1570									315	925	1350	7490	CY	STRUCTURE EXCAVATION	204.25	24
		150	100	1010	1700					2022	1555	1750	2840	95	118	1550	12890	CY	GRANULAR BACKFILL FOR STRUCTURES	204.30	59
													122				122	LF	DRILLING & BLASTING OF SOLD ROCK (MOD.)	205.10	
																22650	22650	LF	DRILLING AND BLASTING OF SOLID ROCK	205.10	52
																15100	15100	SY	DRILLING, AND BLASTING OF SOLID ROCK - SUBGRADE	205.20	54
										200	710	430	275				1615	CY	COFFERDAM, EXCAVATION EARTH	208.30	
										173	425	215	295				1108	CY	COFFERDAM, EXCAVATION ROCK	208.35	
										1							1	LS	COFFERDAM (@ BR. 24 ABUT. ONE LT)	208.40	
										1							1	LS	COFFERDAM (@ BR. 24 ABUT. ONE RT)	208.40	
										1							1	LS	COFFERDAM (@ BR. 24 ABUT. TWO LT)	208.40	
										1							1	LS	COFFERDAM (@ BR. 24 ABUT. TWO RT)	208.40	
											1						1	LS	COFFERDAM (@ BR. 25 PIER ONE)	208.40	
											1						1	LS	COFFERDAM (@ BR. 25 PIER TWO)	208.40	
												1					1	LS	COFFERDAM (@ BR. 25A PIER ONE)	208.40	
												1					1	LS	COFFERDAM (@ BR. 25A ABUT. TWO)	208.40	
													1				1	LS	COFFERDAM (@ BR. 25B PIER ONE)	208.40	
													1				1	LS	COFFERDAM (@ BR. 25B PIER TWO)	208.40	
																150	150	SY	COLD PLANING-BIT. PAVEMENT	210.10	37
		1400	200													5300	6900	SY	SCARIFYING PAVEMENT	212.20	76
																1500	1500	CY	SUBBASE OF CRUSHED GRAVEL (CRSE GRADED)	301.25	
																860	860	CY	SUBBASE OF CRUSHED GRAVEL (FINE GRADED)	301.26	
																74360	74360	CY	SUBBASE OF DENSE GRADED CRUSHED STONE	301.35	
																326	326	CWT	EMULSIFIED ASPHALT	404.65	
																1	1	LS	PRICE ADJUSTMENT ASPHALT CEMENT	406.50	
																42280	42280	TON	SUPERPAVE BITUMINOUS CONCRETE PAVEMENT (PG 58-28)	490.30	
										42	47	46					135	CY	CONCRETE, CLASS A (HPC-A)	501.22	
										270	325	337					932	CY	CONCRETE, CLASS A (QC/QA)	501.221	
										730	1593	1405	2176	32	30	120	6086	CY	CONCRETE, CLASS B (HPC-B)	501.25	1.8
				553	483												1036	CY	CONCRETE, CLASS B (HPC-B) (MOD.)	501.25	
											1						1	LS	FURNISHING EQUIPMENT FOR DRIVING PILING (@ BR. 25) (MOD.)	504.10	
												1					1	LS	FURNISHING EQUIPMENT FOR DRIVING PILING (@ BR. 25A) (MOD.)	504.10	
													1				1	LS	FURNISHING EQUIPMENT FOR DRIVING PILING (@ BR. 25B) (MOD.)	504.10	
											15	15					30	LF	CIP CONCRETE PILING (MOD.-ROCK)(5' DIA.)	505.25	
											31	75					106	LF	CIP CONCRETE PILING (MOD.-EARTH)(5' DIA.)	505.25	
											75		168				243	LF	CIP CONCRETE PILING (MOD.-EARTH)(8' DIA.)	505.25	
											6	3	4				13	EA	PILING LOADING TESTS (MOD.)	505.40	
											356000	528000	366000				1250000	LB	STRUCTURAL STEEL	506.55	

DETAILED SUMMARY OF QUANTITIES

QUANTITIES	UNIT	ITEMS
		COMMON EXCAVATION
213587	CY	MAINLINE
3502	CY	DRIVES
7564	CY	SIDELINES
402	CY	CATAMOUNT TRAIL
172	CY	CUT TO FILL TRANSITION
152	CY	CUL-DE-SAC
71	CY	ROUNDING
225450	CY	TOTAL
		SOLID ROCK EXCAVATION
86055	CY	MAINLINE
1681	CY	UNAVOIDABLE OVERBREAKAGE
1377	CY	SIDELINES
37	CY	ROUNDING
89150	CY	TOTAL
		SUBBASE OF CRUSHED GRAVEL (FINE GRADED)
407	CY	DRIVES
227	CY	BRIDGE 24
86	CY	CATAMOUNT TRAIL
135	CY	TURNOUTS
5	CY	ROUNDING
860	CY	TOTAL
		SUBBASE OF DENSE GRADED CRUSHED STONE
70745	CY	MAINLINE
1428	CY	SIDELINES
209	CY	CUL-DE-SAC
1606	CY	DRIVES
300	CY	CATAMOUNT TRAIL
72	CY	ROUNDING
74360	CY	TOTAL
		SUPERPAVE BITUMINOUS CONCRETE PAVEMENT
16301	TON	TYPE IIIS MAINLINE (EXCLUDING BRIDGES)
12779	TON	TYPE IIS MAINLINE (EXCLUDING BRIDGES)
10552	TON	TYPE IS MAINLINE (EXCLUDING BRIDGES)
164	TON	BRIDGE 25
199	TON	BRIDGE 25A
170	TON	BRIDGE 25B
266	TON	SIDELINES, TYPE IIIS
456	TON	SIDELINES, TYPE IS
649	TON	SIDELINES OVERLAY, TYPE IIIS
210	TON	DRIVES, TYPE IIIS
74	TON	CUL-DE-SAC, TYPE IIIS
189	TON	BR. 24 DETOUR, TYPE IIIS
247	TON	GABION WALLS DETOUR, TYPE IIIS
24	TON	ROUNDING
42280	TON	TOTAL
		EMULSIFIED ASPHALT
307.5	CWT	ROADWAY
9.2	CWT	SIDELINES (INCLUDES OVERLAY PORTION)
2.5	CWT	BRIDGE 25
3.0	CWT	BRIDGE 25A
3.0	CWT	BRIDGE 25B
0.8	CWT	ROUNDING
326.0	CWT	TOTAL

DESIGN FILE NO. /78D096/DESIGN/DD096.DGN
IPARM FILE DD096Q1
DRAWN BY SQDB
SQUAD LEADER DELLA SANTA
DATE PLOTTED 15-APR-2002
PROJ. NAME SEARSBURG-WILMINGTON
PROJ. NO. NHF 010-1(18)

QUANTITY SHEET

STATE OF VERMONT
AGENCY OF TRANSPORTATION

APPROXIMATE SUMMARY OF QUANTITIES

DEERFIELD CHANNEL	NON-FED. PART.	GABION WALL STA.145+68 TO 147+28 RT	GABION WALL STA.148+75 TO 152+25 RT	BR 500 SERIES WALL NO.1	BR 600 SERIES WALL NO. 2	EROSION CONTROL	TRAINING	LAND-SCAPING	WETLAND MITIGAT.	BR 100 SERIES BR 24	BR 200 SERIES BR 25	BR 300 SERIES BR 25A	BR 400 SERIES BR 25B	BRIDGE NO. 26	BRIDGE NO. 27	ROADWAY	QUANTITIES GRAND TOTAL	UNIT	ITEMS	ITEM NO.	ROUNDING
				75200	51530					102105	181210	157790	215505	215	180	10350	794085	LB	REINFORCING STEEL	507.15	51
											127045	134480	111130				372655	LB	EPOXY COATED REINFORCING STEEL	507.17	
											1						1	LS	SHEAR CONNECTORS (2502-7/8''X 7'')	508.15	
												1					1	LS	SHEAR CONNECTORS (2946-7/8''X 7'')	508.15	
													1				1	LS	SHEAR CONNECTORS (3564-7/8''X 7'')	508.15	
														1			1	EA	CORRUGATED ALUM. ALLOY PLATE PIPE ARCH ARCH (11'1''X 7'0" X102')@ STA. 207+14	511.30	
															1		1	EA	CORRUGATED ALUMINUM ALLOY PLATE PIPE ARCH (9'11''X6'8"X156')@ STA. 262+13	511.30	
											1						1	LS	STRUCTURAL PAINTING, SHOP APPLIED (17 TONS)	513.25	
												1					1	LS	STRUCTURAL PAINTING, SHOP APPLIED (16 TONS)	513.25	
													1				1	LS	STRUCTURAL PAINTING, SHOP APPLIED (11.36+-TONS)	513.25	
											1						1	LS	SURFACE PREPARATION, SHOP (BR 25)	513.40	
												1					1	LS	SURFACE PREPARATION, SHOP (BR 25A)	513.40	
													1				1	LS	SURFACE PREPARATION, SHOP (BR 25B)	513.40	
										29	185	68	80				362	GAL	WATER REPELLANT	514.10	
											67	103	48				218	LF	BR. EXPANSION JOINT(VT.JOINT)	516.10	
											56		65				121	LF	BR. EXPANSION JOINT(PLUG JOINT)	516.10	
										287							287	SY	SHEET MEMBRANE WATERPROOFING	519.20	
											1500	1665	1180				4345	SY	SHEET MEMBRANE WATER PROOFING (MOD. - TORCH APPLIED)	519.20	
											593	617	674				1884	LF	BRIDGE RAILING-NETC 2 RAIL	525.33	
		1510	3740														5250	SF	MECHANICALLY STABILIZED EARTH (MSE) WALL (MOD. - GABION WALL)	526.30	6
												1					1	EA	ONE-WAY TEMPORARY BRIDGE (MODIFIED)	528.10	
										1							1	EA	REMOVAL OF STRUCTURE @ STA. 116+00 LT	529.15	
											1						1	EA	REMOVAL OF STRUCTURE @STA.119+00 LT	529.15	
									1								1	EA	REMOVAL OF STRUCTURE (MOD) (WETLAND MITIGATION AREA)	529.15	
														1			1	EA	PARTIAL REMOVAL OF STRUCTURE	529.20	
											10	10	12				32	EA	BEARING DEVICE ASSEMBLY (EXPANSION @ ABUTMENT)	531.10	
											5	5	6				16	EA	BEARING DEVICE ASSEMBLY (FIXED @ PIER)	531.10	
											5		6				11	EA	BEARING DEVICE ASSEMBLY (EXPANSION @ PIER)	531.10	
										1							1	LS	PRECAST CONCRETE BOX (MOD.)	540.10	
																259	259	LF	12'' CSP .064 (2-2/3 X 1/2)	601.0005	
																150	150	LF	15'' CSP .064	601.0010	
																10	10	LF	18'' CSP .064 (2-2/3 X 1/2)	601.0015	
																4	4	LF	24'' CSP .064 (2-2/3 X 1/2)	601.0025	
																164	164	LF	60'' CAAP .135 W/ 9' VERT RISER	601.0268	
																4	4	EA	12'' CSP ELBOW .064 (2-2/3 X 1/2)	601.5005	
																2	2	EA	12'' CSPES .064	601.6005	
																2	2	EA	15'' CSPES .064	601.6010	
																1	1	EA	42'' CAAPES .105	601.6252	
																1	1	EA	48'' CAAPES .105	601.6257	
																			** BEGIN OPTION BID ITEMS **		
																208	208	LF	12'' CSP .064 (2-2/3 X 1/2)	601.0005	
																208	208	LF	12'' RCP CL III	601.0805	
																208	208	LF	12'' CPEP (SL)	601.2605	
																220	220	LF	15'' CSP .064 (2-2/3 X 1/2)	601.0010	
																220	220	LF	15'' RCP CL III	601.0810	
																220	220	LF	15'' CPEP (SL)	601.2610	

DETAILED SUMMARY OF QUANTITIES

QUANTITIES	UNIT	ITEMS
		TRENCH EXCAVATION OF EARTH
4805	CY	DESIGNED DRAINAGE
5485	CY	DESIGNED UNDERDRAIN
180	CY	ESTIMATED UNDERDRAIN
30	CY	ROUNDING
10500	CY	TOTAL
		SAND BORROW
74603	CY	DESIGNED 24'' (LAYER OF SAND BORROW)
780	CY	3'' IN LEDGE CUTS
117	CY	ROUNDING
75500	CY	TOTAL
		FINE GRADING-SUBGRADE
126380	SY	MAINLINE
976	SY	EAST CONNECTOR
524	SY	DRIVE, EAST CONNECTOR
1533	SY	WEST CONNECTOR
6077	SY	DRIVES
662	SY	CUL-DE-SAC
1500	SY	CATAMOUNT TRAIL
1572	SY	TURNOUTS
176	SY	ROUNDING
139400	SY	TOTAL
		TRENCH EXCAVATION OF ROCK
602	CY	DESIGNED DRAINAGE
1993	CY	DESIGNED UNDERDRAIN
100	CY	TEST TRENCHES FOR DRILLING & BLASTING
25	CY	ROUNDING
2720	CY	TOTAL
		STRUCTURE EXCAVATION
377	CY	ROADWAY
962	CY	GABION WALL
11	CY	ROUNDING
1350	CY	TOTAL
		STONE FILL, TYPE II
2566	CY	FOR SLOPE PROTECTION
221	CY	FROM DRAINAGE SUMMARY
13	CY	ROUNDING
2800	CY	TOTAL
		GRANULAR BORROW
900	CY	BRIDGE 24
2350	CY	BRIDGE 25
2970	CY	BRIDGE 25A
4863	CY	BRIDGE 25B
67	CY	ROUNDING
11,150	CY	TOTAL
2970	CY	BRIDGE 25A

DESIGN FILE NO. /78D096/DESIGN/DD096.DGN
IPARM FILE DD096Q2
DRAWN BY SQDB
SQUAD LEADER DELLA SANTA
DATE PLOTTED 15-APR-2002
PROJ. NAME SEARSBURG-WILMINGTON
PROJ. NO. NHF 010-1(18)

QUANTITY SHEET

STATE OF VERMONT
AGENCY OF TRANSPORTATION

APPROXIMATE SUMMARY OF QUANTITIES

DEERFIELD CHANNEL	NON-FED. PART.	GABION WALL STA.145+68 TO 147+28 RT	GABION WALL STA.148+75 TO 152+25 RT	BR 500 SERIES WALL NO.1	BR 600 SERIES WALL NO. 2	EROSION CONTROL	TRAINING	LAND-SCAPING	WETLAND MITIGAT.	BR 100 SERIES BR 24	BR 200 SERIES BR 25	BR 300 SERIES BR 25A	BR 400 SERIES BR 25B	BRIDGE NO. 26	BRIDGE NO. 27	ROADWAY	QUANTITIES GRAND TOTAL	UNIT	ITEMS	ITEM NO.	ROUNDING
																128	128	LF	15'' CSP .064 (2-2/3 X 1/2)	601.0010	
																128	128	LF	15'' RCP CL III	601.0810	
																128	128	LF	15'' CPEP	601.0910	
																836	836	LF	18'' CAAP .060 (2-2/3 X 1/2)	601.0215	
																836	836	LF	18'' PCCSP .064 (2-2/3 X 1/2)	601.0415	
																836	836	LF	18'' RCP CL III	601.0815	
																836	836	LF	18'' CPEP (SL)	601.2615	
																56	56	LF	18'' CSP .064 (2-2/3 X 1/2)	601.0015	
																56	56	LF	18'' RCP CL III	601.0815	
																56	56	LF	18'' CPEP (SL)	601.2615	
																104	104	LF	18'' CAAP .075 (2-2/3 X 1/2)	601.0216	
																104	104	LF	18'' PCCSP .079 (2-2/3 X 1/2)	601.0416	
																104	104	LF	18'' RCP CL III	601.0815	
																104	104	LF	18'' CPEP (SL)	601.2615	
																1648	1648	LF	18'' CAAP .060 (2-2/3 X 1/2)	601.0215	
																1648	1648	LF	18'' PCCSP .064 (2-2/3 X 1/2)	601.0415	
																1648	1648	LF	18'' RCP CL III	601.0815	
																1648	1648	LF	18'' CPEP	601.0915	
																112	112	LF	18'' CSP .064 (2-2/3 X 1/2)	601.0015	
																112	112	LF	18'' RCP CL III	601.0815	
																112	112	LF	18'' CPEP	601.0915	
																496	496	LF	18'' CAAP .060 (2-2/3 X 1/2)	601.0215	
																496	496	LF	18'' PCCSP .064 (2-2/3 X 1/2)	601.0415	
																496	496	LF	18'' CPEP (SL)	601.2615	
																64	64	LF	18'' CAAP .060 (2-2/3 X 1/2)	601.0215	
																64	64	LF	18'' PCCSP .064 (2-2/3 X 1/2)	601.0415	
																64	64	LF	18'' CPEP	601.0915	
																88	88	LF	24'' CAAP .060 (2-2/3 X 1/2)	601.0225	
																88	88	LF	24'' PCCSP .064 (2-2/3 X 1/2)	601.0425	
																88	88	LF	24'' RCP CL III	601.0825	
																88	88	LF	24'' CPEP (SL)	601.2620	
																68	68	LF	24'' CSP .064 (2-2/3 X 1/2)	601.0025	
																68	68	LF	24'' RCP CL III	601.0825	
																68	68	LF	24'' CPEP (SL)	601.2620	
																68	68	LF	24'' CAAP .060 (2-2/3 X 1/2)	601.0225	
																68	68	LF	24'' PCCSP .064 (2-2/3 X 1/2)	601.0425	
																68	68	LF	24'' CPEP	601.0920	
																380	380	LF	30'' CAAP .075 (2-2/3 X 1/2)	601.0236	
																380	380	LF	30'' PCCSP .079 (2-2/3 X 1/2)	601.0436	
																380	380	LF	30'' RCP CL III	601.0835	
																380	380	LF	30'' CPEP (SL)	601.2625	
																216	216	LF	30'' CAAP .075 (2-2/3 X 1/2)	601.0236	
																216	216	LF	30'' PCCSP .079 (2-2/3 X 1/2)	601.0436	
																216	216	LF	30'' RCP CL III	601.0835	
																216	216	LF	30'' CPEP	601.0925	
																104	104	LF	30'' CAAP .075 (2-2/3 X 1/2)	601.0236	
																104	104	LF	30'' PCCSP .079 (2-2/3 X 1/2)	601.0436	
																104	104	LF	30'' CPEP	601.0925	
																80	80	LF	30'' CAAP .075 (2-2/3 X 1/2)	601.0236	
																80	80	LF	30'' PCCSP .079 (2-2/3 X 1/2)	601.0436	
																80	80	LF	30'' CPEP (SL)	601.2625	
																64	64	LF	36'' CSP .079 (2-2/3 X 1/2)	601.0046	
																64	64	LF	36'' RCP CL III	601.0845	
																64	64	LF	36'' CPEP (SL)	601.2630	
																180	180	LF	36'' CAAP .075 (2-2/3 X 1/2)	601.0246	
																180	180	LF	36'' PCCSP .079 (2-2/3 X 1/2)	601.0446	
																180	180	LF	36'' RCP CL III	601.0845	
																180	180	LF	36'' CPEP	601.0930	

DETAILED SUMMARY OF QUANTITIES

QUANTITIES	UNIT	ITEMS
		TEMPORARY EROSION CONTROL
400	CY	TRENCH EARTH
200	CY	STONE FILL, TYPE I
75	LB	SEED-WINTER RYE
15	TON	HAY MULCH
750	SY	EROSION MATTING
400	EA	HAY BALES FOR EROSION CONTROL
1650	SY	GEOTEXTILE FOR SILT FENCE

DESIGN FILE NO. /78D096/DESIGN/DD096.DGN
IPARM FILE DD096Q3
PROJ. NAME SEARSBURG-WILMINGTON
PROJ. NO. NHF 010-1(18)

DRAWN BY SQDB
SQUAD LEADER DELLA SANTA
DATE PLOTTED 21-FEB-2002

QUANTITY SHEET

STATE OF VERMONT
AGENCY OF TRANSPORTATION

APPROXIMATE SUMMARY OF QUANTITIES

DEERFIELD CHANNEL	NON-FED. PART.	GABION WALL STA.145+68 TO 147+28 RT	GABION WALL STA.148+75 TO 152+25 RT	BR 500 SERIES WALL NO.1	BR 600 SERIES WALL NO. 2	EROSION CONTROL	TRAINING	LAND-SCAPING	WETLAND MITIGAT.	BR 100 SERIES BR 24	BR 200 SERIES BR 25	BR 300 SERIES BR 25A	BR 400 SERIES BR 25B	BRIDGE NO. 26	BRIDGE NO. 27	ROADWAY	QUANTITIES GRAND TOTAL	UNIT	ITEMS	ITEM NO.	ROUNDING
																116	116	LF	42'' CAAP .105 W/6'-6'' RISER	601.0252	
																116	116	LF	42'' PCCSP .109 W/6'-6'' RISER	601.0452	
																112	112	LF	48'' CAAP .105 (2-2/3 X 1/2)	601.0257	
																112	112	LF	48'' PCCSP .109 (2-2/3 X 1/2)	601.0457	
																84	84	LF	54'' CAAP .105 (2-2/3 X 1/2)	601.0262	
																84	84	LF	54'' PCCSP .109 (3 X 1)	601.0527	
																8	8	EA	15'' CSPES .064 (2-2/3 X 1/2)	601.6010	
																8	8	EA	15'' RCPES CL III	601.6810	
																4	4	EA	18'' CAAPES .060 (2-2/3 X 1/2)	601.6215	
																4	4	EA	18'' RCPES CL III	601.6815	
																4	4	EA	18'' CSPES .064 (2-2/3 X 1/2)	601.6015	
																4	4	EA	18'' RCPES CL III	601.6815	
																1	1	EA	24'' CSPES .064	601.6025	
																1	1	EA	24'' RCPES CL III	601.6825	
																1	1	EA	30'' PCCSPES .079	601.6036	
																1	1	EA	30'' CAAPES .075	601.6236	
																3	3	EA	30'' CAAPES .075	601.6236	
																3	3	EA	30'' RCPES CL III	601.6835	
																			** END OPTION BID ITEMS **		
																2	2	EA	CONCENTRIC REDUCER SECTION	601.98	
																500	500	LF	RELAYING PIPE CULVERTS	601.99	EST.
																28	28	CY	CEMENT RUBBLE MASONRY	602.15	1.1
				416	405												821	SY	STONE MASONRY FACING (MOD.)	602.25	
																13	13	EA	PRC CURB DROP INLET W/CAST IRON GR.	604.30	
																39	39	EA	CAST IRON GRATE WITH FRAME, TYPE B	604.46	
																2	2	EA	CAST IRON GRATE, TYPE C	604.47	
																12	12	EA	CAST IRON GRATE, TYPE D	604.51	
																14800	14800	LF	6'' UNDERDRAIN	605.10	67
																1650	1650	LF	8'' UNDERDRAIN	605.11	15
																1660	1660	LF	6'' UNDERDRAIN CARRIER PIPE	605.20	22
																75	75	LF	8'' UNDERDRAIN CARRIER PIPE	605.21	4
																109	109	EA	UNDERDRAIN FLUSHING BASINS	605.95	
																8	8	EA	UNDERDRAIN FLUSHING BASINS (MOD.)	605.95	
																650	650	HR	ROADWAY PATROL MAINTENANCE	607.10	EST.
																100	100	HR	BULLDOZER RENTAL, TYPE I	608.10	EST.
																100	100	HR	BULLDOZER RENTAL, TYPE II	608.11	EST.
																100	100	HR	POWER GRADER RENTAL	608.15	EST.
																100	100	HR	ALL PURP. EXCAVATOR RENTAL, TYPE I	608.25	EST.
																100	100	HR	ALL PURP. EXCAVATOR RENTAL, TYPE II	608.26	EST.
																100	100	HR	POWER BROOM RENTAL	608.30	EST.
																100	100	HR	TRUCK RENTAL	608.37	EST.
																100	100	HR	LOADER RENTAL, TYPE I	608.40	EST.
																100	100	HR	LOADER RENTAL, TYPE II	608.41	EST.
									10							5200	5210	MGAL	DUST CONTROL WITH WATER	609.10	EST.
																20	20	TON	DUST AND ICE CONTROL W/ CALC. CHLORIDE	609.15	EST.

DETAILED SUMMARY OF QUANTITIES

QUANTITIES	UNIT	ITEMS

DESIGN FILE NO. /78D096/DESIGN/DD096.DGN
IPARM FILE DD096Q4
PROJ. NAME SEARSBURG-WILMINGTON
PROJ. NO. NHF 010-1(18)

DRAWN BY SQDB
SQUAD LEADER DELLA SANTA
DATE PLOTTED 27-FEB-2002

QUANTITY SHEET

STATE OF VERMONT
AGENCY OF TRANSPORTATION

APPROXIMATE SUMMARY OF QUANTITIES

DEERFIELD CHANNEL	NON-FED. PART.	GABION WALL STA.145+68 TO 147+28 RT	GABION WALL STA.148+75 TO 152+25 RT	BR 500 SERIES WALL NO.1	BR 600 SERIES WALL NO. 2	EROSION CONTROL	TRAINING	LAND-SCAPING	WETLAND MITIGAT.	BR 100 SERIES BR 24	BR 200 SERIES BR 25	BR 300 SERIES BR 25A	BR 400 SERIES BR 25B	BRIDGE NO. 26	BRIDGE NO. 27	ROADWAY	QUANTITIES GRAND TOTAL	UNIT	ITEMS	ITEM NO.	ROUNDING
																1200	1200	SY	REINFORCED SOILSLOPE	612.20	
						200					7	13	390			390	1000	CY	STONE FILL, TYPE I	613.10	9
														180	305	2800	3285	CY	STONE FILL, TYPE II	613.11	6
			1500							744	3410	1415	2466			50	9585	CY	STONE FILL, TYPE IV	613.13	34
											160	160	160				480	LF	CAST-IN-PLACE CONCRETE CURB TYPE B	616.28	
																37600	37600	CY	STONE FILL TYPEIV (MOD) (SELECTED BLASTED LEDGE)	613.13	67
																5475	5475	LF	TREATED TIMBER CURB	616.35	21
																8	8	EA	RELOCATE MAILBOX, SINGLE SUPPORT	617.10	
																230	230	EA	YIELDING MARKER POSTS	619.17	5
																20	20	EA	REMOVING AND RESETTING PROP. MARKER	619.20	3
																1	1	EA	REMOVING AND RESETTING PROP. MARKER(MOD.)	619.20	
																420	420	LF	CHAIN-LINK FENCE, 4 FEET (BLACK VINYL COATED)	620.11	
																16	16	LF	GATE FOR CHAIN-LINK FENCE, 6 FEET	620.16	
																3	3	EA	BRACING ASSEMBLY FOR CHAIN-LINK, 4 FEET	620.20	
																1	1	EA	DRIVE GATE FOR WOVEN WIRE FENCE (MOD.)	620.30	
																1600	1600	LF	REMOVING AND RESETTING FENCE	620.50	
																2750	2750	LF	SNOW FENCE (MOD.)	620.70	25
																14	14	LF	CEDAR LOG RAIL	621.16	
																1350	1350	LF	CABLE GUARD RAIL	621.17	
																16362.5	16362.5	LF	STEEL BEAM GUARD RAIL	621.20	
																19	19	EA	MANUFACTURED TERMINAL SECTION	621.505	
																2	2	EA	TERMINAL CONN. FOR STL. BEAM GUARD RAIL	621.53	
																11	11	EA	ENERGY ABSORPTION ATTENUATOR	621.57	EST.
																12	12	EA	ANCHOR FOR STEEL BEAM RAIL	621.60	
																1	1	EA	ANCHOR FOR CABLE RAIL	621.65	
																1	1	EA	ANCHOR FOR CABLE RAIL @ OPENINGS	621.66	
																12	12	EA	GUARD RAIL APPROACH SECT NETC 2 RAIL	621.72	
																2	2	EA	GUARD RAIL APPR. SECT NETC 2 RAIL (MOD.)	621.72	
																9650	9650	LF	REMOVAL AND DISP. OF GUARD RAIL	621.80	48
																15	15	EA	REMOVAL AND DISP. OF GUIDE POSTS	621.81	
									1								1	EA	GUIDE POSTS (MOD.)	621.85	
		720														8280	9000	LF	TEMP. TRAFFIC BARRIER (6280 - EST)	621.90	
		80														920	1000	LF	TEMP. TRAFFIC BARRIER (MOD.),(700 EST.)	621.90	
																50	50	LF	PLASTIC WATER PIPE, RIGID	629.33	
																3600	3600	HR	UNIFORMED TRAFFIC OFFICERS	630.10	EST.
																17750	17750	HR	FLAGGERS	630.15	EST.
																1	1	LS	FIELD OFFICE-ENGINEERS [redacted]	631.10	
																1	1	LS	FIELD OFFICE-SOILS & MATERIALS	631.11	
																1	1	LS	TEST EQUIPMENT-CONCRETE	631.16	
																1	1	LS	TEST EQUIPMENT-BITUMINOUS	631.17	
																1	1	LU	FIELD OFFICE-TELEPHONE	631.25	
							3120										3120	HR	EMPLOYEE TRAINEESHIP	634.10	
																1	1	LS	MOBILIZATION	635.10	
																1	1	LS	TRAFFIC CONTROL	641.10	
																1	1	LS	TRAFFIC CONTROL (MOD.-PUBLIC RELATIONS OFFICER)	641.10	
																4	4	EA	PORTABLE CHANGEABLE MESSAGE SIGN	641.15	
																2	2	EA	PORTABLE ARROW BOARD	641.16	
																40900	40900	LF	4'' WHITE LINE	646.20	43
																36150	36150	LF	4'' YELLOW LINE	646.21	42
																46400	46400	LF	DURABLE 4'' WHITE LINE	646.40	123
																41600	41600	LF	DURABLE 4'' YELLOW LINE	646.41	72
																100	100	LF	DURABLE 24'' STOP BAR	646.46	3
																17	17	EA	DURABLE LETTER OR SYMBOL	646.50	
		470	1030													117500	119000	LF	TEMPORARY 4'' WHITE LINE	646.60	149
		470	1030													104900	106400	LF	TEMPORARY 4'' YELLOW LINE	646.61	106

DETAILED SUMMARY OF QUANTITIES

QUANTITIES	UNIT	ITEMS
		REINFORCED SOILSLOPE
634	SY	STA. 246+75 TO 247+75 RT.
539	SY	STA. 268+00 TO 273+50 RT.
27	SY	ROUNDING
1200	SY	TOTAL

DESIGN FILE NO. /78D096/DESIGN/DD096.DGN
IPARM FILE DD096Q5
DRAWN BY SQDB
SQUAD LEADER DELLA SANTA
DATE PLOTTED 12-APR-2002
PROJ. NAME SEARSBURG-WILMINGTON
PROJ. NO. NHF 010-1(18)

QUANTITY SHEET

STATE OF VERMONT
AGENCY OF TRANSPORTATION

APPROXIMATE SUMMARY OF QUANTITIES

DEERFIELD CHANNEL	NON-FED. PART.	GABION WALL STA.145+68 TO 147+28 RT	GABION WALL STA.148+75 TO 152+25 RT	BR 500 SERIES WALL NO.1	BR 600 SERIES WALL NO. 2	EROSION CONTROL	TRAINING	LAND-SCAPING	WETLAND MITIGAT.	BR 100 SERIES BR 24	BR 200 SERIES BR 25	BR 300 SERIES BR 25A	BR 400 SERIES BR 25B	BRIDGE NO. 26	BRIDGE NO. 27	ROADWAY	QUANTITIES GRAND TOTAL	UNIT	ITEMS	ITEM NO.	ROUNDING
																100	100	LF	TEMPORARY 24'' STOP BAR	646.66	3
																8	8	EA	TEMPORARY LETTER OR SYMBOL	646.70	
																500	500	EA	LINE STRIPING TARGETS	646.73	
										464	2015	865	920	270	455	13100	18089	SY	GEOTEXTILE UNDER STONE FILL	649.31	99
																29500	29500	SY	GEOTEXTILE FOR UNDERDRAIN TRENCH LINING	649.41	
																1503	1503	SY	GEOTEXTILE FOR SILT FENCE (MOD.) (FOR GABION WALL)	649.51	
						7000			661								7661	SY	GEOTEXTILE FOR SILT FENCE	649.51	
						1200											1200	SY	GEOTEXTILE FOR FILTER CURTAIN	649.61	41
						1700											1700	LB	SEED	651.15	
									4								4	LB	SEED (MOD)(NEW ENGLAND RUSH/BULRUSM MIX)	651.15	0.2
						220			38								258	LB	SEED-WINTER RYE	651.17	
						14000											14000	LB	FERTILIZER	651.18	
						56											56	TON	AGRICULTURAL LIMESTONE	651.20	
						71											71	TON	HAY MULCH	651.25	
									10								10	TON	HAY MULCH (MOD)	651.25	0.5
						6500											6500	EA	HAY BALES FOR EROSION CONTROL	651.26	5
																800	800	SY	SODDING	651.30	4
									2585							1975	4560	CY	TOPSOIL	651.35	33
										338	1515	190	560	140	170	14400	17313	SY	GRUBBING MATERIAL	651.40	99
									125								125	SY	GRUBBING MATERIAL (MOD)	651.40	
						2400			400								2800	SY	EROSION MATTING	654.10	42
																14500	14500	SY	EROSION MATTING (JUTE)	654.10	
								100	8								108	EA	EVERGREEN TREES	656.20	
								4									4	EA	EVERGREEN TREES (5-6' PICEA GLAUCA)	656.20	
								~~15~~	21								~~36~~	EA	DECIDUOUS TREES	656.30	
								3									3	EA	DECIDUOUS TREES (1 1/2'' SEMI-DWARF CORTLAND APPLE)	656.30	
								3									3	EA	DECIDUOUS TREES (1 1/2'' SEMI-DWARF MCINTOSH APPLE)	656.30	
								3									3	EA	DECIDUOUS TREES (7 GAL. SEMI-DWARF LIBERTY APPLE)	656.30	
								3									3	EA	DECIDUOUS TREES (7 GAL. SEMI-DWARF RED DELICIOUS APPLE)	656.30	
								4									4	EA	DECIDUOUS TREES (7 GAL. SEMI-DWARF 4 IN 1 APPLE)	656.30	
								10	201								211	EA	DECIDUOUS SHRUBS	656.35	
								16									16	EA	DECIDUOUS SHRUBS(5 GAL. VIBURNUM PLICATUM VAR. TOMENTOSUM ''SHASTA'')	656.35	
									15466								15466	EA	GROUNDCOVER AND VINES	656.40	
																191.59	191.59	SF	TRAFFIC SIGNS, TYPE A	675.20	
																360	360	LF	FLANGED CHANNEL SIGN POST	675.301	9
																89	89	EA	REMOVING SIGNS	675.50	
	2																2	EA	ERECT SALVAGED SIGNS	675.60	

DETAILED SUMMARY OF QUANTITIES

QUANTITIES	UNIT	ITEMS

DESIGN FILE NO. /78D096/DESIGN/DD096.DGN
IPARM FILE DD096Q6
DRAWN BY SQDB
SQUAD LEADER DELLA SANTA
DATE PLOTTED 11-APR-2002
PROJ. NAME SEARSBURG-WILMINGTON
PROJ. NO. NHF 010-1(18)

ITEM DETAIL AND DRAINAGE SHEET

STATE OF VERMONT
AGENCY OF TRANSPORTATION

DRAINAGE STRUCTURES

STA.	STA.	POSITION	ASKEW	TYPE	DITCH		PIPE ARCH			PIPE		ALLOWABLE OPTIONS						PIPE ELBOW	ES	CB	PRFCD	DEPTH DI	CONC CL B	REIN STEEL	DI GRATE	CHAN ELEV	CRM	TR EXCAV		COMM EXC	UNC CHAN EXC	STRUC EXCAV	GRAN BKF STRUC	GRAN BORR	EROS MATT	STONE FILL		MRKR POSTS		EARTH BORR	RIGID PLASTIC PIPE	REMARKS
				IN/OUT	IN	OUT	S	R	L	D	L	PCCSP	CAAP	RCP	CSP	CPEP	CPEP	NO-DEG	EA			DI	CY	LBS	TYPE		CY	EARTH CY	ROCK CY	CY	CY	CY	CY	CY	CY	CY	TYPE	LT	RT	CY	LF	
							IN	IN	FT	IN	FT	TH	TH	CL	TH	SL	TH																									
98+41		CL																										50	5													REMOVE EXISTING 15'' RCP
98+43	98+70	LT/RT		DI						18	84	.064	.060	III			X					4.0	2.1	193	1-B			46								1	I	1	1			STONE FILL TYPE I @ OUTLET
102+50	102+90	RT		HW/DI						30	44	.079	.075	III			X										3.5	45								4	II	1	1			STR. HEADWALL, INLET DITCH W/STONE FILL TYPE II
102+96		CL		DI						30	72	.079	.075	III			X					6.0	4.5	405	1-B			73	3							5	II	1	1	2		DITCH CHECK, OUTLET DITCH, W/STONE FILL TYPE II
105+52		CL		DI						18	92	.064	.060	III			X					5.5	2.8	239	1-B			89								1	I	1	1			OUTLET DITCH W/STONE FILL TYPE I (NEW 4'X 6' DI)
106+00		RT																											17												REMOVE EXISTING CB
107+75		CL		DI						30	84	.079	.075	III		X						5.5	3.6	288	2-B			118	5							4	II	1	1	2		DITCH CHECK, OUTLET DITCH, W/STONE FILL TYPE II
110+20		CL		DI						30	92	.079	.075	III		X						4.0	2.7	228	2-B			95								4	II	1	1			OUTLET DITCH (NEW 4'X 6' DI) W/STONE FILL TYPE II
110+25		LT																										31	5													REMOVE EXISTING 15'' RCP
REV.																																									
112+22		CL																										29	5													REMOVE EXISTING 15'' RCP
115+50		CL		DI						18	60	.064	.060	III			X					6.5	3.2	278	1-D											1	I		1			STONE FILL AT OUTLET
117+90		CL		DI						18	60	.064	.060	III			X					6.5	3.2	278	1-D			5								1	I		1			STONE FILL AT OUTLET
121+24	123+00	LT		DI/DI						18	172	.064	.060	III			X					6.5	4.2	348	2-D																	4' X 6' RCDI AT INLET
123+00		CL		DI						18	56	.064	.060	III			X					6.0	3.0	270	1-D			2											1			
124+81		CL		HW						18	120	.064	.060	III			X										1.8	95								1	I		1			REMOVE EXISTING 18'' RCP. STONE FILL AT INLET & OUTLET.
																																				2	II					
124+81		CL		DI						18	56	.064	.060	III			X					5.5	2.8	239	1-D											1	I		1			STONE FILL AT OUTLET
128+00		RT		DI						12	20				.064					1														1	I		1			STONE FILL AT OUTLET.
128+52	56' LT	120°	12' 06'' LT	DI						18	48	.064	.060	III		X												26										1	1			REMOVE EXISTING 18'' RCP
129+65		RT		DI						18	20	.064	.060	III			X					5.0	3.3	279	2-D											1	I		1			4' X 6' RCDI. STONE FILL AT OUTLET
133+28		RT		DI						12	20				.064	.				1														1	I		1			STONE FILL AT OUTLET.
SURV.																																									
139+50	140+87	LT		DI/DI						18	140	.064	.060	III			X					6.0	3.0	270	1-D																	
140+87		CL		DI						18	60	.064	.060	III			X					6.5	3.2	278	1-D											1	I		1			STONE FILL AT OUTLET
144+65	146+00	LT		DI/DI						18	132	.064	.060	III			X					6.0	3.9	324	2-D																	4' X 6' RCDI AT INLET
145+50	145+72	RT-LT																										41													REMOVE EXISTING 24'' RCP.
145+77		60° 40' 55'' LT		DI						18	100	.064	.060	III			X					3.0	1.7	150	1-B			48								1	I		1			STONE FILL AT OUTLET.
150+00	151+50	LT		ES/ES						15	150				.064				2									73										2				
151+43		CL		DI																								33													REMOVE EXISTING 18'' RCP
154+65		CL		DI						18	64	.064	.060	III			X					5.5	2.8	239	1-B			57	18							2	I	1	1			REMOVE EXIST. 18'' RCP, W/STONE FILL TYPE I @ OUT.
158+70		CL		DI						24	68	.064	.060				X					4.0	2.7	228	2-B			61										1	1	2		DITCH CHECK, REMOVE EXISTING 24'' RCP
159+00		RT								12	14				.064					1																					
161+50		CL		DI						18	80	.064	.060	III		X						4.0	2.7	228	2-B			9	31							3	I	1	1			OUTLET DITCH W/STONE FILL TYPE I
162+00		RT								12	28				.064					1								4	6													
163+65		LT		HW/DI						30	12	.079	.075	III			X										3.5		9													SEE WATERFALL STANDARD D-4
163+65		CL		DI						30	88	.079	.075	III			X					5.0	3.3	279	2-B			5	146							8	II	1	1			(4'X 6' DI) STONE FILL TYPE II @ OUTLET
164+25		CL																										37	5													REMOVE EXISTING 24'' RCP
167+41		LT		DI						15	68			III	.064	X						4.0	2.1	193	1-B			19										1				DRIVE PIPE
167+65		CL																										32													REMOVE EXISTING 15'' RCP
168+00		CL		ES						30	80	.079	.075			X			1									91								1	I	1	1			STONE FILL TYPE II @ OUTLET
																																				9	II					
171+70		CL																										54	5													REMOVE EXISTING 18'' RCP
172+12		LT		ES/ES						15	52			III	.064		X		2									1										1				DRIVE PIPE
DRAINAGE SHEET 1 TOTALS										12	82				.064					4		60.8	5234	16-B		8.8	1269	260							17	I	16	22	6		
										15	150				.064				2					12-D											36	II					
										15	68			III	.064	X																									
										15	52			III	.064		X		2																							
										18	216	.064	.060	III			X																									
										18	128	.064	.060	III		X																									
										24	68	.064	.060				X																									
										30	176	.079	.075	III		X																									
										30	216	.079	.075	III			X																									/78D096/DESIGN/DD096.DGN
TOTALS										30	80	.079	.075			X			1																							

GUARD RAIL

STA.	STA.	LT.	RT.	END TREATMENT MTS	END TREATMENT ANCHOR
STEEL BEAM GUARD RAIL					
110+75	117+66.5	700			1
113+50	118+54.5		512.5	1	
121+22	123+24.5	237.5			
122+10	129+43.5		737.5		
127+18.5	130+04	300			
133+31.5	135+25		200	1	
REV	SURV				
133+47	140+60.5	725			
SURV					
138+25	141+35		312.5	1	
144+79	WC 24+00	412.5			
145+75	149+25	350		1	1
145+09.5	170+42.5		2537.5	1	
176+00	187+97.5		1200	2	
206+12.5	208+87.5	275		2	
205+82.5	217+50		1175	1	1
217+74	230+45.5		1275	1	1
235+12.5	252+87.5		1775	2	
258+47.5	EDC20+82.5		350	1	1
EDC 23+60	263+15		450		2
260+03	262+53	275		1	1
261+80	262+55		75	1	1
262+92	276+46.5		1362.5	1	1
282+10	290+37.5		837.5	2	
EAST CONNECTOR					
11+37.5	14+25		287.5		2
TOTALS		3275	13087.5		
		16362.5		19	12

UNDERDRAIN

STA.	STA.	TYPE	POS.	D	L	TRENCH E	TRENCH R	GRAN BKF	FB	MKR PST
97+00	102+90	U	RT	6	590	276			2	2
103+00	105+52	U	RT	6	252	125			1	1
105+54	107+75	U	RT	6	221	85			1	1
107+77	110+20	U	RT	6	243	75			1	1
SURV.	REV.									
110+25	112+50	U	RT	6	224	79			1	1
112+50		C	RT-LT	6	65	16			1	1
122+00	123+25	U	LT	6	125	45			1	1
123+25		C	LT-RT	6	68	2			1	1
135+25	137+00	U	RT	6	175	63			1	1
137+00		C	RT-LT	6	71	5			1	1
SURV.										
146+25	148+50	U	LT	6	225	50	42		1	1
148+50		C	LT-RT	6	69	20	1		1	1
148+55	154+65	U	LT	6	610	278	171		2	2
154+70	157+00	U	LT	6	230		121		1	1
157+00		C	LT-RT	6	57	7	1		1	1
160+50	161+50	U	LT	6	100		49		1	1
161+00	163+50	U	RT	6	250	13	88		1	1
161+55	163+65	U	LT	6	210		121		1	1
163+50		C	RT	6	13		2		1	1
163+70	167+00	U	LT	6	330	93	31		2	2
167+00		C	LT-RT	6	64	14			1	1
167+02	169+50	U	LT	6	248	125			1	1
169+50		C	LT-RT	6	81	34			1	1
169+52	173+50	U	LT	6	398	213			2	2
173+50		C	LT-RT	6	101	69			1	1
DRAINAGE SHEET 1 TOTALS		U			4431	1687	627		29	29
		C			589					

PROJECT NAME SEARSBURG-WILMINGTON
PROJECT NUMBER NHF 010-1(18)

ITEM DETAIL AND DRAINAGE SHEET

STATE OF VERMONT
AGENCY OF TRANSPORTATION

DRAINAGE STRUCTURES

STA.	STA.	POSITION	ASKEW	TYPE IN/OUT	DITCH IN	DITCH OUT	PIPE ARCH S IN	PIPE ARCH R IN	PIPE ARCH L FT	PIPE D IN	PIPE L FT	ALLOWABLE OPTIONS PCCSP TH	CAAP TH	RCP CL	CSP TH	CPEP SL	CPEP	PIPE ELBOW NO-DEG	ES EA	CB	PROJECT	DEPTH DI	CONC CL B CY	REIN STEEL LBS	DI GRATE TYPE	CHAN ELEV	CRM CY	TR EXCAV EARTH CY	TR EXCAV ROCK CY	COMM EXC CY	UNC CHAN EXC CY	STRUC EXCAV CY	GRAN BKF STRUC CY	GRAN BORR CY	EROS MATT SY	STONE FILL CY	STONE FILL TYPE	MRKR POSTS LT	MRKR POSTS RT	EARTH BORR CY	RIGID PLASTIC PIPE LF	REMARKS
173+00		CL		ES						18	116	.064	.060	III		X			1									114								2	I	1	1			STONE FILL TYPE I @ OUTLET
174+00		RT																										38	5													REMOVE EXISTING 15'' RCP
177+40		RT																										20	5													REMOVE EXISTING 15'' RCP
178+35		LT		ES						24	68			III	.064	X			1									4										1				DRIVE CULVERT
178+50		RT								12	22				.064						1							4														TO BE LOCATED AT THE LOW POINT, FIELD VERIFY
178+80		CL		ES						36	80	.079	.075	III			X					5.0	3.2	279	2-B			49								7	II	1	1			4' X6' D. I., STONE FILL TYPE II @ OUTLET
179+20		CL																										37	5													REMOVE EXISTING 24'' RCP
182+00		RT								12	41				.064			1-10			1							18														
183+70		CL																										47	5													REMOVE EXISTING 18'' RCP
186+90		RT																										27	5													REMOVE EXISTING 15'' RCP
189+00	192+00	LT																																		89	I					SPECIAL DITCH WITH STONE FILL, TYPE I (MAINLINE COM. EX.)
190+43		RT																										32	5													REMOVE EXISTING 15'' RCP
192+02		CL		ES						18	100	.064	.060	III		X			1									23								3	I	1	1			OUTLET DITCH W/STONE FILL TYPE I
194+33		RT																										32	5													REMOVE EXISTING 18'' RCP
195+00		CL		ES						18	96	.064	.060	III		X			1									8								2	I	1	1			STONE FILL TYPE I @ OUTLET
198+35		LT		ES/ES						15	36			III	.064	X			2																									DRIVE CULVERT
203+00	204+00	LT																										41															SPECIAL DITCH
203+22		RT																										27	5													REMOVE EXISTING 15'' RCP
209+50		RT								12	22				.064			1-10			1							1															6' SODDED DITCH
210+00		CL	73° RT	CRHWL						54	84	.109	.105														4	46				84	285			32	II	1	1			C. R. M. CRADLES, INLET AND OUTLET DITCHES (W/STONE FILL TYPE II)
210+30		CL																										38	5													REMOVE EXISTING 30'' C.M.P.
212+50		RT								12	16				.064						1							1	1													
212+62		CL		DI						18	64	.064	.060				X					4.0	2.1	193	1-B			28	25									1	1			REMOVE EXISTING 18'' C.M.P.
215+00		CL		DI						18	88	.064	.060	III		X						4.5	2.3	200	1-B			2	60							2	I	1				STONE FILL TYPE I @ OUTLET
217+00	218+50	LT																																								SPECIAL DITCH INCLUDED IN COMMON EXCAVATION
218+49		CL																										32	5													REMOVE EXISTING 18'' R.C.P.
218+50		CL		ES						30	88	.079	.075	III		X			1									81								10	II	1	1			OUTLET DITCH,, STONE FILL, TYPE II, @ IN & OUT
218+50	219+25	LT																																		45	II					SPECIAL DITCH W/STONE FILL TYPE II, COMMON EXC.
219+60		CL																										48	10													REMOVE EXISTING 15'' R.C.P. AND 18'' C.M.P.
221+15		CL																										24	5													REMOVE EXISTING 15'' R.C.P.
221+75		LT																										30													30	ADJUST CELLAR DRAIN TO CONNECT TO NEW D. I.
																																										AS NEEDED, REPLACE WITH NEW RIGID PLASTIC PIPE.
222+00	223+94	LT		DI						12	208			III	.064	X						3.5	1.9	158	1-B			138										1				DRIVE CULVERT OUTLET INTO SPECIAL DITCH.
222+95		LT																										47										1			20	CONNECT EXIST. 4'' CELLAR DRAIN TO NEW 12'' PIPE.
																																										AS NEEDED, REPLACE WITH NEW RIGID PLASTIC PIPE.
223+46		CL		DI						18	56	.064	.060	III		X						8.0	3.9	347	1-B			46	5							3	I	1	1			REMOVE EXIST. 15" RCPW/STONE FILLTYPE I @ IN & OUT
223+55	224+95	LT																										28								41	I					CONSTRUCT SPECIAL DITCH W/STONE FILL TYPE I
224+00		RT								12	13				.064			1-10			1																					
224+50		RT								12	11				.064			1-10			1																					
225+00		CL		ES						42	116	.109	.105						1									119								8	I	1	1			W/6'-6" VERTICAL RISER
225+00		LT								24	2				.064										1-C																	FOR VERTICAL RISER FOR PIPE @ 225+00 CL
225+00		LT								18	4				.064																											W/CONCENTRIC REDUCER SECT. FOR VERTAL RISER
225+25		LT																										22	5													REMOVE EXISTING 18'' R.C.P.
226+50		RT								12	17				.064						1																					
226+75		LT								15	32			III	.064	X																											CONSTRUCT FIELD DRIVE 15" X 32' OPTION PIPE
227+00	228+50	LT																										18															SPECIAL DITCH (4' WIDE X 166' LONG)
228+00		CL		DI						18	68	.064	.060			X						4.0	2.1	193	1-B			14										1	1			
232+88		RT																										34	5													REMOVE EXISTING 24'' C.M.P.
DRAINAGE SHEET 2 TOTALS										12	208			III	.064	X							15.5																			
										12	142				.064			4-10			7			1370	7-B																		
										15	68			III	.064	X			2								4	131	816			84	285			150	I	1	4	10	50	
										18	456	.064	.060	III		X			3						1-C											94	II					
										18	64	.064	.060				X																										
										18	68	.064	.060			X																										
										18	4				.064																											
										24	2				.064																											
										24	68			III	.064	X			1																								
										30	88	.079	.075	III		X			1																								
TOTALS										36	80	.079	.075	III			X																										
										42	116	.109	.105	W/ 6'-6''		RISER																											
										54	84	.109	.105																														

GUARD RAIL

STA.	STA.	LT.	RT.	END TREATMENT 621.65	END TREATMENT 621.66	REMARKS
						CABLE GUARD RAIL
96+50	110+00	1350		1	1	
						GUARD RAIL APPROACH SECTION,
						NETC 2 RAIL
117+66.5	117+96.5	1				
120+92	121+22	1				
118+54.5	118+83		1			
121+81	122+10		1			
130+04	130+32.5	1				
133+18.5	133+47	1				
129+43.5	129+72.5		1			
133+01	133+31.5		1			
140+60.5	140+90.5	1				
144+48.5	144+79	1				
141+35	141+64		1			
144+81	145+09.5		1			
	TOTAL	6	6			
			12			
						GUARD RAIL APPROACH SECTION,
						NETC 2 RAIL (MODIFIED)
123+24.5	123+43	1				
127+00	127+18.5	1				
	TOTAL	2				
						6' SODDED DITCH
150+50	154+50	15				
219+35	224+75	360				
243+00	243+70	47				
244+05	244+66	41				
263+50	268+57	333				
	TOTAL	796				
TOTALS						

UNDERDRAIN

STA.	STA.	TYPE	POS.	D	L	TRENCH E	TRENCH R	GRAN BKF	FB	MKR PST
173+52	177+50	U	LT	6	398	140			2	2
177+50		C	LT-RT	6	73	25			1	1
177+52	178+77	U	RT	6	125	35			1	1
178+77		C	RT	6	12	2			1	1
178+83	181+00	U	RT	6	217	71			1	1
181+00		C	RT	6	28	8			1	1
181+00	184+50	U	RT	6	350	141			2	2
184+52	188+25	U	RT	6	373	130			2	2
185+00	187+00	U	LT	6	200	66			1	1
187+00		C	LT	6	15	3			1	1
188+25		C	RT	6	20	5			1	1
188+75	192+04	U	LT	6	329	102			2	2
192+04		C	LT-RT	6	90	19			1	1
192+06	195+01	U	LT	6	295	94			2	2
195+01		C	LT-RT	6	90	21			1	1
195+03	198+50	U	LT	6	347	120			2	2
198+50		C	LT-RT	6	81	12			1	1
198+52	206+62	U	LT	8	810	268			3	3
198+75	207+00	U	RT	8	825	449			3	3
206+62	206+75	C	LT	8	24	4			1	1
207+00	207+37	C	RT	8	47	13			1	1
207+58	207+65	C	RT	6	15	2			1	1
207+65	208+25	U	RT	6	60	20			1	1
211+75	212+62	U	LT	6	87		49		1	1
212+67	215+00	U	LT	6	233		119		1	1
215+05	218+25	U	LT	6	320	65	43		2	2
DRAINAGE SHEET 2 TOTALS		U		6	3334	1815	211		29	37
		C		6	424					
		U		8	1635				8	(MOD.
		C		8	71					

/78D096/DESIGN/DD096.DGN

PROJECT NAME SEARSBURG-WILMINGTON
PROJECT NUMBER NHF 010-1(18)

26-FEB-2002 DD096DR2
SHEET 14 OF 435 SHEETS

ITEM DETAIL AND DRAINAGE SHEET

STATE OF VERMONT
AGENCY OF TRANSPORTATION

DRAINAGE STRUCTURES

STA.	STA.	POSITION	ASKEW	TYPE IN/OUT	DITCH IN	DITCH OUT	PIPE ARCH S IN	PIPE ARCH R IN	PIPE ARCH L FT	PIPE D IN	PIPE L FT	ALLOWABLE OPTIONS PCCSP TH	CAAP TH	RCP CL	CSP TH	CPEP SL	CPEP	PIPE ELBOW NO-DEG	ES EA	CB	PROJECTED	DEPTH DI	CONC CL B CY	REIN STEEL LBS	DI GRATE TYPE	CHAN ELEV	CRM CY	TR EXCAV EARTH CY	TR EXCAV ROCK CY	COMM EXC CY	UNC CHAN EXC CY	STRUC EXCAV CY	GRAN BKF STRUC CY	GRAN BORR CY	EROS MATT SY	STONE FILL CY	STONE FILL TYPE	MRKR POSTS LT	MRKR POSTS RT	EARTH BORR CY	RIGID PLASTIC PIPE LF	REMARKS
233+50		CL		DI						18	92	.064	.060	III			X					4.0	2.1	193	1-B			34	7							2	I	1	1			OUTLET DITCH W/STONE FILL TYPE I
236+36		CL		DI						18	72	.064	.060			X						6.0	3.0	270	1-B			5										1	1			OUTLET DITCH
236+70		LT																										23														REMOVE EXISTING 15'' C.M.P.
237+45		LT																										30	6													REMOVE EXISTING CONCRETE CULVERT
238+30		LT																										12														REMOVE EXISTING 8'' C.M.P.
238+50		CL		ES						48	112	.109	.105						1									16					546			13	II	1	1			STONE FILL TYPE II @ INLET
238+92	239+56	LT								36	64			III	.079	X																										DRIVE CULVERT
239+25		LT																										15														REMOVE EXISTING 18'' C.M.P.
240+00		LT																										11														REMOVE EXISTING 15'' PIPE
241+10	241+62	LT		ES/ES						18	52			III	.064		X		2									17														DRIVE CULVERT
244+05		CL		DI						18	64	.064	.060			X						8.0	3.9	347	1-B			36										1	1			
244+56		CL																										26	5													REMOVE EXISTING 15'' R.C.P.
245+00	245+50	LT																																								SPECIAL DITCH, COMMON EXCAVATION
245+50		CL		DI						18	84	.064	.060			X						5.0	2.6	231	1-B			116										1	1			
246+00		LT		ES/DI						15	76			III	.064		X		1									17														DRIVE CULVERT
246+10		CL																										28	5													REMOVE EXISTING 15'' R.C.P.
246+88		CL		DI						18	72	.064	.060			X						7.5	3.7	316	1-B			78										1	1			REMOVE EXISTING 15'' R.C.P.
248+49		CL																										25	5													REMOVE EXISTING 15'' R.C.P.
249+70	251+50	LT																																								SPECIAL DITCH, COMMON EXCAVATION
250+80		LT																										17														REMOVE EXISTING 12'' C.M.P.
251+00		CL		DI						18	84	.064	.060	III		X						4.0	2.1	193	1-B			36								1	I	1	1			STONE FILL TYPE I @ OUTLET
252+00		RT																										23	10													REMOVE EXISTING 15'' R.C.P.
253+50		CL		DI						18	104	.079	.075	III		X						4.0	2.1	193	1-B			14	88							2	I	1	1	2		OUTLET DITCH, W/STONE FIIL TYPE I (DITCH CHECK AT INLET)
258+65		LT		ES/ES						15	56			III	.064	X			2																									DRIVE CULVERT
258+94	261+78	LT																										235								85	I					SPECIAL DITCH W/STONE FILL TYPE I
259+50	260+00	RT/LT		DI/HW						18	104	.064	.060	III			X					3.5	1.9	158	1-B			55										1	1	2		DITCH CHECK
260+00	260+90	RT																										47														CUT & DRAIN EXIST. CELLAR DRAIN INTO SPEC. DITCH
260+00	261+20	RT																										56														SPECIAL DITCH
262+25		RT																																								REMOVE EXISTING 5' X 5' CONCRETE CULVERT.
262+80		LT		DI						18	60			III	.064		X					3.5	1.9	158	1-B			31								4	I	2				DRIVE CULVERT W/STONE FILL TYPE I @ OUTLET
263+08		LT																										49														REMOVE EXISTING 15'' C.M.P.
264+36		CL		DI						18	112	.064	.060	III		X						7.0	3.5	308	1-B			79								2	I	1	1			STONE FILL TYPE I @ OUTLET
267+62		CL		DI						18	60	.064	.060			X						8.0	3.9	347	1-B			74	5							1	I	1	1			REMOVE EXISTING 15'' R.C.P. (W/STONE FILL TYPE I @ OUTLET)
DRAINAGE SHEET 3 TOTALS										15	56			III	.064	X			2				30.7	271	411-B			1205	131				546			97	I	13	11	4		
										15	76			III	.064		X		1																							
										18	196	.064	.060	III			X																				13	II				
										18	104	.079	.075	III		X																									
										18	352	.064	.060			X																									
										18	196	.064	.060	III		X																									
										18	112			III	.064		X		2																							
										36	64			III	.079	X																										
										48	112	.109	.105						1																								
TOTALS																																										

GUARD RAIL

STA.	STA.	LT.	RT.	END TREATMENT	
TOTALS					

UNDERDRAIN

STA.	STA.	TYPE	POS.	D	L	TRENCH E	TRENCH R	GRAN BKF	FB	MKR PST
218+25	218+50	C	LT	6	31	4			1	1
218+75	223+46	U	LT	6	471	152			2	2
222+63	223+73	U	LT	6	110	25			1	1
228+50	231+00	U	LT	6	250	12	136		1	1
228+50		C	LT-RT	6	60	14			1	1
229+50	231+00	U	RT	6	150	27	42		1	1
229+50		C	RT	6	22	7			1	1
231+02	233+50	U	LT	6	248		124		1	1
231+02	232+50	U	RT	6	148		72		1	1
232+50		C	RT	6	20	3	1		1	1
233+55	236+36	U	LT	6	281	72	43		2	2
242+00	244+00	U	LT	6	200	70			1	2
242+00		C	LT-RT	6	72	1			1	1
244+05	245+45	U	LT	6	140	61			1	1
245+50	246+83	U	LT	6	133	90			1	1
246+88	250+95	U	LT	6	407	254			2	2
251+00	253+45	U	LT	6	245	30	84		1	1
253+50	255+50	U	LT	6	200		84		1	1
253+50	255+50	U	RT	6	200	8	130		1	1
253+50		C	RT	6	22	4	1		1	1
255+52	259+50	U	LT	6	398	49	209		2	1
255+52	259+50	U	RT	6	398	45	169		2	2
259+50		C	LT	6	19	3			1	1
263+00	264+36	U	LT	6	136	41			1	1
263+25	264+34	U	RT	6	109	37			1	1
264+34		C	RT	6	70	31			1	1
DRAINAGE SHEET 3 TOTALS		U			4224		1095		31	31
		C			316	1040				

/78D096/DESIGN/DD096.DGN

PROJECT NAME SEARSBURG-WILMINGTON
PROJECT NUMBER NHF 010-1(18)

23-JAN-2002 DD096DR3
SHEET 15 OF 435 SHEETS

ITEM DETAIL AND DRAINAGE SHEET

STATE OF VERMONT
AGENCY OF TRANSPORTATION

DRAINAGE STRUCTURES

STA.	STA.	POSITION	ASKEW	TYPE	DITCH		PIPE ARCH			PIPE		ALLOWABLE OPTIONS						PIPE ELBOW	E S	CB	PROJECT	DEPTH DI	CONC CL B	REIN STEEL	DI GRATE	CHAN ELEV	CRM	TR EXCAV		COMM EXC	UNC CHAN EXC	STRUC EXCAV	GRAN BKF STRUC	GRAN BORR	EROS MATT	STONE FILL		MRKR POSTS		EARTH BORR	RIGID PLASTIC PIPE	REMARKS
				IN/OUT	IN	OUT	S IN	R IN	L FT	D IN	L FT	PCCSP TH	CAAP TH	RCP CL	CSP TH	CPEP SL	CPEP	NO-DEG	EA				CY	LBS	TYPE		CY	EARTH CY	ROCK CY	CY	CY	CY	CY	CY	CY	CY	TYPE	LT	RT	CY	LF	
268+50		RT								12	20				.064						1														1	I					STONE FILL PAD AT OUTLET
268+50		LT																									17														REMOVE EXISTING 18'' C.M.P.
268+75		LT		ES/ES						15	28			III	.064	X			2								12											2			DRIVE CULVERT
272+18		CL		HW						60	164		.135													12.3			30	293	660			30	II					INLET & OUTLET DITCH, W/STONE FILL TYPE II 9' VERTICAL RISER
																																		33	IV					FOR ENERGY DISSIPATION
272+18		LT								24	2				.064									1-C																FOR VERTICAL RISER FOR PIPE @ 272+18 CL
272+18		LT								18	6				.064																									W/CONCENTRIC REDUCER SECT. FOR VERTAL RISER
272+25		LT																									136	5													REMOVE EXIST. 48'' C.M.P.
273+50		RT								12	17				.064						1																			
274+00		CL		ES						30	104	.079	.075				X		1								33								5	II	1	1			OUTLET DITCH, W/STONE FILL TYPE II
																																		14	IV					FOR ENERGY DISSIPATION
274+29		CL																									40	5													REMOVE EXISTING 24'' CONC. CULVERT
274+36		CL																									36														REMOVE EXISTING 24'' C.M.P.
276+22		CL		DI						18	76	.064	.060			X						4.5	2.3	200	1-B			60	5							3	I	1	1			OUTLET DITCH, W/STONE FILL TYPE I, REMOVE EXISTING 18'' R.C.P.
278+50		CL		DI						18	92	.064	.060	III			X					4.5	2.3	200	1-B			52								2	I	1	1			OUTLET DITCH, W/STONE FILL TYPE I
280+00	282+50	LT																																	74	I					SPECIAL DITCH, W/STONE FILL TYPE I, COMMON EXCAVATION
280+00	280+50	RT-LT		ES						30	116	.079	.075	III		X			1								43								12	II	1	1			OUTLET DITCH, W/STONE FILL TYPE II
280+55		LT																									45	10													REMOVE EXISTING 36'' C.M.P.
280+75	281+05	RT																																							SPECIAL DITCH, COMMON EXCAVATION
282+50	287+00	LT																																	30	I					SPECIAL DITCH, COMMON EXCAV., STONE FILL TYPE I, 284+50~285+50
283+95		LT																									30	5													REMOVE EXISTING 18'' R.C.P.
285+00		CL		CH						36	100	.079	.075	III			X										2.8	149							27	II	1	1			CRADLE H.W., LT & RT OUTLET DITCH (STONE FILL TYPE II
285+90		LT																									38														REMOVE EXISTING 18'' R.C.P.
288+21		CL																									31	5													REMOVE EXISTING 15'' R.C.P.
289+30		CL	55° LT	DI						24	88	.064	.060	III		X						5.0	2.6	231	1-B			35								4	II	1	1			
290+34		CL																									45	5													REMOVE EXISTING 18'' R.C.P.
290+50		LT																									27														REMOVE EXISTING 18'' C.M.P.
290+54		LT		ES/ES						18	56			III	.064	X			2								35											2			DRIVE CULVERT
	WEST CONNECTOR																																							
23+00		CL								18	52	.064	.060	III			X					3.0	1.7	150	1-B			29								2	I	1	1			
	EAST CONNECTOR																																							
12+00		RT																									30	5													REMOVE EXISTING 15'' C.M.P.
12+40		CL		DI						18	56	.064	.060	III			X					4.5	2.3	200	1-B			54								1	I	1	1			
	EAST DRIVE CONNECTOR																																							
20+60				ES						18	92	.064	.060	III			X		1								36								4	I	1	1			
DRAINAGE SHEET4 TOTALS										12	35				.064						2																			
										15	28			III	.064	X			2			11.2		5-B		15.1		45		30	293	660		117	I	13	9			
										18	56	.064	.060	III		X								981			1013							78	II					
										18	56			III	.064	X			2					1-C									47	IV					
										18	236	.064	.060	III			X		1																					
										18	76	.064	.060			X																									
										18	6				.064																									
										24	2				.064																									
										24	88	.064	.060	III		X			1																					
										30	116	.079	.075	III		X			1																					
										30	104	.079	.075				X																								
										36	100	.079	.075	III			X																								
										60	164		.135					W/9'	RISER																					
TOTALS																																								

GUARD RAIL

STA.	STA.	LT.	RT.	END TREATMENT
REMOV. & DISPOS. OF EXISTING GUARD RAIL				
105+64	107+94	230		
108+90	109+77	87		
110+90	115+85	495		
115+36	115+88		52	
116+13	118+29	216		
116+16	118+44	228	RT-LT	
120+12	124+07	395		
144+85	151+25	640		
151+25	156+50	525	LT-RT	
156+50	160+45		395	
161+10	164+95	385	LT-RT	
186+05	194+00		795	
207+13	207+83		70	
207+18	207+88		70	
211+24	216+87		563	
217+42	219+71		229	
226+60	236+00	940	LT-RT	
240+70	249+70	900	LT-RT	
250+50	254+00		350	
EDC 23+70	263+00		420	
254+00	EC 14+40		320	
261+80	262+60		80	
269+20	275+80	LT-RT	660	
287+90	290+95		305	
WEST CONNECTOR				
21+48	24+00	252		
TOTALS		5293	4309	
			9602	

UNDERDRAIN

STA.	STA.	TYPE	POS.	D	L	TRENCH E	TRENCH R	GRAN BKF	FB	MKR PST
264+36	267+50	U	LT	6	314	94			2	2
264+38	267+25	U	RT	6	287	97			2	2
264+38		C	RT	6	70	31			1	1
267+62	269+00	U	LT	6	138	52			1	1
276+25	278+50	U	LT	6	225	78			1	1
278+55	284+50	U	LT	6	595	313			3	3
284+50		C	LT-RT	6	74	31			1	1
286+00	289+45	U	LT	6	345	148			2	2
286+00		C	LT-RT	6	65	12			1	1
289+50	291+00	U	LT	6	150	60			1	1
ROUTE 9 EAST CONNECTOR										
10+50	12+40	U	LT	6	190	27	60		1	1
TOTALS										
DRAINAGE SHEET 4		U		6	2244	943	60		16	16
		C		6	209					
DRAINAGE SHEET 1		U		6	4431	1687	627		29	29
		C		6	589					
DRAINAGE SHEET 2		U		6	3334	1815	211		29	37
		C		6	424					
		U		8	1635				8	(MOD.)
		C		8	71					
DRAINAGE SHEET 3		U		6	4224		1095		31	31
		C		6	316	1040				
ESTIMATED		U		6	500	150			2	2
		C		6	100	30			2	2
GRAND TOTALS		U		6	14733	5665	1993		109	117
		C		6	1638					
		U		8	1635				8	(MOD.)
		C		8	71					

/78D096/DESIGN/DD096.DGN

PROJECT NAME SEARSBURG-WILMINGTON
PROJECT NUMBER NHF 010-1(18)

21-FEB-2002 DD096DR4
SHEET 16 OF 435 SHEETS

ITEM DETAIL AND DRAINAGE SHEET

STATE OF VERMONT
AGENCY OF TRANSPORTATION

DRAINAGE STRUCTURES

STA.	STA.	POSITION	ASKEW	TYPE IN/OUT	DITCH IN	DITCH OUT	PIPE ARCH S IN	PIPE ARCH R IN	PIPE ARCH L FT	PIPE D IN	PIPE L FT	ALLOWABLE OPTIONS PCCSP TH	CAAP TH	RCP CL	CSP TH	CPEP SL	CPEP	PIPE ELBOW NO-DEG	ES EA	CB	RISER	DEPTH DI	CONC CL B CY	REIN STEEL LBS	DI GRATE TYPE	CHAN ELEV	CRM CY	TR EXCAV EARTH CY	TR EXCAV ROCK CY	COMM EXC CY	UNC CHAN EXC CY	STRUC EXCAV CY	GRAN BKF STRUC CY	GRAN BORR CY	EROS MATT SY	STONE FILL CY	STONE FILL TYPE	MRKR POSTS LT	MRKR POSTS RT	EARTH BORR CY	RIGID PLASTIC PIPE LF	REMARKS
DRAINAGE	SHEET 1 TOTALS									12	82				.064						4		60.8	5234	16-B		8.8	1269	260						17	I	16	22	6		
										15	150				.064				2						12-D										36	II					
										15	68			III	.064	X																									
										15	52			III	.064		X		2																						
										18	1216	.064	.060	III			X																								
										18	128	.064	.060	III		X																								
										24	68	.064	.060				X																								
										30	176	.079	.075	III		X																								
										30	216	.079	.075	III			X																								
										30	80	.079	.075			X			1																						
DRAINAGE	SHEET 2 TOTALS									12	208			III	.064	X							15.5																	
										12	142				.064			4-10			7			1370	7-B																
										15	68			III	.064	X			2								4	1318	166			84	285			150	I	14	10		50	
										18	456	.064	.060	III		X			3						1-C											94	II					
										18	64	.064	.060				X																								
										18	68	.064	.060			X																								
										18	4				.064																									
										24	2				.064																									
										24	68			III	.064	X			1																					
										30	88	.079	.075	III		X			1																					
										36	80	.079	.075	III			X																								
										42	116	.109	.105	W/ 6	-6''	RISER			1																						
										54	84	.109	.105																												
DRAINAGE	SHEET 3 TOTALS									15	56			III	.064	X			2				30.7	2714	11-B			1205	131				546			97	I	13	11	4		
										15	76			III	.064		X																								
										18	196	.064	.060	III			X																					13	II					
										18	104	.079	.075	III		X																										
										18	352	.064	.060			X																										
										18	196	.064	.060	III		X																										
										18	112			III	.064		X		2																						
										36	64			III	.079	X																									
										48	112	.109	.105						1																						
DRAINAGE	SHEET4 TOTALS									12	35				.064						2																			
										15	28			III	.064	X			2				11.2		5-B		15.1		45		30	293	660			117	I	13	9			
										18	56	.064	.060	III		X								981				1013								78	II					
										18	56			III	.064	X			2						I-C											47	IV					
										18	236	.064	.060	III			X		1																						
										18	76	.064	.060			X																									
										18	6				.064																									
										24	2				.064																									
										24	88	.064	.060	III		X																									
										30	116	.079	.075	III		X			1																						
										30	104	.079	.075				X		1																						
										36	100	.079	.075	III			X																								
										60	164		.135					W/9'	RISER																						
PROJECT	TOTALS									12	259				.064			4-10	2		13																			
										12	208			III	.064	X																									
										15	150				.064				2				118.2	10299							30	377	1491			381	I	56	52	10	50	
										15	220			III	.064	X			6																					
										15	128			III	.064		X		2																					
										18	836	.064	.060	III		X			3						39-B		27.9	4805	602							221	II					
										18	56			III	.064	X			2																	47	IV					
										18	104	.079	.075	III		X																										
										18	1648	.064	.060	III			X		1																						
										18	112			III	.064		X		2																						
										18	496	.064	.060			X																										
										18	64	.064	.060				X																									
										18	10				.064																									
										24	4				.064																									
										24	88	.064	.060	III		X										2-C															
										24	68			III	.064	X			1																						
										24	68	.064	.060				X																									
										30	80	.079	.075			X			1																						
										30	380	.079	.075	III		X			2																						
										30	216	.079	.075	III			X		1						12-D																
										30	104	.079	.075				X																									
										36	64			III	.079	X																									
										36	180	.079	.075	III			X																									
										42	116	.109	.105	W/6'	-6''	RISER			1																						
										48	112	.109	.105						1																						
TOTALS										54	84	.109	.105																												
										60	164		.135					W/9'	RISER																						

GUARD RAIL

STA.	STA.	LT.	RT.	END TREATMENT
TOTALS				

UNDERDRAIN

STA.	STA.	TYPE	POS.	D	L	TRENCH E	TRENCH R	GRAN BKF	FB	MKR PST

/78D096/DESIGN/DD096.DGN

PROJECT NAME SEARSBURG-WILMINGTON
PROJECT NUMBER NHF 010-1(18)

21-FEB-2002 DD096DR5
SHEET 17 OF 435 SHEETS

EARTHWORKS

NOTE: EXCAVATION AND EMBANKMENT QUANTITIES DO NOT INCLUDE GABION WALL.

STATE OF VERMONT
AGENCY OF TRANSPORTATION

GRADES V.C.	GRADES % GRADE	STATION	ELEVATION ON TANGENT	ELEVATION ON CURVES	CORR V.C.	DIST	TOTAL EXCAVATION EARTH AND ROCK AREA	TOTAL EXCAVATION EARTH AND ROCK CU. YDS.	ROCK EXCAVATION AREA	ROCK EXCAVATION CU. YDS.	EMBANKMENT AREA	EMBANKMENT CU. YDS.		
		96+50	BEGIN PROJECT F010-1(18)											
							BUTT							
		96+50	1672.57				118				0			
						50		286				0		
		97+00	1671.21				191				0			
						50		348				1		
		+50	1669.85				185				1			
						50		334				6		
		98+00	1668.49				176				5			
						50		357				14	T CUT	2434
		+50	1667.13				210				10		R CUT	0
						50		372				12	FILL	42
		99+00	1665.77				192				3		F. FAC	1.15
						50		366				6	EXC	2386
		+50	1664.42				203				3			
						50		371				3		
		100+00	1663.06	1663.06	0.00		198				0			
						50		376				0		
		+50	1661.70	1661.77	+0.07		208				0			
						50		395						
		101+00	1660.34	1660.62	+0.28		219							
						50		413						
		+50	1658.98	1659.60	+0.62		227							
						50		395						
		102+00	1657.62	1658.73	+1.11		200				0			
						50		390				0		
		+50	1657.37	1657.99	+0.62		221				0			
						50		349				85		
		103+00	1657.12	1657.40	+0.28		156				92		T CUT	4577
						50		371				87	R CUT	0
		+50	1656.87	1656.94	+0.07		245				2		FILL	185
						50		569				4	F. FAC	1.15
		104+00	1656.62	1656.62	0.00		369				2			
						50		682				4		
		+50	1656.37				368				2		EXC	4364
						50		637				5		
		105+00	1656.12				320				3			
						50		569				3		
		+50	1655.87				295				0			
						50		519				2		
		106+00	1655.62				265				2			
						50		529				2		
		+50	1655.37				306				0			
						50		579				0		
		107+00	1655.12				319				0			
						50		631						
		+50	1654.87				363							
						50		706						
		108+00	1654.62				399						T CUT	6655
						50		752					R CUT	0
		+50	1654.37				413						FILL	7
						50		753					F. FAC	1.15
		109+00	1654.12				400							
						50		787						
		+50	1653.87				450						EXC	6647
						50		830						
		110+00	1653.62				446							
						50		917						
		+50	1653.37				544							
		EQ 110+53.95=												
		-0.97 110+54.92	1653.35			49.03		954						
		+75	1653.25	1653.25	0.00									
		111+00	1653.12	1653.11	-0.01		507				0			
						50		871				0		
		+50	1652.87	1652.78	-0.09		434				0			
						50		778				0	T CUT	5559
		112+00	1652.62	1652.38	-0.24		406				0		R CUT	0
						50		687				0	FILL	2460
		+50	1652.37	1651.89	-0.48		336				0		F. FAC	1.15
						50		644				114		
		113+00	1651.57	1651.33	-0.24		359				123		EXC	2730
						50		443				249		
		+50	1650.77	1650.68	-0.09		119				146			
			CARRIED FORWARD					5294				363		
			COLUMN FOOTINGS					18960				597		

GRADES V.C.	GRADES % GRADE	STATION	ELEVATION ON TANGENT	ELEVATION ON CURVES	CORR V.C.	DIST	TOTAL EXCAVATION EARTH AND ROCK AREA	TOTAL EXCAVATION EARTH AND ROCK CU. YDS.	ROCK EXCAVATION AREA	ROCK EXCAVATION CU. YDS.	EMBANKMENT AREA	EMBANKMENT CU. YDS.		
		+50	1650.77	1650.68	-0.09		119				146			
						50		161				420		
		114+00	1649.97	1649.96	-0.01		55				308			
		+25	1649.57	1649.57	0.00	50		69				705		
		+50	1649.17				20				453			
						50		35				972		
		115+00	1648.38				18				597			
						50		34				856		
		+50	1647.58				19				328			
						36.91		26				448		
		+86.91	1646.98	STOP ROADWAY			19				328			
				BEGIN BRIDGE 24			BUTT				BUTT			
		116+00	1646.78											
							BUTT				BUTT			
		+23.79	1646.41	END BRIDGE 24			40				373			
				RESUME ROADWAY										
						26.21		39				362		
		+50	1645.98				40				373			
						50		37				586		
		117+00	1645.18				0				260			
						50		2				573		
		+50	1644.38				2				359			
						50		2				831		
		118+00	1643.58				0				539		T CUT	140
						50		0				981	R CUT	0
		+50	1642.78				0				520		FILL	4966
						11.38		0				329	F. FAC	1.15
		+61.38	1642.60	STOP ROADWAY			0				520			
				BEGIN BRIDGE 25			BUTT				BUTT		EXF	5571
		119+00	1641.98											
		+50	1641.19											
		120+00	1640.39											
		+50	1639.59											
		121+00	1638.79											
							BUTT				BUTT			
		+08.47	1638.65	END BRIDGE 25			0				289			
				RESUME ROADWAY		41.53		0				445		
		+50	1637.99				0				289			
						50		3				919		
		122+00	1637.19				3				703			
						50		8				1276		
		+50	1636.39	1636.39	0.00		6				675			
						50		24				1167		
		123+00	1635.59	1635.63	+0.04		20				585		T CUT	74
						50		28				1005	R CUT	0
		+50	1634.79	1634.94	+0.15		10				500		FILL	6913
						50		10				776	F. FAC	1.15
		124+00	1633.99	1634.34	+0.35		1				338			
						50		1				656	EXF	7876
		+50	1633.20	1633.80	+0.60		0				371			
						50		0				669		
		125+00	1632.40	1633.34	+0.94		0				352			
						50		0				643		
		+50	1631.60	1632.96	+1.36		0				342			
						50		0				637		
		126+00	1630.80	1632.65	+1.85		0				346			
						50		0				672		
		+50	1630.00	1632.42	+2.42		0				380			
						50		0				773		
		127+00	1630.41	1632.27	+1.86		0				455			
						50		3				1064		
		+50	1630.82	1632.19	+1.35		3				694		T CUT	14
						50		4				1450	R CUT	0
		128+00	1631.24	1632.18	+0.94		1				872		FILL	13223
						50		4				1729	F. FAC	1.15
		+50	1631.65	1632.25	+0.60		3				995			
						50		3				1993	EXF	15192
		129+00	1632.06	1642.40	+0.34		0				1157			
						50		0				2261		
		+50	1632.47	1632.62	+0.15		0				1285			
						50		0				2001		
		130+00	1632.88	1632.92	+0.04		0				876			
						17.40		0				565		
		+17.40	1633.04	1633.05	+0.01		0		STOP ROADWAY		876			
									BUTT	BEGIN BRIDGE 25A	BUTT			
			CARRIED FORWARD					0				565		
			COLUMN FOOTINGS					493				27764		

GRADES V.C.	GRADES % GRADE	STATION	ELEVATION ON TANGENT	ELEVATION ON CURVES	CORR V.C.	DIST	TOTAL EXCAVATION EARTH AND ROCK AREA	TOTAL EXCAVATION EARTH AND ROCK CU. YDS.	ROCK EXCAVATION AREA	ROCK EXCAVATION CU. YDS.	EMBANKMENT AREA	EMBANKMENT CU. YDS.		
		+50	1633.30	1633.30	0.00									
		131+00	1633.71											
		+50	1634.12											
		132+00	1634.53										T CUT	0
		+50	1634.94										FILL	11766
													F. FAC	1.15
		133+00	1635.36										R. FAC	0.495
							BUTT				BUTT			
		+10.89	1635.44	END BRIDGE 25A			0				2031		EXF	13531
				RESUME ROADWAY										
						39.11		0				2942		
		+50	1635.77				0				2031			
						50		0				3797		
		134+00	1636.18	1636.18	0.00		0				2070			
						50		0				2825		
		+50	1636.59	1636.49	-0.10		0				981			
						50		0				1637		
		135+00	1637.00	1636.59	-0.41		0				787			
						50		105				959		
		+50	1637.42	1636.48	-0.94		113				249			
						50		127				417		
		136+00	1637.83	1636.17	-1.66		24				201			
						50		23				352		
		+50	1638.24	1635.65	-2.59		1				179			
						50		1				420		
		137+00	1636.58	1634.92	-1.66		0				275			
						50						644		
		+50	1634.92	1633.99	-0.93						421		T CUT	256
						50						1073	R CUT	0
		138+00	1633.26	1632.85	-0.41						738		FILL	15798
													F. FAC	1.15
		138+46.29 =												
		+84.32 137+61.97	1631.72	1631.60	-0.12	84.32						2928	EXF	17912
		138+00	1630.46	1630.45	-0.01						1137			
						50						1648		
		+15.68	1629.94	1629.94	0.00									
		+50	1628.80								643			
						50						1257		
		139+00	1627.14								715			
						50						2406		
		+50	1625.48								1884			
						50						3694		
		140+00	1623.82								2106			
						50						4119		
		+50	1622.16								2343			
						50						3431		
		141+00	1620.50								1362			
						50						2377		
		+50	1618.84								1205			
						22.34						997		
		+72.34	1618.10	STOP ROADWAY							1205			
				BEGIN BRIDGE 25B							BUTT			
		142+00	1617.18											
													T CUT	3
		+50	1615.52										R CUT	0
													FILL	11859
		143+00	1613.86										F. FAC	1.15
		+50	1612.20										EXF	13635
		144+00	1610.54											
		+50	1608.87											
											BUTT			
		+50.34	1608.88	END BRIDGE 25B			0				194			
				RESUME ROADWAY										
						49.66		3				935		
		145+00	1607.22	1607.22	0.00		3				823			
			CARRIED FORWARD					0				0		
			COLUMN FOOTINGS					259				38858		

/DESIGN/78D096/DD096.DGN

PROJECT NAME SEARSBURG-WILMINGTON
PROJECT NUMBER NHF 010-1(18)

26-DEC-2001 DD096EI
SHEET 18 OF 435 SHEETS

EARTHWORKS

NOTE: EXCAVATION AND EMBANKMENT QUANTITIES DO NOT INCLUDE GABION WALL.

STATE OF VERMONT
AGENCY OF TRANSPORTATION

V. C.	% GRADE	STATION	ELEVATION ON TANGENT	ELEVATION ON CURVES	CORR V. C.	DIST	TOTAL EXCAVATION EARTH AND ROCK AREA	TOTAL EXCAVATION EARTH AND ROCK CU. YDS.	ROCK EXCAVATION AREA	ROCK EXCAVATION CU. YDS.	EMBANKMENT AREA	EMBANKMENT CU. YDS.		
		145+00	1607.22	1607.22	0.00		3				823			
						50		7				1333		
		+50	1605.56	1605.63	+0.07		4		0		617			
						50		4		0		696		
		146+00	1603.90	1604.18	+0.28		0		0		135			
						50		0		0		181		
		+50	1602.24	1602.87	+0.63		0		0		61			
						50		14		0		84		
		147+00	1601.41	1601.69	+0.28		12		0		30			
						50		58		0		51		
		+50	1600.59	1600.66	+0.07		51		0		25			
						50		276		116		32		
		148+00	1599.76	1599.76	0.00		247		125		10		T CUT	2364
						50		399		149		114	R CUT	532
		+50	1598.93	1598.86	-0.07		184		36		113		FILL	2674
						50		312		37		105	F. FAC	1.15
		149+00	1598.11	1597.83	-0.28		153		4		0		R. FAC	0.495
						50		521		117		19		
		+50	1597.28	1596.66	-0.62		410		122		19		EXF	448
						50		773		113		59		
		150+00	1595.62	1595.34	-0.28		425		0		45			
						50		543		0		76		
		+50	1593.96	1593.89	-0.07		161		0		37			
						50		325				126		
		151+00	1592.30	1592.30	0.00		190				99			
						50		405				140		
		+50	1590.64	1590.64	0.00		247				52			
						50		502				57		
		152+00	1588.98	1589.05	+0.07		295		0		10			
						50		620		0		137		
		+50	1587.32	1587.61	+0.29		375		0		138			
						50		650		9		193		
		153+00	1585.66	1586.31	+0.65		327		10		70		T CUT	5840
						50		615		18		65	R CUT	193
		+50	1584.00	1585.16	+1.16		337		9		0		FILL	819
						50		571		27		8	F. FAC	1.15
		154+00	1583.50	1584.15	+0.65		280		20		9		R. FAC	0.495
						50		633		19		8		
		+50	1583.00	1583.29	+0.29		404		0		0		EXC	4994
						50		976		120		9		
		155+00	1582.50	1582.57	+0.07		650		130		10			
						50		1169		183		37		
		+50	1582.00	1582.00	0.00		613		68		30			
						50		906		225		65		
		156+00	1581.50				366		175		40			
						50		736		372		76		
		+50	1581.00				429		227		42			
						50		985		411		85		
		157+00	1580.50				635		217		50			
						50		1452		664		74		
		+50	1580.00				933		500		30			
						50		1706		732		83		
		158+00	1579.50				909		291		60		T CUT	11808
						50		1436		420		168	R CUT	3425
		+50	1579.00				642		163		121		FILL	1429
						50		1222		246		222	F. FAC	1.15
		159+00	1578.50				678		103		119		R. FAC	0.495
						50		1135		123		281		
		+50	1578.00				548		30		185		EXC	11860
						50		1061		49		338		
		160+00	1577.50				598		23		180			
						50		1214		193		250		
		+50	1577.00				713		185		90			
						50		1409		472		93		
		161+00	1576.50				809		325		10			

EARTHWORKS

NOTE: EXCAVATION AND EMBANKMENT QUANTITIES DO NOT INCLUDE GABION WALL.

STATE OF VERMONT
AGENCY OF TRANSPORTATION

GRADES V. C.	GRADES % GRADE	GRADES STATION	GRADES ELEVATION ON TANGENT	GRADES ELEVATION ON CURVES	GRADES CORR V. C.	GRADES DIST	TOTAL EXCAVATION EARTH AND ROCK AREA	TOTAL EXCAVATION EARTH AND ROCK CU. YDS.	ROCK EXCAVATION AREA	ROCK EXCAVATION CU. YDS.	EMBANKMENT AREA	EMBANKMENT CU. YDS.		
		194+00	1542.59				2				172		T CUT	723
						50		62				256	R CUT	0
		+50	1541.61				65				104		FILL	3003
						50		60				241	F. FAC	1.15
		195+00	1540.63				0				156		EXF	2730
						50		6				298		
X		+50	1539.65	1539.65	0.00		6				166			
						50		28				315		
		196+00	1538.67	1538.69	+0.02		24				174			
						50		52				333		
		+50	1537.69	1537.78	+0.09		32				186			
						50		75				348		
		197+00	1536.71	1536.91	+0.20		49				190			
						50		85				347		
		+50	1535.73	1536.09	+0.36		43				185			
						50		106				333		
		198+00	1534.75	1535.31	+0.56		71				175		T CUT	1609
						50		186				255	R CUT	0
		+50	1533.77	1534.58	+0.81		130				100		FILL	2330
						50		304				93	F. FAC	1.15
		199+00	1532.79	1533.89	+1.10		198				0			
						50		378				3		
X		+50	1531.81	1533.25	+1.44		210				3		EXF	1071
						50		389				5		
		200+00	1531.55	1532.65	+1.10		210				2			
						50		388				2		
		+50	1531.29	1532.10	+0.81		209				0			
						50		397				0		
		201+00	1531.03	1531.59	+0.56		220				0			
						50		346				2		
		+50	1530.77	1531.13	+0.36		154				2			
						50		247				2		
		202+00	1530.51	1530.71	+0.20		113				0			
						50		174				8		
		+50	1530.25	1530.34	+0.09		75				9			
						50		125				78		
		203+00	1529.99	1530.01	+0.02		60				75		T CUT	2301
						50		181				70	R CUT	0
X		+50	1529.73	1529.73	0.00		135				1		FILL	379
						50		206				29	F. FAC	1.15
		204+00	1529.47				87				30			
						50		133				77		
		+50	1529.21				57				53		EXC	1865
						50		104				111		
		205+00	1528.95				55				67			
						50		149				136		
		+50	1528.69				106				80			
						50		220				146		
		206+00	1528.43				132				78			
						50		237				192		
		+50	1528.17				124				129			
						50		222				344		
		207+00	1527.91				116				242			
						50		107				571		
		+50	1527.65				0				375			
						50		77				503		
		208+00	1527.39				83				168		T CUT	1543
						50		160				315	R CUT	0
		+50	1527.13				90				172		FILL	3016
						50		162				288	F. FAC	1.15
		209+00	1526.87				85				139			
						50		117				267		
		+50	1526.61				41				150		EXF	1925
						50		92				254		
		210+00	1526.35				58				124			
						50		80				162		
		+50	1526.09				28				51			
						50		208				94		
		211+00	1525.83				197				51			
X														
		+25	1525.70	1525.70	0.00	50		698				103		
		+50	1525.57	1525.56	-0.01		557		0		60			
		CARRIED FORWARD						986		0		359		
		COLUMN FOOTINGS						6561		0		6581		

-1.9600 % VC 800'

-0.5200 % VC 400'

GRADES V. C.	GRADES % GRADE	GRADES STATION	GRADES ELEVATION ON TANGENT	GRADES ELEVATION ON CURVES	GRADES CORR V. C.	GRADES DIST	TOTAL EXCAVATION EARTH AND ROCK AREA	TOTAL EXCAVATION EARTH AND ROCK CU. YDS.	ROCK EXCAVATION AREA	ROCK EXCAVATION CU. YDS.	EMBANKMENT AREA	EMBANKMENT CU. YDS.		
		211+50	1525.57	1525.56	-0.01		557		0		60			
						50		1044		205		134		
		212+00	1525.31	1525.25	-0.06		570		221		85			
						50		1065		512		142		
		+50	1525.05	1524.87	-0.18		580		332		68			
						50		1111		615		91		
		213+00	1524.79	1524.45	-0.34		620		332		30			
X		+25	1524.66	1524.21	-0.45	50		1310		794		32	T CUT	10626
													R CUT	5643
		+50	1524.31	1523.97	-0.34		795		526		5		FILL	782
						50		1557		1053		9	F. FAC	1.15
		214+00	1523.60	1523.42	-0.18		887		611		5		R. FAC	0.495
						50		1794		1262		9		
		+50	1522.89	1522.83	-0.06		1050		752		5		EXC	12520
						50		1759		1202		6		
		215+00	1522.18	1522.17	-0.01		850		546		2			
X		+25	1521.82	1521.82	0.00	50		1446		925		7		
		+50	1521.47				712		453		6			
						50		1689		419		71		
		216+00	1520.76				1112		0		71			
						50		1692		0		156		
		+50	1520.05				715		0		98			
						50		1213				91		
		217+00	1519.34				595				0			
						50		917				1		
		+50	1518.63				395				1			
						50		758				81		
		218+00	1517.92				424				86		T CUT	9808
						50		1003				163	R CUT	1344
		+50	1517.21				659				90		FILL	935
						50		678				150	F. FAC	1.15
		219+00	1516.50				73				72		R. FAC	0.495
						50		148				120		
		+50	1515.79				87				58		EXC	9398
						50		264				95		
		220+00	1515.08				198				45			
						50		304				73		
		+50	1514.37				130				34			
						50		176				163		
		221+00	1513.66				60				142			
						50		190				186		
		+50	1512.95				145				59			
						50		361				128		
		222+00	1512.24				245				79			
		+25	1511.88	1511.88	0.00	50		385				143		
		+50	1511.53	1511.55	+0.02		171				75			
						50		288				114		
		223+00	1510.82	1510.99	+0.17		140				48			
						50		211				141		
		+50	1510.11	1510.58	+0.47		88				104		T CUT	2202
						50		147				163	R CUT	0
		224+00	1509.40	1510.33	+0.93		71				72		FILL	1479
													F. FAC	1.15
X		+25	1509.04	1510.25	+1.21	50		86				124		
		+50	1509.29	1510.22	+0.93		22				62		EXC	501
						50		54				244		
		225+00	1509.79	1510.26	+0.47		36				202			
						50		63				494		
		+50	1510.29	1510.46	+0.17		32				332			
						50		59				692		
		226+00	1510.79	1510.81	+0.02		32				415			
X		+25	1511.04	1511.04	0.00	50		63				894		
		+50	1511.29				36				550			
						50		67				1023		
		227+00	1511.79				36				555			
		CARRIED FORWARD						252		0		3103		
		COLUMN FOOTINGS						21902		6987		5940		

-1.4200 % VC 400'

+1.0000 % VC 400'

GRADES V. C.	GRADES % GRADE	GRADES STATION	GRADES ELEVATION ON TANGENT	GRADES ELEVATION ON CURVES	GRADES CORR V. C.	GRADES DIST	TOTAL EXCAVATION EARTH AND ROCK AREA	TOTAL EXCAVATION EARTH AND ROCK CU. YDS.	ROCK EXCAVATION AREA	ROCK EXCAVATION CU. YDS.	EMBANKMENT AREA	EMBANKMENT CU. YDS.		
		227+00	1511.79				36				555			
						50		109				958		
		+50	1512.29				82				480			
						50		195				830		
		228+00	1512.79				129		0		416		T CUT	7213
						50		656		0		706	R CUT	3708
		+50	1513.29				580		0		346		FILL	6362
						50		1285		398		493	F. FAC	1.15
X		229+00	1513.79	1513.79	0.00		808		430		186		R. FAC	0.495
						50		1855		1220		219		
		+50	1514.29	1514.23	-0.06		1195		888		50		EXC	1732
						50		2861		2090		53		
		230+00	1514.79	1514.55	-0.24		1895		1369		7			
						50		3570		2556		14		
		+50	1515.29	1514.75	-0.54		1961		1392		8			
						50		3747		2492		17		
X		231+00	1515.79	1514.83	-0.96		2086		1299		10			
						50		4069		2455		17		
		+50	1515.33	1514.79	-0.54		2309		1352		8			
						50		4386		2118		15		
		232+00	1514.87	1514.63	-0.24		2428		935		8			
						50		3621		1617		15		
		+50	1514.41	1514.35	-0.06		1483		811		8			
						50		2281		1203		117		
X		233+00	1513.95	1513.95	0.00		980		488		118		T CUT	35479
						50		2930		595		206	R CUT	13330
		+50	1513.49				2184		155		105		FILL	848
						50		4021		219		216	F. FAC	1.15
		234+00	1513.03				2159		81		128		R. FAC	0.495
						50		3819		75		151		
		+50	1512.57				1965		0		35		EXC	41102
						50		3035		0		80		
		235+00	1512.11				1313		0		51			
						50		1581				140		
		+50	1511.65				394				100			
						50		502				229		
		236+00	1511.19				148				147			
						50		199				479		
X		+50	1510.73	1510.73	0.00		67				370			
						50		95				1028		
		237+00	1510.27	1510.33	+0.06		36				740			
						50		115				1500		
		+50	1509.81	1510.04	+0.23		88				880			
						50		225				2027		
		238+00	1509.35	1509.88	+0.53		155				1309			
						50		375				2569		
X		+50	1508.89	1509.83	+0.94		250				1466			
													T CUT	3972
EQ		238+76.24											R CUT	0
-7.17		238+83.41	1509.14	1509.85	+0.71	42.83		410				2400	FILL	17061
													F. FAC	1.15
		239+00	1509.30	1509.88	+0.58		167				1560			
						50		249				3297		
		+50	1509.77	1510.04	+0.27		102				2001		EXF	15648
						50		221				3392		
		240+00	1510.25	1510.33	+0.08		137				1662			
						50		252				3176		
		+50	1510.72	1510.72	0.00		135				1768			
X		+57.17	1510.79	1510.79	0.00	50		236				3109		
		241+00	1511.20				120				1590			
						50		144				2980		
		+50	1511.67				36				1628			
						50		155				2820		
		242+00	1512.15				131				1418			
						50		250				2493		
		+50	1512.62				139				1274			
						50		291				2151		
		243+00	1513.10				175				1049			
						50		465				1633		
		+50	1513.57				327				715			
		CARRIED FORWARD						1793		0		18362		
		COLUMN FOOTINGS						48205		17038		39530		

+1.0000 % VC 400'

-0.9200 % VC 400'

+0.9504 % VC 400'

/DESIGN/78D096/DD096.DGN

PROJECT NAME SEARSBURG-WILMINGTON
PROJECT NUMBER NHF 010-1(18)

11-OCT-2001 DD096E3
SHEET 20 OF 435 SHEETS

EARTHWORKS

NOTE: EXCAVATION AND EMBANKMENT QUANTITIES DO NOT INCLUDE GABION WALL.

STATE OF VERMONT
AGENCY OF TRANSPORTATION

V. C.	% GRADE	STATION	ELEVATION ON TANGENT	ELEVATION ON CURVES	CORR V. C.	DIST	TOTAL EXCAVATION EARTH AND ROCK AREA	TOTAL EXCAVATION EARTH AND ROCK CU. YDS.	ROCK EXCAVATION AREA	ROCK EXCAVATION CU. YDS.	EMBANKMENT AREA	EMBANKMENT CU. YDS.		
		243+50	1513.57				327				715		T CUT	3430
						50		541				1116	R CUT	0
		244+00	1514.05				257				490		FILL	20700
						50		451				722	F. FAC	1.15
		+50	1514.52	1514.52	0.00		230				290			
						50		645				500		
	+0.9504 %	245+00	1515.00	1514.99	-0.01		467				250		EXF	20375
						50		901				458		
		+50	1515.47	1515.42	-0.05		506				245			
						50		686				519		
		246+00	1515.95	1515.85	-0.10		235				316			
						50		443				663		
		+50	1516.43	1516.25	-0.18		243				400			
						50		359				958		
500' VC		247+00	1516.90	1516.62	-0.28		145				635			
						50		225				1392		
		+50	1517.15	1516.97	-0.18		98				868			
						50		175				1562		
		248+00	1517.40	1517.30	-0.10		91				819		T CUT	3323
						50		163				1618	R CUT	0
		+50	1517.65	1517.60	-0.05		85				928		FILL	12930
						50		123				1734	F. FAC	1.15
		249+00	1517.90	1517.89	-0.01		48				945			
						50		67				2294		
		+50	1518.15	1518.15	0.00		24				1533		EXF	11547
						50		181				1732		
		250+00	1518.40				171				338			
						50		247				452		
		+50	1518.65				96				150			
						50		180				324		
		251+00	1518.90				98		0		200			
						50		609		0		356		
		+50	1519.15				560		0		185			
						50		1259		31		340		
	+0.5000 %	252+00	1519.40				800		33		182			
						50		1907		163		304		
		+50	1519.65				1260		143		146			
						50		2511		289		244		
		253+00	1519.90				1452		169		118		T CUT	33577
						50		3604		746		111	R CUT	12905
		+50	1520.15				2440		637		2		FILL	2189
						50		5167		1773		4	F. FAC	1.15
		254+00	1520.40				3140		1278		2		R. FAC	0.495
						50		7615		3800		21		
		+50	1520.65	1520.65	0.00		5084		2826		21		EXC	37448
						50		10478		6103		33		
		255+00	1520.90	1520.83	-0.07		6232		3765		15			
						50		12159		7617		30		
		+50	1521.15	1520.85	-0.30		6900		4461		17			
						50		12940		8311		30		
		256+00	1521.40	1520.74	-0.66		7075		4515		15			
						50		12570		7856		30		
		+50	1521.65	1520.47	-1.18		6501		3970		17			
						50		11026		6704		34		
		257+00	1521.90	1520.06	-1.84		5407		3270		20			
						50		8147		5731		39		
		+50	1522.15	1519.50	-2.65		3392		2920		22			
						50		6269		4131		20		
		258+00	1520.63	1518.79	-1.84		3379		1541		0		T CUT	69924
						50		4463		1427		0	R CUT	41777
		+50	1519.11	1517.93	-1.18		1441		0		0		FILL	791
						50		1782		0		0	F. FAC	1.15
		259+00	1517.59	1516.93	-0.66		484		0		0		R. FAC	0.495
						50		508				0		
		+50	1516.07	1515.77	-0.30		65				0		EXC	89694
						50		60				608		
	-3.0390 %	260+00	1514.55	1514.48	-0.07		0				657			
		CARRIED FORWARD						0		0		0		
		COLUMN FOOTINGS						108461		54682		18248		

V. C.	% GRADE	STATION	ELEVATION ON TANGENT	ELEVATION ON CURVES	CORR V. C.	DIST	TOTAL EXCAVATION EARTH AND ROCK AREA	TOTAL EXCAVATION EARTH AND ROCK CU. YDS.	ROCK EXCAVATION AREA	ROCK EXCAVATION CU. YDS.	EMBANKMENT AREA	EMBANKMENT CU. YDS.		
		260+00	1514.55	1514.48	-0.07		0				657			
						50		0				1201		
		+50	1513.03	1513.03	0.00		0				640			
						50		0				1586		
		+90	1511.82	1511.82	0.00	50		0						
		261+00	1511.51	1511.51	0.00		0				1073			
						50		0				1762		
		+50	1509.99	1510.15	+0.16		0				830			
						50		0				1419		
		262+00	1508.47	1509.00	+0.53		0				702			
						50		0				855		
		+50	1506.96	1508.08	+1.12		0				222			
	-3.0390 %					50		122				312		
500' VC		263+00	1505.44	1507.38	+1.94		132				115			
						50		231				144	T CUT	1729
		+40	1504.22	1506.96	+2.74	50							R CUT	0
						50		290				183	F. FAC	1.15
		+50	1504.36	1506.89	+2.53		118				40		FILL	7946
		264+00	1505.03	1506.61	+1.58		195				158			
						50		453				268		
		+50	1505.70	1506.56	+0.86		294				131		EXF	7409
						50		633				216		
		265+00	1506.38	1506.74	+0.36		390				102			
						50		721				196		
		+50	1507.05	1507.12	+0.07		389				110			
						50		731				196		
		+90	1507.59	1507.59	0.00	50								
	+1.3497 %	266+00	1507.73				400				102			
						50		713				150		
		+50	1508.40				370				60			
						50		620				56		
		267+00	1509.08				300				0			
						50		512				39		
		+50	1509.75				253				42			
						50		429				363		
		268+00	1510.43				210				350		T CUT	4512
						50		416				731	R CUT	0
		+50	1511.10				239				440		FILL	2918
						50		370				1187	F. FAC	1.15
		269+00	1511.78				161				842			
		EQ	269+39.89=										EXC	1156
		-145.71	270+85.60	1512.32		54.29		186				2217		
						50		46				2730		
		271+00	1512.51				24				1363			
						50		64				3042		
		+50	1513.19				26				1585			
						50		60				2683		
		272+00	1513.86				43				1700			
						50		44				1656		
		+50	1514.54				22				1198			
						50		48				963	R CUT	0
		273+00	1515.21	1515.21	0.00		26				590		T CUT	758
						50		47				921	F. FAC	1.15
		+50	1515.89	1515.84	-0.05		26				450		FILL	15561
		274+00	1516.56	1516.36	-0.20		25				545			
						50		54				830		
		+50	1517.24	1516.80	-0.44		33				351		EXF	17137
						50		209				519		
		275+00	1517.91	1517.12	-0.79		193				209			
						50		699				279		
		+50	1518.58	1517.35	-1.23		562				92			
						50		1204				169		
	600' VC	276+00	1519.26	1517.49	-1.77		738				90			
						50		1664				83		
		+50	1518.76	1517.53	-1.23		1059				0			
	-1.0100 %					50		2055				0		
		277+00	1518.25	1517.46	-0.79		1160				0			
		CARRIED FORWARD						5622	0			531		
		COLUMN FOOTINGS						12621	0			26956		

V. C.	% GRADE	STATION	ELEVATION ON TANGENT	ELEVATION ON CURVES	CORR V. C.	DIST	TOTAL EXCAVATION EARTH AND ROCK AREA	TOTAL EXCAVATION EARTH AND ROCK CU. YDS.	ROCK EXCAVATION AREA	ROCK EXCAVATION CU. YDS.	EMBANKMENT AREA	EMBANKMENT CU. YDS.		
		277+00	1518.25	1517.46	-0.79		1160					0		FILL 880
						50		2148				0		
		+50	1517.75	1517.31	-0.44		1160					0		
						50		2089				59		
		278+00	1517.24	1517.04	-0.20		1096					64	T CUT	14717
						50		1872				74	R CUT	0
		+50	1516.74	1516.69	-0.05		926					16	FILL	1848
						50		1437				144	F. FAC	1.15
		279+00	1516.23	1516.23	0.00		626					140		
						50		871				465		
		+50	1515.73				315					362	EXC	12592
						50		678				575		
		280+00	1515.22				417					259		
						50		866				343		
		+50	1514.72				518					111		
						50		1197				103		
		281+00	1514.21				775					0		
						50		1606				0		
		+50	1513.71				960					0		
						50		2019				0		
		+87	1513.33											
		282+00	1513.20	1513.20	0.00		1220					0		
						50		2380				0		
		+50	1512.70	1512.75	+0.05		1350					0		
						50		2394				0		
		283+00	1512.19	1512.39	+0.20		1235					0	T CUT	16454
						50		1908				7	R CUT	0
		+50	1511.69	1512.15	+0.46		826					7	FILL	880
						50		1296				46	F. FAC	1.15
		284+00	1511.18	1511.99	+0.81		574					43		
						50		1185				156		
		+50	1511.49	1511.95	+0.46		706					125	EXC	15442
						50		1603				225		
		285+00	1511.79	1511.99	+0.20		1025					118		
						50		1677				465		
		+50	1512.10	1512.15	+0.05		786					384		
						50		1303				652		
		286+00	1512.40	1512.40	0.00		621					320		
						50		1275				299		
		+50	1512.71				756					3		
						50		1482				11		
		287+00	1513.01				845					9		
						50		1510				8		
		+50	1513.32				786					0		
						50		1434				0		
		288+00	1513.62	1513.62	0.00		763					0	T CUT	13882
						50		1411				2	R CUT	0
		+50	1513.93	1513.89	-0.04		761					2	FILL	1485
						50		1595				5	F. FAC	1.15
		289+00	1514.23	1514.05	-0.18		962					3		
						50		1457				6		
		+50	1514.18	1514.14	-0.04		612					4	EXC	12174
						50		738				37		
		290+00	1514.13	1514.13	0.00		185					36		
						50		373				258		
		+50	1514.08	1514.18	+0.10		218					243		
						50		327				360		
		291+00	1514.03	1514.45	+0.42		200					146		
		END PROJECT: F010-1(18) BEGIN APPROACH					234					195	T CUT	1001
						50							R CUT	0
							22						FILL	873
		291+50	1514.82	1514.92	+0.10		53					65	F. FAC	1.15
						50		58				60		
													EXC	3
		292+00	1515.67				10					0		
						50		9				0		
		292+50	1516.39				0					0		
		END APPROACH												
		CARRIED FORWARD					0		0			0		
		COLUMN FOOTINGS					40432		0			4555		

/DESIGN/78D096/DD096.DGN

PROJECT NAME SEARSBURG-WILMINGTON
PROJECT NUMBER NHF 010-1(18)

11-OCT-2001 DD096E4
SHEET 21 OF 435 SHEETS

EARTHWORKS

NOTE: EXCAVATION AND EMBANKMENT QUANTITIES DO NOT INCLUDE GABION WALL.

STATE OF VERMONT
AGENCY OF TRANSPORTATION

V. C.	% GRADE	STATION	ELEVATION ON TANGENT	ELEVATION ON CURVES	CORR V. C.	DIST	TOTAL EXCAVATION EARTH AND ROCK AREA	TOTAL EXCAVATION EARTH AND ROCK CU. YDS.	ROCK EXCAVATION AREA	ROCK EXCAVATION CU. YDS.	EMBANKMENT AREA	EMBANKMENT CU. YDS.		
				ROUTE 9 WEST CONNECTOR LT. OF CL STA. 145+50										
		20+12	1609.72				BUTT				0			
						38						206		
		+50	1608.56				0				293			
						50		53				415		
		21+00	1607.04				57				155			
						50		54				286		
		+50	1605.51				1				154			
						50		1				261		
	-3.0495 %	22+00	1603.99				0				128			
						50		13				178		
		+50	1602.46				14				64			
X		+60	1602.16	1602.16	0.00	50		76				73		
													T CUT	486
		23+00	1600.94	1601.20	+0.26		68				15		R CUT	0
X		+35	1599.87	1600.79	+0.92	50		122				61	FILL	1527
													F. FAC	1.15
150' VC		+50	1600.15	1600.74	+0.59		64				51		R. FAC	0.495
						50		95				47		
	+1.8400 %	24+00	1601.07	1601.09	+0.02		39				0		EXF	1270
						10		72				0		
X		+10	1601.25	1601.25	0.00		39				0			
				CUL DE SAC (TURN AROUND)										
		70+00					22				139			
						25		27				139		
		70+25					37				162		T CUT	152
						25		36				143	FILL	404
		70+50					40				146		F. FAC	1.15
						25		34				94	EXF	313
		70+75					34				57			
						25		29				27		
		71+00					28				1			
						26		26				1		
		71+26					27				0			
		CARRIED FORWARD						0		0		0		
		COLUMN FOOTINGS						638		0		1931		

V. C.	% GRADE	STATION	ELEVATION ON TANGENT	ELEVATION ON CURVES	CORR V. C.	DIST	TOTAL EXCAVATION EARTH AND ROCK AREA	TOTAL EXCAVATION EARTH AND ROCK CU. YDS.	ROCK EXCAVATION AREA	ROCK EXCAVATION CU. YDS.	EMBANKMENT AREA	EMBANKMENT CU. YDS.		
				EAST CONNECTOR RT. OF CL STA. 254+50										
X	-2.9999 %	10+30	1521.28	1521.28	0.00									
		+40	1520.98	1520.93	-0.05		0		0		0			
	40' VC					10		186		154		0		
X		+50	1520.68	1520.47	-0.21		1003		829		0			
X		+70	1519.24	1519.24	0.00	50		2655		975		0		
		11+00	1517.08				1864		224		0			
	-7.1934 %													
X		+25	1515.29	1515.29	0.00	50		2894		223		0		
		+50	1513.49	1513.69	+0.20		1261		22		0		T CUT	8347
	150' VC					50		1644		20		0	R CUT	1377
X		12+00	1509.89	1511.65	+1.76		515		0		0		FILL	0
						50		702		0		0	F. FAC	1.15
		+50	1511.00	1511.20	+0.20		243		0		0		R. FAC	0.495
X		+75	1511.55	1511.55	0.00	50		266		0		0	EXC	9029
		13+00	1512.10				44		0		0			
				EAST DR. CONNECTOR RT. OF CL STA. 261+50										
X	-2.9999 %	20+20	1509.40	1509.40	0.00		0				0			
						20						76		
X		+40	1508.80	1508.51	-0.29			0			206			
	150' VC					10						76		
		+50	1507.91	1507.84	-0.07		0				206			
X	-8.8751 %	+60	1507.03	1507.03	0.00									
X		+70	1506.14	1506.14	0.00	50		13				215	T CUT	108
													R CUT	0
		21+00	1503.48	1503.99	+0.51		14				26		FILL	393
													F. FAC	1.15
X	100' VC	+20	1501.70	1503.13	+1.43	50		60				25		
		+50	1502.47	1502.70	+0.23		51				1		EXF	344
						20		35				1		
X	+2.5601 %	+70	1502.98	1502.98	0.00		44				0			
		CARRIED FORWARD						0		0		0		
		COLUMN FOOTINGS						8455		1377		393		

V. C.	% GRADE	STATION	ELEVATION ON TANGENT	ELEVATION ON CURVES	CORR V. C.	DIST	TOTAL EXCAVATION EARTH AND ROCK AREA	TOTAL EXCAVATION EARTH AND ROCK CU. YDS.	ROCK EXCAVATION AREA	ROCK EXCAVATION CU. YDS.	EMBANKMENT AREA	EMBANKMENT CU. YDS.		

EARTHWORKS

STATE OF VERMONT
AGENCY OF TRANSPORTATION

SUMMARY AND BALANCES

STATION TO STATION		TOTAL EXCAV EARTH & ROCK	ROCK EXCAV CUBIC YARDS	EMBANKMENT CUBIC YARDS	EXCESSES CUT	EXCESSES FILL	ACCUMULATIVE EXCESSES CUT	ACCUMULATIVE EXCESSES FILL
96+50	100+00	2434	0	42	2386		2386	
100+00	105+00	4577	0	185	4364		6750	
105+00	110+00	6655	0	7	6647		13397	
110+00	115+00	5559	0	2460	2730		16127	
115+00	120+00	140	0	4966		5571	10556	
120+00	125+00	74	0	6913		7876	2680	
125+00	130+00	14	0	13223		15192		12512
130+00	135+00	0	0	11766		13531		26043
135+00	140+00	256	0	15798		17912		43955
140+00	145+00	3	0	11859		13635		57590
145+00	150+00	2364	532	2674		448		58038
150+00	155+00	5840	193	819	4994			53044
155+00	160+00	11808	3425	1429	11860			41184
160+00	165+00	9978	3198	728	10724			30460
165+00	170+00	1497	0	2305		1154		31614
170+00	175+00	1098	0	782	199			31415
175+00	180+00	1982	0	249	1696			29719
180+00	185+00	4343	0	47	4289			25430
185+00	190+00	2237	0	1795	173			25257
190+00	195+00	723	0	3003		2730		27987
195+00	200+00	1609	0	2330		1071		29058
200+00	205+00	2301	0	379	1865			27193
205+00	210+00	1543	0	3016		1925		29118
210+00	215+00	10626	5643	782	12520			16598
215+00	220+00	9808	1344	935	9398			7200
220+00	225+00	2202	0	1479	501			6699
225+00	230+00	7213	3708	6362	1732			4967
230+00	235+00	35479	13330	848	41102		36135	
235+00	240+00	3972	0	17061		15648	20487	
240+00	245+00	3430	0	20700		20375	112	
245+00	250+00	3323	0	12930		11547		11435
250+00	255+00	33577	12905	2189	37448		26013	
255+00	260+00	69924	41777	791	89694		115707	
CARRIED FORWARD								
COLUMN FOOTINGS		246589	86055	150852				

SUMMARY AND BALANCES

STATION TO STATION		TOTAL EXCAV EARTH & ROCK	ROCK EXCAV CUBIC YARDS	EMBANKMENT CUBIC YARDS	EXCESSES CUT	EXCESSES FILL	ACCUMULATIVE EXCESSES CUT	ACCUMULATIVE EXCESSES FILL
260+00	265+00	1729	0	7946		7409	108298	
265+00	270+00	4512	0	2918	1156		109454	
270+00	275+00	758	0	15561		17137	92317	
275+00	280+00	14717	0	1848	12592		104909	
280+00	285+00	16454	0	880	15442		120351	
285+00	290+00	13882	0	1485	12174		132525	
290+00	292+50	1001	0	873		3	132522	
END APPROACH								
ML TOTALS		299642	86055	182363				
CUL-DE-SAC		152	0	404		313	132209	
RTE 9 W. CONN LT OF CL STA 145+50		486	0	1527		1270	130939	
E. CONN RT OF CL STA 254+50		8347	1377	0	9029		139968	
E. DR. CONN RT OF CL STA 261+50		108	0	393		344	139624	
DRIVEWAYS		3502	0	5500		2823	136801	
CUT TO FILL TRANSITION		172	0	172		26	136775	
UNAVOIDABLE OVERBREAKAGE		1681	1681	0	2513		139288	
CATAMOUNT TRAIL		402		0	402		139690	
CARRIED FORWARD								
COLUMN FOOTINGS		314492	89113	190359				

SUMMARY BY COLUMNS

SHEET NO.	COL. NO.	EXCAVATION TOTAL CY	EXCAVATION ROCK CY	EMBANKMENT CY
1	1	18960	0	597
	2	493	0	27764
	3	259	0	38858
2	1	22635	4815	5265
	2	11182	2533	3581
	3	7931	0	4488
3	1	6561	0	6581
	2	21902	6987	5940
	3	48205	17038	39530
4	1	108461	54682	18248
	2	12621	0	26956
	3	40432	0	4555
ML TOTALS		299642	86055	182363
SIDELINES				
5	1	638	0	1931
	2	8455	1377	393
SUBTOTALS		308735	87432	184687
DRIVES		3502	0	5500
C-F TRANS		172	0	172
OVERBREAKAGE		1681	1681	0
CAT. TRAIL		402		0
GRAND TOTALS		314492	89113	190359

/78D096/DESIGN/DD096.DGN

REMARKS

EARTH AND ROCK EXCAVATION	314492
SOLID ROCK EXCAVATION	89113
EARTH EXCAVATION	225379
PLANIMETERED FILL	190359
LESS FACTORED SOLID ROCK (1.3 FACTOR)	115847
LESS DISPLACEMENT OF ANY LARGE STRUCTURES	0
LESS DISPLACEMENT BY TYPE II STONE FILL (FOR SLOPE PROTECTION)	2566
NET PLANIMETERED FILL	71946
FACTOR	1.15
PLANIMETERED FILL INCLUDING FACTOR	82738
MATERIALS AVAILABLE FOR FILLS	
EARTH EXCAVATION	225379
CHANNEL EXCAVATION (80% OF 8656)	6925
UNDERDRAIN EXCAVATION (60% OF 5485)	3291
STRUCTURE EXCAVATION (60% OF 8525)	5115
TOTAL MATERIAL AVAILABLE FOR FILL	240710
TOTAL FILL INCLUDING FACTOR	82738
TOTAL MATERIAL FOR FILL	240710
BORROW	
EXCESS EXCAVATION	157972

PROJECT NAME SEARSBURG - WILMINGTON
PROJECT NUMBER F 010-1(18) (LONG VERSION)

30-NOV-2001 DD096ES
SHEET 23 OF SHEETS

EARTHWORKS

*SELECTED BLASTED LEDGE FROM PROJECT

STATE OF VERMONT
AGENCY OF TRANSPORTATION

GRADES V. C.	GRADES % GRADE	STATION	ELEVATION ON TANGENT	ELEVATION ON CURVES	CORR V. C.	DIST	AREA	CU. YDS.	*STONE FILL TYPE IV (MOD.) AREA	CU. YDS.	AREA	CU. YDS.	AREA	CU. YDS.
		112+50							0					
						50				114				
		113+00							123					
						50				248				
		113+50							145					
						50				256				
		114+00							132					
						50				253				
		114+50							141					
						50				284				
		115+00							166					
						86.91				534				
		115+86.91	BEGIN BRIDGE						166					
									BUTT					
									BUTT					
		116+23.79	END BRIDGE						127					
						26.21				123				
		116+50							127					
						50				118				
		117+00							0					
		152+00							0					
						50				103				
		152+50							111					
						50				103				
		153+00							0					
		155+00							0					
						50				24				
		155+50							26					
						50				53				
		156+00							31					
						50				60				
		156+50							34					
						50				69				
		157+00							40					
						50				63				
		157+50							28					
						50				78				
		158+00							56					
						50				143				
		158+50							98					
						50				188				
		159+00							105					
						50				252				
		159+50							167					
						50				316				
		160+00							174					
						50				242				
		160+50							87					
						50				81				
		161+00							0					
		164+00							0					
						50				41				
		164+50							44					
						50				139				
		165+00							106					
						50				213				
		165+50							124					
						50				240				
		166+00							135					
						50				246				
		166+50							131					
						50				254				
		167+00							143					
						50				249				
		167+50							126					
						50				124				
		168+00							8					
						50				7				
		168+50							0					
		CARRIED FORWARD												
		COLUMN FOOTINGS								5218				

GRADES V. C.	GRADES % GRADE	STATION	ELEVATION ON TANGENT	ELEVATION ON CURVES	CORR V. C.	DIST	AREA	CU. YDS.	*STONE FILL TYPE IV (MOD.) AREA	CU. YDS.	AREA	CU. YDS.	AREA	CU. YDS.
		211+50							0					
						50				65				
		212+00							70					
						50				105				
		212+50							43					
						50				60				
		213+00							22					
						50				20				
		213+50							0					
		219+50							0					
						50				44				
		220+00							47					
						50				73				
		220+50							32					
						50				30				
		221+00							0					
		224+50							0					
						50				69				
		225+00							74					
						50				136				
		225+50							73					
						50				144				
		226+00							82					
						50				146				
		226+50							76					
						50				154				
		227+00							90					
						50				171				
		227+50							95					
						50				171				
		228+00							90					
						50				184				
		228+50							109					
						50				195				
		229+00							102					
						50				94				
		229+50							0					
		236+00							0					
						50				86				
		236+50							93					
						50				192				
		237+00							114					
						50				325				
		237+50							237					
						50				681				
		238+00							498					
						50				801				
		238+50							367					
		238+76.24	=238+83.41	EQ. =-7.17'		42.83'				828				
		239+00							677					
						50				1323				
		239+50							752					
						50				1340				
		240+00							695					
						50				1403				
		240+50							820					
						50				1386				
		241+00							677					
						50				1329				
		241+50							758					
						50				1396				
		242+00							750					
						50				1381				
		242+50							742					
						50				1274				
		243+00							634					
		CARRIED FORWARD												
		COLUMN FOOTINGS								15606				

GRADES V. C.	GRADES % GRADE	STATION	ELEVATION ON TANGENT	ELEVATION ON CURVES	CORR V. C.	DIST	AREA	CU. YDS.	*STONE FILL TYPE IV (MOD.) AREA	CU. YDS.	AREA	CU. YDS.	AREA	CU. YDS.
		243+00							634					
						50				1043				
		243+50							492					
						50				825				
		244+00							399					
						50				637				
		244+50							289					
						50				499				
		245+00							250					
						50				451				
		245+50							237					
						50				474				
		246+00							275					
						50				569				
		246+50							340					
						50				561				
		247+00							266					
						50				594				
		247+50							376					
						50				708				
		248+00							389					
						50				770				
		248+50							443					
						50				819				
		249+00							441					
						50				1309				
		249+50							973					
						50				1161				
		250+00							281					
						50				282				
		250+50							24					
						50				56				
		251+00							37					
						50				56				
		251+50							23					
						50				21				
		252+00							0					
		267+50							0					
						50				125				
		268+00							135					
						50				307				
		268+50							197					
						50				511				
		269+00							355					
		269+39.89	=270+85.60	EQ. =-145.71		54.49				844				
		271+00							481					
						50				1029				
		271+50							630					
						50				1143				
		272+00							604					
						50				845				
		272+50							309					
						50				338				
		273+00							56					
						50				136				
		273+50							91					
						50				84				
		274+00							0					
		285+00							0					
						50				134				
		285+50							145					
						50				256				
		286+00							132					
						50				122				
		286+50							0					
										16709				
		GRAND TOTAL								37533				

/DESIGN/78D096/DD096.DGN

DD096RKJ.I

PROJECT NAME SEARSBURG-WILMINGTON
PROJECT NUMBER F 010-I(18)

STATE OF VERMONT
AGENCY OF TRANSPORTATION
RIGHT OF WAY PLANS
DETAIL SHEET

TABLE OF PROJECT PROPERTY ACQUISITION

PARCEL NO.	GRANTOR	SHEET NO.	BEGINNING STATION	ENDING STATION	TAKING	REM.	RIGHTS	TITLE TAKEN	DATE	TOWN OR CITY RECORDED	BK.	PG.	REMARKS
1A	RICE, MARJORIE L.	22	99+00 RT.	102+43 RT.	0.10A±			WD	09-26-89	SEARSBURG	13	122	
			98+58 RT.	102+43 RT.			SLOPE (P) 0.17A±						
			98+70 RT.				CULVERT (P)						
	NOW OWNED BY ZUCKER, MICHAEL		98+94 RT.				DRIVE (T)						11' BIT. MM 0359
			99+30 RT.	102+43 RT.			CONST. EASE. (T) 0.07A±						3,050 S.F.±
			102+43 RT.				DITCH (P)						
			96+30 RT.	102+43 RT.	16.29A±								
1B		22	100+97 RT.	102+43 RT.	0.08A±		ALL R.T. & I.						HWY. EASE. VT. RTE. 9
2A	USGEN NEW ENGLAND, INC.,	22	100+97 LT.	108+16 LT.	0.23A±			WDOE		SEARSBURG			
	JOINED BY VERMONT LAND		98+27 LT.	98+55 LT.			CONST. (T) 300 S.F.±						
	TRUST, INC.		98+41 LT.				DITCH & DRAINAGE (P)						
			102+95 LT.	103+23 LT.			CONST. (T) 170 S.F.±						
			103+07 LT.				DRAINAGE (P)						
			105+40 LT.	105+64 LT.			CONST. (T) 420 S.F.±						
			105+52 LT.				CUL.,DIT.& DR. (P)						
			107+75 LT.				DRAINAGE (P)						
2B		22	102+43 RT.	106+42 RT.	0.25A±			WDOE		SEARSBURG			STONE WALL 10,890 S.F.±
			102+43 RT.	102+63 RT.			DITCH & CULVERT (P)						
			102+43 RT.	106+45 RT.			CONST. (T) 4,110 S.F.±						
			102+75 RT.	106+43 RT.			SLOPE (P) 0.16A±						6,850 S.F.±
			105+97 RT.				REMOVE (T)						STONE WALL
			102+96 RT.	105+97 RT.			ALL R.T.& I.						STONE WALL
2C		22,23	106+87 RT.	161+67 RT.	7.0A±			WDOE		SEARSBURG			304,920 S.F.± STONE WALL
		23A	106+92 RT.	110+38 RT.			SLOPE (P) 2,710 S.F.±						
		24,25	106+93 RT.	110+37 RT.			CONST. (T) 3,330 S.F.±						
		26	110+20 LT.				DRAINAGE (P)						
			110+47 RT.				DRIVE (T)						12' GRAVEL MM 0381
			110+49 RT.	REV. 113+35 RT.			CONST. (T) 2,710 S.F.±						
			110+50 RT.	REV. 113+14 RT.			SLOPE (P) 1,480 S.F.±						
			110+90 RT.	110+95 RT.			REMOVE (T)						STONE WALL
			110+90 RT.	110+99 RT.			ALL R.T. & I.						STONE WALL
			112+49 LT.				DRAINAGE (P)						
			REV. 115+30 RT.	REV. 119+24 RT.			CONST. (T) 3,190 S.F.±						
			REV. 115+50 RT.				DRAINAGE (P)						
			REV. 115+59 RT.	REV. 115+84 RT.			SLOPE (P) 190 S.F.±						
			REV. 115+84 RT.	REV. 116+20 RT.			CHANNEL (P) 510 S.F.±						INCLUDE CONCRETE FOOTING
			REV. 116+35 RT.	REV. 116+51 RT.			CHANNEL (P) 120 S.F.±						INCLUDE CONCRETE FOOTING
			REV. 117+91 RT.				DRAINAGE (P)						
			REV. 121+19 RT.	REV. 130+10 RT.			CONST. (T) 0.18 A±						7,930 S.F.±
			REV. 121+42 RT.	REV. 121+84 RT.			CHANNEL (P) 240 S.F.±						
			REV. 121+84 RT.	REV. 124+31 RT.			SLOPE (P) 800 S.F.±						
			REV. 123+00 RT.				DRAINAGE (P)						
			REV. 124+81 RT.				CUL.,DIT.& DR. (P) 235 S.F.±						
			REV. 127+00 RT.	REV. 129+60 RT.			SLOPE (P) 770 S.F.±						
			REV. 128+00 RT.				DRAINAGE (P)						
			REV. 129+50 LT.	REV. 130+34 LT.			SLOPE (P) 1,180 S.F.±						
			REV. 129+50 LT.	REV. 130+72 LT.			CONST. (T) 1,320 S.F.±						
	PARCEL 2C CONTINUED ON FOLLOWING SHEET												

REVISION NO.	SHEET	DESCRIPTION OF REVISION	DATE	MADE BY	APPROVED BY
1	20	PARCEL NO. 31 DAVIE. CHANGE BEG. STA. OF CONST. EASE. (T) FROM 207+05 LT. TO 206+35 LT. AREA IS NOW 0.15A±. PER C.O. 7344.	7-25-89	A.S.J.	L.W.B.
2	13	PARCEL NO. 9 TOWNE. CHANGE AREA OF CONST. EASE. (T) THAT ENDS AT 206+80 LT. TO 0.07A±, 3000 S.F.± PER C.O. 7345.	7-25-89	A.S.J.	L.W.B.
3	8,22	PARCEL NO. 14 DOUGHERTY. ADD REMOVE & RESET (T) FOR PICKET FENCE AT 242+75 LT.~ 243+75 LT. PER C.O. 7360.	8-18-88	J.D.P.	L.W.B.
4	12	PARCEL NO. 7 PENSON. CHANGE SPELLING OF LAST NAME TO PENSON. PER C.O. 7360.	8-18-88	J.D.P.	L.W.B.
5	9,23 24,25	PARCEL NO. 2 NEW ENGLAND POWER CO. CHANGE SLOPE AT 117+12 RT.~ 117+78 RT. TO (T). CHANGE SLOPE 136+00 RT.~ 141+00 RT. TO (T). ADD SLOPE 141+00 RT.~ 142+35 RT. (P), 0.08A±, 3300 S.F.±. PER C.O. 7361.	8-18-88	J.D.P.	L.W.B.
6	11,26	PARCEL NO. 4 MAY. ADD WIRE MESH TO FENCE AT 172+50 LT.~ 175+00 LT. ADD THE FOLLOWING RIGHTS: REMOVE & RESET (T) FOR WOOD RAIL FENCE AT 171+77 LT.~ 172+00 LT. AND AT 172+20 LT.~ 172+50 LT. PER C.O. 7362.	8-18-88	J.D.P.	L.W.B.
7	11,12 26,27 29	PARCEL NO. 3B, 5A, 5B, 5D. DRAW SOUTHERLY REMAINDER'S PROPERTY LINE. PER C.O. 7433.	10-27-88	M.J.R.	J.D.P.
8	12,28	PARCEL NO. 5 GUILLE. ADD PARCEL TO DETAIL SHEET. SHOW REMAINDER & SLY PROPERTY LINE. PER C.O. 7434.	10-27-88	M.J.R.	J.D.P.
9	11,13 26,27 28,29	PARCEL NO. 4B, 8B, 8C, 9B, 9D, 9F. DRAW SOUTHERLY REMAINDER'S PROPERTY LINES ALONG RIVER'S EDGE. CALCULATE REMAINDERS AND ADD TO DETAIL SHEET. PER C.O. 7435.	10-27-88	M.J.R.	J.D.P.
10	18	PARCEL NO. 26 CHIMNEY HILL ASSOC. CHANGE AREA OF TAKING FROM 2.4A± TO 1.4A± PER C.O. 7457.	11-29-88	M.J.R.	J.D.P.
11	14,28	PARCEL NO. 9 TOWNE & MCCONNELL. ADD REMOVE & RESET (T) FOR WOOD FENCE AT 197+75 LT.~ 198+25 LT. & 198+40 LT.~ 199+15 LT. PER C.O. 7522.	12-27-88	M.J.R.	J.D.P.

DR.(P)- DRAINAGE RIGHT
DIT.(P)- DITCHING RIGHT
CH.(P)- CHANNEL RT.
DRIVE (T)- DRIVE RIGHT
CUL.(P)- CULVERT RIGHT
[W]- WATER SOURCES

PRESENT R.O.W.
TAKING WITHOUT ACCESS
TAKING WITHOUT ACCESS ALONG PROPERTY LINE
TAKING WITH ACCESS
(P) PERMANENT EASEMENT
(T) TEMPORARY EASEMENT

LEGEND
C&T (P) CLEARING & TRIMMING
CZ (P) CLEAR ZONE
CONST. (T) CONSTRUCTION EASEMENT
SR SR SLOPE RIGHTS
PROPERTY LINE
TOP OF CUT
TOE OF SLOPE
UE (P) PERMANENT UTILITY EASEMENT

APPROVED: LAWRENCE W. BLISS DATE: 07-05-88
CHIEF, PLANS & TITLES

R.O.W. PLANS REVISED

SEARSBURG - WILMINGTON
F 010-1 (18)
SHEET 8 OF 36

ACCT.GFunk
\\vaot_cadd\filingcabinet$\78D096\RightOfWay\llnd.dgn
DATE PLOTTED 10-JAN-2002

SHEET 29 OF 435
JAN 25 2002

STATE OF VERMONT
AGENCY OF TRANSPORTATION
RIGHT OF WAY PLANS
DETAIL SHEET

TABLE OF PROJECT PROPERTY ACQUISITION

PARCEL NO.	GRANTOR	SHEET NO.	BEGINNING STATION	ENDING STATION	TAKING	REM.	RIGHTS			TITLE TAKEN	DATE	TOWN OR CITY RECORDED	BK.	PG.	REMARKS
	PARCEL 2C CONTINUED FROM		REV. 129+60 RT.	REV. 129+89 RT.			CHANNEL	(P)	90 S.F.±						
	PERVIOUS		REV. 129+71 RT.				DRAINAGE	(P)							
			REV. 130+34 LT.	REV. 130+59 LT.			CHANNEL	(P)	130 S.F.±						
			REV. 132+68 RT.	REV. 134+46 RT.			CONST.	(T)	1,620 S.F.±						
			REV. 132+79 RT.	REV. 133+15 RT.			CHANNEL	(P)	360 S.F.±						
			REV. 132+93 RT.	REV. 134+25 RT.			SLOPE	(P)	1,540 S.F.±						
			REV. 133+06 LT.	REV. 136+00 LT.			CONST.	(T)	2,830 S.F.±						
			REV. 133+16 LT.	REV. 133+44 LT.			CHANNEL	(P)	360 S.F.±						
			REV. 133+28 RT.				DRAINAGE	(P)							
			REV. 133+29 LT.	REV. 135+35 LT.			SLOPE	(P)	3,990 S.F.±						
			REV. 134+67 RT.	REV. 135+87 RT.			CONST.	(T)	1,010 S.F.±						
			REV. 135+16 RT.	REV. 135+62 RT.			SLOPE	(P)	140 S.F.±						
			REV. 136+53 LT.	142+11 LT.			CONST.	(T)	0.14A±						6,100 S.F.±
			REV. 136+87 RT.	142+50 RT.			CONST.	(T)	0.12A±						5,100 S.F.±
			REV. 136+93 LT.	141+19 LT.			SLOPE	(P)	0.23A±						9,870 S.F.±
			REV. 137+00 LT.				DRAINAGE	(P)							
			139+59 RT.	142+31 RT.			SLOPE	(P)	0.12A±						5,400 S.F.±
			140+87 RT.				DRAINAGE	(P)							
			141+17 LT.	141+95 LT.			CHANNEL	(P)	1,250 S.F.±						
			142+26 RT.	142+38 RT.			CHANNEL	(P)	45 S.F.±						
			144+50 RT.	144+77 RT.			CHANNEL	(P)	130 S.F.±						
			144+77 RT.	144+97 RT.			SLOPE	(P)	80 S.F.±						
			144+72 RT.	145+50 RT.			CONST.	(T)	500 S.F.±						
			145+51 RT.				DITCH & DRAINAGE	(P)							
			146+18 RT.	148+00 RT.			EXCEPT & RESERVE								STONEWALLS AND FOUNDATIONS
			148+25 RT.	150+00 RT.			CONST.	(T)	750 S.F.±						
			148+40 RT.	148+67 RT.			SLOPE	(P)	70 S.F.±						
			149+00 RT.				DRAINAGE	(P)							
			152+25 RT.	153+13 RT.			SLOPE	(P)	230 S.F.±						
			152+50 RT.	153+42 RT.			CONST.	(T)	620 S.F.±						
			153+68 RT.	154+28 RT.			CONST.	(T)	430 S.F.±						
			153+94 RT.	154+21 RT.			SLOPE	(P)	25 S.F.±						
			154+65 RT.				DRAINAGE	(P)							
			158+00 RT.	160+35 RT.			SLOPE	(P)	850 S.F.±						
			158+70 RT.				DRAINAGE	(P)							
			160+29 RT.	161+67 RT.			CONST.	(T)	530 S.F.±						
			161+50 RT.				DITCH & DRAINAGE	(P)							
			163+65 RT.				DITCH & DRAINAGE	(P)							
2D		23	REV. 112+78.0 LT.	REV. 116+81.3 LT.	3,390 S.F±					WDOE		SEARSBURG			
			REV. 112+57 LT.	REV. 113+57 LT.			CONST.	(T)	650 S.F.±						
			REV. 112+87 LT.	REV. 115+59 LT.			CHANNEL	(P)	930 S.F.±						
			REV. 116+65 LT.	REV. 117+16 LT.			CHANNEL	(P)	200 S.F.±						
			REV. 117+54 LT.	REV. 117+69 LT.			CHANNEL	(P)	20 S.F.±						
2E		23A	REV. 128+24.3 LT.	REV. 129+50.0 LT.	0.15A±					WDOE		SEARSBURG			TO BE RELINQUISHED TO THE TOWN OF SEARSBURG
2F		24	W. CONN. 22+84.8 LT.	W. CONN. 24+00.0 LT.	1,560 S.F.±					WDOE		SEARSBURG			0.04A± TO BE RELINQUISHED TO THE TOWN OF SEARSBURG
			W. CONN. 23+00 LT.				DRAINAGE	(P)							

REVISION NO.	SHEET	DESCRIPTION OF REVISION	DATE	MADE BY	APPROVED BY
12	22	PARCEL NO. 1 RICE. ADD THE FOLLOWING TOPO. STONEWALL AT 98+30 RT., SHRUB AT 98+80 RT. REMOVE APPLE TREE AT 99+95 RT. PER C.O. 7523.	12-27-88	M. J. R.	J. D. P.
13	17, 33	PARCEL NO. 21 JOYCE. ADD DRIVE TOPO. ADD SIGN AT 263+40 LT. PERSONAL PROPERTY. PER C.O. 7524.	12-27-88	M. J. R.	J. D. P.
14	18, 35	PARCEL NO. 25 KLIMAS. CHANGE DRIVE FROM 272+44 LT. TO 273+36 LT. PER C.O.7411.	1-3-89	J. D. P.	L. W. B.
15	1, 2, 8 22	PARCEL NO. 1 RICE. CHANGE SLOPE LIMITS. CHANGE BEG. STA. OF SLOPE (P) FROM 96+77 RT. TO 98+58 RT. CHANGE AREA FROM 0.24A± TO 0.17A±. CHANGE CUL. (P) FROM 98+43 RT. TO 98+70 RT. PER C.O. 7528.	1-16-89	M. J. R.	J. D. P.
16	19, 32 33	PARCEL NO. 29 CEDERGREN. CHANGE ENDING STA. OF 29A FROM 255+10 LT. TO 254+30 LT. 0.70A±. CHANGE RUNNING DISTANCE. PER C.O. 7614.	2-28-89	M. J. R.	L. W. B.
17	19, 29	PARCEL NO. 30 BRESCIA. DELETE PARCEL 30B & 30D. PER C.O. 7621.	2-28-89	M. J. R.	L. W. B.
18	10, 29	PARCEL NO. 2 NEW ENGLAND POWER CO. CHANGE BEG. STA. OF 2K TO 212+04 RT. & INCREASE AREA TO 0.44A±. CHANGE BEGIN. STA. OF 2P TO 212+04 RT. AND INCREASE AREA TO 0.87A±. PER C.O. 7618.	2-28-89	M. J. R.	L. W. B.
19	14, 29	PARCEL NO. 10 MORSE. CHANGE BEG. STA. TO 211+28 LT. & INCREASE AREA TO 0.54A±. CHANGE START OF CONST. EASE. TO 210+77 LT. 0.14A±. CHANGE START OF SLOPE TO 210+85 LT., 1.10A±. ON PARCEL 10C CHANGE BEG. STA. TO 212+04 RT., 1.01A±. PER C.O. 7620.	2-28-89	M. J. R.	L. W. B.
20	14, 32 33	PARCEL NO. 10 MORSE. CHANGE AREA TO 2.40A± ON PARCEL 10B. CHANGE RUNNING DISTANCES. PER C.O. 7613.	2-28-89	M. J. R.	L. W. B.
21	12, 29	PARCEL NO. 5 GUILLE. CHANGE ENDING STA. OF 5H & 5D TO 22+04 RT. REDUCE AREA OF 5H TO 0.37A± & 5D TO 0.43A±. PER C.O. 7619.	2-28-89	M. J. R.	L. W. B.

DR. (P)- DRAINAGE RIGHT
DIT. (P)- DITCHING RIGHT
CH. (P)- CHANNEL RT.
DRIVE (T)- DRIVE RIGHT
CUL. (P)- CULVERT RIGHT
[W]- WATER SOURCES

PRESENT R.O.W.
TAKING WITHOUT ACCESS
TAKING WITHOUT ACCESS ALONG PROPERTY LINE
TAKING WITH ACCESS
(P) PERMANENT EASEMENT
(T) TEMPORARY EASEMENT

LEGEND
C&T (P) CLEARING & TRIMMING
CZ (P) CLEAR ZONE
CONST. (T) CONSTRUCTION EASEMENT
SR SR SLOPE RIGHTS
P L PROPERTY LINE
TOP OF CUT
TOE OF SLOPE
UE (P) PERMANENT UTILITY EASEMENT

APPROVED: LAWRENCE W. BLISS DATE: 07-05-88
CHIEF, PLANS & TITLES

R. O. W. PLANS REVISED

SEARSBURG - WILMINGTON
F 010-1 (18)
SHEET 9 OF 36

ACCT. TFrench
\\vaot_cadd\filingcabinet$\78D096\RightOfWay\lind.dgn
DATE PLOTTED 23-JUL-2001

SEP 21 2001

STATE OF VERMONT
AGENCY OF TRANSPORTATION
RIGHT OF WAY PLANS
DETAIL SHEET

TABLE OF PROJECT PROPERTY ACQUISITION

PARCEL NO.	GRANTOR	SHEET NO.	BEGINNING STATION	ENDING STATION	TAKING	REM.	RIGHTS	TITLE TAKEN	DATE	TOWN OR CITY RECORDED	BK.	PG.	REMARKS
2G		24	W. CONN. 21+66.4 RT.	W. CONN. 22+39.7 RT.	240 S.F.±			WDOE		SEARSBURG			TO BE RELINQUISHED TO THE TOWN OF SEARSBURG
			W. CONN. 22+26 RT.	W. CONN. 23+61 RT.			CONST. (T) 650 S.F.±						
2H		24	W. CONN. 23+44.9 RT.	W. CONN. 24+00.0 RT.	260 S.F.±			WDOE		SEARSBURG			TO BE RELINQUISHED TO THE TOWN OF SEARSBURG
2I		24, 25	150+69.6 LT.	163+67 LT.	0.46A±			WDOE		SEARSBURG			19,900 S.F.±
		26	147+32 LT.	150+46 LT.			CONST. (T) 2,710 S.F.±						
			147+48 LT.	148+26 LT.			SLOPE (P) 290 S.F.±						
			148+95 LT.	150+29 LT.			SLOPE (P) 1,870 S.F.±						
			152+20 LT.	152+58 LT.			EXCEPT & RESERVE						FOUNDATION - DO NOT DISTURB
			153+61 LT.	154+24 LT.			EXCEPT & RESERVE						FOUNDATION - DO NOT DISTURB
			154+52 LT.	163+64 LT.			CONST. (T) 0.19A±						8,090 S.F.±
			154+63 LT.	163+66 LT.			SLOPE (P) 1.40A±						60,980 S.F.±
			163+66 LT.				DITCH (P)						
2J	NOT USED												
2K		29	212+04 RT.	216+92 RT.	0.22A±			WDOE		WILMINGTON			
			211+66 RT.	212+75 RT.			SLOPE (P) 600 S.F.±						
			215+00 RT.				CUL., DIT & DR. (P)						
			215+50 RT.	216+97 RT.			CONST. (T) 1,550 S.F.±						
			215+75 RT.				DRAINAGE (P)						
			215+68 RT.	216+96 RT.			SLOPE (P) 2,680 S.F.±						
2L		30, 31	217+87 RT.	229+48 RT.	0.73A±			WDOE		WILMINGTON			31,700 S.F.±
			217+87 RT.	217+95 RT.			SLOPE (P) 140 S.F.±						
			217+87 RT.	218+05 RT.			CONST. (T) 400 S.F.±						
			218+50 RT.				CUL., DIT. & DR. (P)						
			223+45 RT.				DRAINAGE (P)						
			225+00 RT.	228+50 RT.			CHANNEL (P) 0.28A±						12,197 S.F.±
			226+00 RT.				ACCESS (P)						FROM TH 31 TO CHANNEL (P)
			228+30 RT.	229+00 RT.			SLOPE (P) 140 S.F.±						

REVISION NO.	SHEET	DESCRIPTION OF REVISION	DATE	MADE BY	APPROVED BY
22	20, 29	PARCEL NO. 31 DAVIE. CHANGE PROPERTY LINE AND ENDING STA. OF 31A AT 212+04 LT. REDUCE AREA BY 0.02A±. REMOVE SLOPE AREA AND CONST. EASE. PER C.O. 7622.	2-28-89	M.J.R.	L.W.B.
23	11, 26	PARCEL NO. 3 LINZER-HULTEN. OMIT DITCH (P) 167+70 LT.~168+05 LT. ADD DRIVE AT 167+41 LT. PER C.O. 7425.	4-10-89	M.J.R.	L.W.B.
24	16	PARCEL NO. 16 BEAUDRY. REVISE AREA OF 16A FROM 0.14A± TO 0.16A±. PER C.O. 7676.	4-26-89	M.J.R.	L.W.B.
25	13, 14 28, 29	PARCEL NO. 9 TOWNE. CHANGE TITLE TO DONALD M. TOWNE. REDUCE AREA OF 9B. ADD NEW RIGHTS. DELETE 9D AND ADD NEW RIGHTS TO 9F. MODIFY REMAINDER. PER C.O. 7687.	5-19-89	M.J.R.	J.D.P.
26	19	PARCEL NO. 30 BRESCIA. CHANGE TAKE AREA OF 30A FROM 1.90A± TO 1.12A±. PER C.O. 7688.	5-19-89	M.J.R.	J.D.P.
27	27	PARCEL NO. 6 U.S. DEPT. OF AGRICULTURE. CHANGE STA. 174+86 25' RT. TO 174+86 22' RT. CHANGE STA. 175+99 60' LT. TO 174+66 60' LT. PER C.O. 7716.	6-15-89	M.J.R.	J.D.P.
28	14, 29 30	PARCEL NO. 10 MORSE. CHANGE END OF SLOPE FROM 224+50 LT. TO 221+00 LT. 1.10A± TO 1.04A±. CHANGE DITCH FROM 219+00 LT.~220+90 LT. TO 218+50 LT.~219+25 LT. CHANGE DRIVE STA'S TO 218+50 LT. & 225+75 LT. CHANGE BEGIN ON CONST. EASE. FROM 223+00 LT. TO 225+00 LT., 0.02A±, 1075 S.F.±. CHANGE DITCH AT 225+00 LT. TO CUL. (P). ADD 225+00 LT.~225+50 LT. SLOPE (P), 0.02A±, 800 S.F.±. 222+63 LT.~223+73 LT. EASE. TO INSTALL UNDERDRAIN. DITCH (P) 223+55 LT.~224+95 LT. PER C.O. 7720	6-19-89	M.J.R.	J.D.P.
29	17, 33	PARCEL NO. 19 GREENE: REDUCED TAKE OF PARCEL 19B FROM 0.35A± TO 0.25A± PER. CO. 7739	7-11-89	J.D.P.	F.J.M.
30	11, 26 27	PARCEL NO. 4 MAY: ADD JONI R. TO TITLE PER. CO. 07744	7-24-89	A.S.J.	J.D.P.
31	16, 32	PARCEL NO. 15 SZAREJKO: ADD BRENDA I. TO TITLE PER. CO. 7747	7-24-89	A.S.J.	J.D.P.

ACCT. TFrench
\\vaot_cadd\filingcabinet$\78D096\RightOfWay\lind.dgn
DATE PLOTTED 09-AUG-2001

DR. (P)- DRAINAGE RIGHT
DIT. (P)- DITCHING RIGHT
CH. (P)- CHANNEL RT.
DRIVE (T)- DRIVE RIGHT
CUL. (P)- CULVERT RIGHT
[W]- WATER SOURCES

PRESENT R.O.W.
TAKING WITHOUT ACCESS
TAKING WITHOUT ACCESS ALONG PROPERTY LINE
TAKING WITH ACCESS
(P) PERMANENT EASEMENT
(T) TEMPORARY EASEMENT

LEGEND
C&T (P) CLEARING & TRIMMING
CZ (P) CLEAR ZONE
CONST. (T) CONSTRUCTION EASEMENT
SR SR SLOPE RIGHTS
P L PROPERTY LINE
TOP OF CUT
TOE OF SLOPE
UE (P) PERMANENT UTILITY EASEMENT

APPROVED: LAWRENCE W. BLISS DATE: 07-05-88
CHIEF, PLANS & TITLES

R.O.W. PLANS REVISED

SEARSBURG - WILMINGTON
F 010-1 (18)
SHEET 10 OF 36

SEP 21 2001

STATE OF VERMONT
AGENCY OF TRANSPORTATION
RIGHT OF WAY PLANS
DETAIL SHEET

TABLE OF PROJECT PROPERTY ACQUISITION

PARCEL NO.	GRANTOR	SHEET NO.	BEGINNING STATION	ENDING STATION	TAKING	REM.	RIGHTS	TITLE TAKEN	DATE	TOWN OR CITY RECORDED	BK.	PG.	REMARKS
2M		31, 32	236+25 RT.	251+20 RT.	1.62A±			WDOE		WILMINGTON			70,540 S.F. ±
		33	233+50 RT.				DRAINAGE (P)						
			236+10 RT.	238+00 RT.			CONST. (T) 1,630 S.F. ±						
			236+22 RT.	237+50 RT.			SLOPE (P) 770 S.F. ±						
			236+35 RT.				DIT. & DR. (P)						
			237+27 RT.	240+50 RT.			CHANNEL (T) 0.28A±						12,140 S.F. ±
			237+60 RT.	238+46 RT.			SLOPE (P) 200 S.F. ±						
			238+50 RT.				CUL., DIT. & DR. (P)						
			239+15 RT.	250+38 RT.			SLOPE (P) 0.62A±						27,220 S.F. ±
			244+05 RT.				DRAINAGE (P)						
			245+50 RT.				DRAINAGE (P)						
			246+88 RT.				DRAINAGE (P)						
			248+80 RT.										STEPS D-9
			250+10 RT.	250+58 RT.			CONST. (T) 320 S.F. ±						
			251+00 RT.				DRAINAGE (P)						
			253+20 RT.				DIT. & DR. (P)						
			254+60 RT.				DIT. & DR. (P)						
2N		33, 35	265+38 RT.	292+47 RT.	2.63A±			WDOE		WILMINGTON			114,650 S.F. ±
		36	263+50 RT.										35' GRAVEL DRIVE MM 0188
			263+73 RT.	265+04 RT.			CONST. (T) 1,000 S.F. ±						
			264+00 RT.	266+05 RT.			SLOPE (T) 2,150 S.F. ±						
			264+36 RT.				CUL. & DR. (P)						
			267+60 RT.	276+31 RT.			SLOPE (P) 0.24A±						10,600 S.F. ±
			272+18 RT.				CUL., DIT. & DR. (P)						
			272+90 RT.	281+10 RT.			CONST. (T) 0.18A±						8,050 S.F. ±
			273+67 RT.	274+08 RT.			CUL. DIT. & DR. (P)						
			276+18 RT.				DIT. & DR. (P)						
			276+80 RT.	277+26 RT.			SLOPE (T) 200 S.F. ±						
			277+65 RT.	280+50 RT.			SLOPE (T) 4,020 S.F. ±						
			278+50 RT.				CUL., DIT. & DR. (P)						
			280+00 RT.				CUL., DIT. & DR. (P)						
			281+60 RT.	283+58 RT.			CONST. (T) 1,940 S.F. ±						
			281+50 RT.				DRIVE (T)						32' GRAVEL MM 0152
			281+57 RT.	283+28 RT.			SLOPE (T) 1,270 S.F. ±						
			285+00 RT.				DIT. & DR. (P)						
			285+00 RT.	286+00 RT.			SLOPE (T) 200 S.F. ±						
			288+96 RT.				DIT. & DR. (P)						
			289+97 RT.	291+77 RT.			CONST. (T) 1,850 S.F±						
			290+13 RT.	291+60 RT.			SLOPE (T) 2,860 S.F±						

REVISION NO.	SHEET	DESCRIPTION OF REVISION	DATE	MADE BY	APPROVED BY
32	18, 36	PARCEL NO. 27 GREEN MOUNTAIN POWER CORP. CHANGE DRIVE WIDTH FROM 16' TO 24' AT STA. 290+50 LT. PER C.O. 7752.	8-30-89	M.J.R.	J.D.P.
33	16, 32	PARCEL NO. 16 BEAUDRY. INSTALL DRIVE AT 246+00 LT. PER C.O. 7770.	9-5-89	M.J.R.	J.D.P.
34	13, 27	PARCEL NO. 8 DAILEY. CHANGE DRIVE AT 183+40 LT. TO 24' DRIVE. CHANGE DRIVE AT 185+40 TO 50' RADII. PER C.O. 7775.	9-20-89	M.J.R.	J.D.P.
35	14, 30	PARCEL NO. 10 MORSE. ADD DRIVE CUL. (T) AT STA. 222+50 LT. PER C.O. 7808.	10-16-89	A.S.J.	J.D.P.
36	17, 33	PARCEL NO. 20 MORSE. ADD CULVERT TOPO AND CUL. (T) AT STA. 262+34 LT. ~ 262+63 LT. PER C.O. 7792.	10-17-89	M.J.R.	J.D.P.
37	17, 33	PARCEL NO. 21 JOYCE. PARCEL NO. 22 HRNCIAR. INCREASE SLOPE ON PARCEL NO. 21 BY 450 S.F. INCREASE CONST. EASE. BY 430 S.F. DECREASE LIKE AMOUNTS ON PARCEL NO. 22 PER C.O. 7816.	10-27-89	M.J.R.	J.D.P.
38	17, 33	PARCEL NO. 19 GREENE. ADD TOPO NOTE TO EXISTING CELLAR DRAIN. SHORTEN DRAIN OUTLET INTO SPECIAL DITCH. ADD INSTALL (T) AT STA. 259+88 RT.~ 260+10 RT. FOR CELLAR DRAIN. PER C.O. 7813.	10-31-89	M.J.R.	J.D.P.
39	14, 28	PARCEL NO. 9 TOWNE. CHANGE STA. OF REMOVE & RESET (T) TO 201+10 LT. PER C.O. 7818	10-31-89	A.S.J.	J.D.P.
40	14, 30	PARCEL NO. 10 MORSE. REVISE CELLAR DRAINS CHANGE CULVERT (T) FROM 222+50 LT. TO 222+00 LT. PER C.O. 7853	12-14-89	A.S.J.	J.D.P.
41	8, 24	PARCEL NO. 2C. CHANGE ENDING STA. OF SLOPE SLOPE FROM 135+30 RT. TO 131+18 RT. DECREASE AREA TO 0.52A±. CHANGE ENDING STA OF DIT. & DR. FROM 131+90 RT. TO 130+50 RT ADD SLOPE (T) AT 132+15 RT.~ 135+30 RT., 0.20A±. PER C.O. 7854.	12-19-89	M.J.R.	J.D.P.

ACCT. GFunk
\\vaot_cadd\filingcabinet$\78D096\RightOfWay\lind.dgn
DATE PLOTTED 10-JAN-2002

DR. (P)- DRAINAGE RIGHT
DIT. (P)- DITCHING RIGHT
CH. (P)- CHANNEL RT.
DRIVE (T)- DRIVE RIGHT
CUL. (P)- CULVERT RIGHT
[W]- WATER SOURCES

PRESENT R.O.W.
TAKING WITHOUT ACCESS
TAKING WITHOUT ACCESS ALONG PROPERTY LINE
TAKING WITH ACCESS
(P) PERMANENT EASEMENT
(T) TEMPORARY EASEMENT

LEGEND
C&T (P) CLEARING & TRIMMING
CZ (P) CLEAR ZONE
CONST. (T) CONSTRUCTION EASEMENT
SR SR SLOPE RIGHTS
P L PROPERTY LINE
TOP OF CUT
TOE OF SLOPE
UE (P) PERMANENT UTILITY EASEMENT

APPROVED: LAWRENCE W. BLISS DATE: 07-05-88
CHIEF, PLANS & TITLES

R.O.W. PLANS REVISED

SEARSBURG - WILMINGTON
F 010-1 (18)
SHEET 11 OF 36

JAN 25 2002

STATE OF VERMONT
AGENCY OF TRANSPORTATION
RIGHT OF WAY PLANS
DETAIL SHEET

TABLE OF PROJECT PROPERTY ACQUISITION

PARCEL NO.	GRANTOR	SHEET NO.	BEGINNING STATION	ENDING STATION	TAKING	REM.	RIGHTS	TITLE TAKEN	DATE	TOWN OR CITY RECORDED	BK.	PG.	REMARKS
2Q													
2R	NEW ENGLAND POWER COMPANY							COND	08-24-90	SEARSBURG	13	189	UTILITIES
3A	LINZER-HULTEN, CHARLENE	26	163+66 LT.	171+86 LT.	0.36A±			COND	08-25-90	SEARSBURG	13	189	
	HULTEN, JOHN P.		163+66 LT.	168+60 LT.			CONST. EASE. (T) 0.06A±)						2,500 S.F.±
			163+66 LT.	164+88 LT.			SLOPE (P) 0.02A±)						872 S.F.±
			163+66 LT.				DITCH (P)						
			167+41 LT.				DRIVE (T)						28' GRAVEL MM 0488
			169+92 LT.				DRIVE (T)						15' GRAVEL MM 0493
			163+66 LT.	171+74 LT.	9.83A±								
3B		26	169+43 RT.	172+37 RT.	0.20A±			WD		SEARSBURG			
3C			163+67 RT.	172+13 RT.	0.87A±		ALL R.T. & I.						HWY. EASE. VT. RTE. 9
4A	MAY, JEFFREY HAYWARD &	26,27	171+74 LT.	174+98 LT.	0.29A±	4.71A±		COND	08-25-90	SEARSBURG	13	189	
	JONI R.		171+77 LT.	172+00 LT.			REMOVE & RESET (T)						WOOD RAIL FENCE
			172+85 LT.	173+50 LT.			SLOPE (T) 0.01A±)						300 S.F.±
			172+12 LT.				DRIVE (T)						15' GRAVEL MM 0497
			172+20 LT.	172+50 LT.			REMOVE & RESET (T)						WOOD RAIL FENCE
			172+50 LT.	175+00 LT.			REMOVE & RESET (T)						WIRE MESH FENCE
4B		26,27	172+13 RT.	174+82 RT.	0.24A±								
4C		26,27	171+86 LT.	174+90 LT.	0.43A±		ALL R.T. & I.						HWY. EASE. VT. RTE. 9
5A	GUILLE, PETER JR.	26	163+75 RT.	169+59 RT.	0.36A±			COND	08-25-90	SEARSBURG	13	189	

REVISION NO.	SHEET	DESCRIPTION OF REVISION	DATE	MADE BY	APPROVED BY
42	17,33	PARCEL NO. 19 GREENE. ADJUST LOCATION OF LEACH FIELD. STA. 260+32 RT. ~ 260+70 RT. PER C.O. 7861	01-15-90	M.J.R.	J.D.P.
43	14,30	PARCEL NO. 10 MORSE. ADD NEW DRIVE AT STA. 226+75 LT. PER C.O. 7865	01-19-90	A.S.J.	J.D.P.
44	11,33	PARCEL NO. 2Q. CHANGE BEGINING STA. TO 260+93 RT. & INCREASE SIZE OF TAKE FROM 2.27A± TO 2.71A± PER. CO. 7907	04-12-90	A.S.J.	J.D.P.
45	17,33	PARCEL NO. 19 GREENE. DECREASE THE SIZE OF 19B FROM 0.25A± TO 0.06A± 2614 S.F.± AND CHANGE ENDING STA. TO 261+63 RT. PER.CO. 7908	04-12-90	A.S.J.	J.D.P.
46	17,33	PARCEL NO. 20 MORSE. CHANGE SIZE FOR 20B FROM 0.28A± TO 0.10A± PER.CO. 7909	04-12-90	A.S.J.	J.D.P.
47	17,33	PARCEL NO. 21. CHANGE SIZE OF 21B FROM 0.20A± TO 0.13A± PER.CO. 7910	04-12-90	A.S.J.	J.D.P.
48	11,26	PARCEL NO. 3 HULTEN. ADD HULTEN, JOHN P. TO TITLE. PER CO. 7938	06-18-90	M.J.R.	J.D.P.
49	18,33	PARCEL NO. 24 KUHN. CHANGE TITLE TO FERRONE, LOUIS G. & JANICE ALLI. PER CO. 7941	06-27-90	C.C.P.	J.D.P.
50	16,33	PARCEL NO. 17 ZOBAL. MAKE THIS PARCEL A TOTAL TAKE- 1) ADD PARCEL #17C CONTAINING 0.92 A± 2) DELETE REMAINDER, SLOPE RIGHTS AND CONSTRUCTION EASEMENT. PER C.O. 7955	07-19-90	M.J.R.	W.J.M.
51	16,33	PARCEL NO. 17 ZOBAL. RESCIND C.O. #7955 AND PUT BACK ORIGINAL TAKING PER NECCESITY PETITION. PER C.O. 7968	08-07-90	C.C.P.	L.W.B.
52	30	PARCEL NO. 10 MORSE. ADD LANDSCAPING NOTES TO LAYOUT. PER C.O. 7973	09-14-90	M.J.R.	J.D.P.
53	18	PARCEL 27 GREEN MT. POWER. ADD PARCEL 27C TO REPRESENT LAND CONDEMNED IN WILMINGTON.	10-23-90	M.J.R.	L.W.B.
	20	PARCEL NO. 34 NEW ENGLAND TELEPHONE. CHANGE PARCEL 34 TO 34A. ADD 34B TO REPRESENT LAND CONDEMNED IN WILMINGTON. PER C.O. 7989.			
54	9,25	PARCEL NO. 2C NEW ENGLAND POWER CO. ADD EXCEPT & RESERVE (P) FOR TANNERY FOUNDATION AT STA. 146+70 ~ 148+00 RT. DELETE SLOPE AND CONST. EASE. RIGHTS IN THAT AREA. PER C.O. 8211.	04-06-92	C.C.P.	L.W.B.

ACCT. GFunk
\\vaot_cadd\filingcabinet$\78d096\RightOfWay\lind.dgn
DATE PLOTTED 10-JAN-2002

DR. (P)- DRAINAGE RIGHT
DIT. (P)- DITCHING RIGHT
CH. (P)- CHANNEL RT.
DRIVE (T)- DRIVE RIGHT
CUL. (P)- CULVERT RIGHT
[W]- WATER SOURCES

PRESENT R.O.W.
TAKING WITHOUT ACCESS
TAKING WITHOUT ACCESS ALONG PROPERTY LINE
TAKING WITH ACCESS
(P) PERMANENT EASEMENT
(T) TEMPORARY EASEMENT

LEGEND
C&T (P) CLEARING & TRIMMING
CZ (P) CLEAR ZONE
CONST. (T) CONSTRUCTION EASEMENT
SR SR SLOPE RIGHTS
P L PROPERTY LINE
TOP OF CUT
TOE OF SLOPE
UE (P) PERMANENT UTILITY EASEMENT

lind5.i

APPROVED: LAWRENCE W. BLISS DATE: 07-05-88
CHIEF, PLANS & TITLES

R.O.W. PLANS REVISED

SEARSBURG - WILMINGTON
F 010-1 (18)
SHEET 11A OF 36

JAN 25 2002

STATE OF VERMONT
AGENCY OF TRANSPORTATION
RIGHT OF WAY PLANS
DETAIL SHEET

TABLE OF PROJECT PROPERTY ACQUISITION

PARCEL NO.	GRANTOR	SHEET NO.	BEGINNING STATION	ENDING STATION	TAKING	REM.	RIGHTS	TITLE TAKEN	DATE	TOWN OR CITY RECORDED	BK.	PG.	REMARKS
5B	CONTINUED	27	174+80 RT.	181+20 RT.	0.28A±			WD		SEARSBURG			
5C		28	188+52 RT.	197+71 CL.	0.88A±								
5D		29	207+57 RT.	212+04 RT.	0.43A±			COND	08-27-90	WILMINGTON	129	499	
5E		26	163+70 LT.	169+43 RT.	0.55A±			WD		SEARSBURG			HWY. EASE. VT. RTE. 9
5F		27	174+82 RT.	181+20 RT.	0.51A±		ALL R.T. & I.						HWY. EASE. VT. RTE. 9
5G		28	188+48 RT.	197+73 LT.	0.52A±		ALL R.T. & I.						HWY. EASE. VT. RTE. 9
5H		29	207+55 RT.	212+04 RT.	0.37A±		ALL R.T. & I.	COND	08-27-90	WILMINGTON	129	499	HWY. EASE. VT. RTE. 9
6A	GREEN MOUNTAIN NATIONAL SERVICE U.S.D.A.	27	174+90 LT. 175+15 LT.	175+51 LT.	0.07A±			WD	11-13-89	SEARSBURG	13	143	3050 S.F.± 20' GRAVEL DRIVE MM 0503
6B		27	174+86 RT.	175+40 CL.	0.03A±		ALL R. T. & I.	WD		SEARSBURG			1150 S.F.± HWY. EASE.
7A	PENSON, RAYMOND	27	175+40 CL 178+35 LT.	181+18 LT.	0.62A±			COND	08-25-90	SEARSBURG	13	180	16' GRAVEL DRIVE MM 0509 1350 S.F.± 455 S.F.±
			179+00 LT. 179+25 LT. 175+51 LT.	181+18 LT. 181+18 LT. 181+18 LT.		9.03A±	CONST. EASE. (T) (0.04A±) SLOPE (P) (0.01A±)						
7B			175+36 RT.	181+19 RT.	0.35A±		ALL R. T. & I.						HWY. EASE. VT. RTE. 9

REVISION NO.	SHEET	DESCRIPTION OF REVISION	DATE	MADE BY	APPROVED BY
42	17, 33	PARCEL NO. 19 GREENE. ADJUST LOCATION OF LEACH FIELD. STA. 260+32 RT. ~ 260+70 RT. PER C.O. 7861	01-15-90	M. J. R.	J. D. P.
43	14, 30	PARCEL NO. 10 MORSE. ADD NEW DRIVE AT STA. 226+75 LT. PER C.O. 7865	01-19-90	A. S. J.	J. D. P.
44	11, 33	PARCEL NO. 2Q. CHANGE BEGINING STA. TO 260+93 RT. & INCREASE SIZE OF TAKE FROM 2.27A± TO 2.71A± PER. CO. 7907	04-12-90	A. S. J.	J. D. P.
45	17, 33	PARCEL NO. 19 GREENE. DECREASE THE SIZE OF 19B FROM 0.25A± TO 0.06A± 2614 S.F.± AND CHANGE ENDING STA. TO 261+63 RT. PER. CO. 7908	04-12-90	A. S. J.	J. D. P.
46	17, 33	PARCEL NO. 20 MORSE. CHANGE SIZE FOR 20B FROM 0.28A± TO 0.10A± PER. CO. 7909	04-12-90	A. S. J.	J. D. P.
47	17, 33	PARCEL NO. 21. CHANGE SIZE OF 21B FROM 0.20A± TO 0.13A± PER. CO. 7910	04-12-90	A. S. J.	J. D. P.
48	11, 26	PARCEL NO. 3 HULTEN. ADD HULTEN, JOHN P. TO TITLE. PER CO. 7938	06-18-90	M. J. R.	J. D. P.
49	18, 33	PARCEL NO. 24 KUHN. CHANGE TITLE TO FERRONE, LOUIS G. & JANICE ALLI. PER CO. 7941	06-27-90	C. C. P.	J. D. P.
50	16, 33	PARCEL NO. 17 ZOBAL. MAKE THIS PARCEL A TOTAL TAKE- 1) ADD PARCEL #17C CONTAINING 0.92 A± 2) DELETE REMAINDER, SLOPE RIGHTS AND CONSTRUCTION EASEMENT. PER C.O. 7955	07-19-90	M. J. R.	W. J. M.
51	16, 33	PARCEL NO. 17 ZOBAL. RESCIND C.O. #7955 AND PUT BACK ORIGINAL TAKING PER NECCESITY PETITION. PER C.O. 7968	08-07-90	C. C. P.	L. W. B.
52	30	PARCEL NO. 10 MORSE. ADD LANDSCAPING NOTES TO LAYOUT. PER C.O. 7973	09-14-90	M. J. R.	J. D. P.
53	18	PARCEL 27 GREEN MT. POWER. ADD PARCEL 27C TO REPRESENT LAND CONDEMNED IN WILMINGTON.	10-23-90	M. J. R.	L. W. B.
	20	PARCEL NO. 34 NEW ENGLAND TELEPHONE. CHANGE PARCEL 34 TO 34A. ADD 34B TO REPRESENT LAND CONDEMNED IN WILMINGTON. PER C.O. 7989.			
54	9, 25	PARCEL NO. 2C NEW ENGLAND POWER CO. ADD EXCEPT & RESERVE (P) FOR TANNERY FOUNDATION AT STA. 146+70 ~ 148+00 RT. DELETE SLOPE AND CONST. EASE. RIGHTS IN THAT AREA. PER C.O. 8211.	04-06-92	C. C. P.	L. W. B.

ACCT. RYAN
ZFH[70,70]78D096D.DGN
PRF: 78D096DS5.PRF
DATE PLOTTED 6-APR-1992

DR. (P)- DRAINAGE RIGHT
DIT. (P)- DITCHING RIGHT
CH. (P)- CHANNEL RT.
DRIVE (T)- DRIVE RIGHT
CUL. (P)- CULVERT RIGHT
[W]- WATER SOURCES

PRESENT R.O.W.
TAKING WITHOUT ACCESS
TAKING WITHOUT ACCESS ALONG PROPERTY LINE
TAKING WITH ACCESS
(P) PERMANENT EASEMENT
(T) TEMPORARY EASEMENT

LEGEND
CZ (P) CLEAR ZONE
CONST. (T) CONSTRUCTION EASEMENT
SR SR SLOPE RIGHTS
P L PROPERTY LINE
TOP OF CUT
TOE OF SLOPE

APPROVED: LAWRENCE W. BLISS DATE: 7-5-88
AGENT D, PLANS & TITLES

R. O. W. PLANS
SEARSBURG-WILMINGTON
F 010-1 (18)
SHEET 12 OF 36

DEC 12 2001 SHEET 34 OF 435

STATE OF VERMONT
AGENCY OF TRANSPORTATION
RIGHT OF WAY PLANS
DETAIL SHEET

TABLE OF PROJECT PROPERTY ACQUISITION

PARCEL NO.	GRANTOR	SHEET NO.	BEGINNING STATION	ENDING STATION	TAKING	REM.	RIGHTS	TITLE TAKEN	DATE	TOWN OR CITY RECORDED	BK.	PG.	REMARKS
8A	WILLIAM E. DAILEY, INC.	27, 28	181+18 LT. 181+18 LT. 181+18 LT. 183+40 LT. 184+25 LT. 184+30 LT. 184+42 LT. 185+40 LT. 187+00 LT. 187+20 LT. 181+18 LT.	188+45 RT. 184+05 LT. 182+80 LT. 184+60 LT. 188+40 LT. 188+30 LT. 188+40 LT.	0.42A± 9.32A±		CONST. EASE. (T) (0.05A±) SLOPE (P) (0.02A±) DRIVE (T) EASE. TO REMOVE (T) (0.01A±) DRIVE (T) CONST. EASE. (T) (0.03A±) SLOPE (P) (0.02A±)	COND	08-25-90	SEARSBURG	13	189	2400 S.F.± 750 S.F.± 24' PAVED MM 0519 SHED 450 S.F.± SCALE D-5 SHED D-6 30' GRAVEL MM 0522 1350 S.F.± 975 S.F.±
8B		27, 28	181+20 RT.	188+54 RT.	0.36A±								
8C		27, 28	181+18 LT.	188+52 RT.	1.27A±		ALL R. T. & I.						HWY. EASE. VT. RTE. 9
9A	TOWNE, DONALD M.	28	197+75 LT. 198+35 LT. 198+20 LT. 198+40 LT. 197+75 LT.	201+17 LT. 201+17 LT.	0.17A±	 4.76A±	DRIVE (T)	COND	08-25-90	SEARSBURG	13	189	12' GRAVEL MM 0547 WOOD GUIDE POST D-8 WOOD GUIDE POST D-8
9B		28	197+67 RT. 197+67 RT. 197+66 RT. 199+09 RT. 199+33 RT. 197+62 RT.	201+03 RT. 198+60 RT. 198+88 RT. 199+92 RT. 199+68 RT. 207+62 RT.	0.22A±	 1.06A±	SLOPE (T) (0.01A±) CONST. EASE. (T) (0.02A±) CONST. EASE. (T) (0.02A± SLOPE (T) (0.01A±)	WD		SEARSBURG			425 S.F.± 1020 S.F.± 660 S.F.± 136 S.F.±
9C		28, 29	201+10 LT. 203+00 LT. 206+00 LT. 206+40 LT. 201+17 LT.	207+46 RT. 206+80 LT. 206+65 LT. 206+80 LT. 206+80 LT.	1.00A±	 2.00A±	CONST. EASE. (T) (0.07A±) SLOPE (T) (175 S.F.±) DITCH (P)	COND	08-27-90	WILMINGTON	129	499	3000 S.F.±

REVISION NO.	SHEET	DESCRIPTION OF REVISION	DATE	MADE BY	APPROVED BY
55	13, 20 29	PARCEL NO. 9C TOWNE. CHANGE ENDING STA. FROM 206+46 15' RT. TO 207+46 15' RT. PARCEL NO. 31B DAVIE. CHANGE BEGINNING STA. FROM 206+46 15' RT. TO 207+46 15' RT. PER C. O. 8249	07-27-92	G. W. C.	L. W. B.
56	8, 11 23-26 29-33 35, 36	PARCEL NO. 2 NEW ENGLAND POWER COMPANY. REVISE PLANS AS SHOWN ON ATTACHED SHEETS PER C. O. 8427	08-31-93	M. J. R.	L. W. B
57	8, 22, 26 29-33 35, 36	PARCEL NO. 2 NEW ENGLAND POWER COMPANY. CHANGE NAME TO USGEN NEW ENGLAND, INC. PER C. O. 8996.	10-05-98	M. J. R.	L. W. B.
58	8, 9 10	PARCEL NO. 2 USGEN NEW ENGLAND, INC. ON PARCEL 2C: CHANGE CHANNEL RELOCATION FROM (P) TO (T) AND DELETE (P) FROM EXCEPT & RESERVE. ON PARCEL 2N: DELETE ENDING STATION ON CUL., DIT. & DR (P). PER C. O. 9042. MYLARS TO DESIGN 05-25-99 CONTRACT 1 SHEETS 8, 9, 22-26	04-13-99	R. M. W.	L. W. B.
59	9	PARCEL NO. 2 USGEN NEW ENGLAND, INC. PARCEL 2C - REMOVE SLOPE (P) AT STA. 152+35 RT. ~ 153+15 RT. CHANGE ENDING STA. OF SLOPE (P) AT STA. 148+35 RT. ~ 150+50 RT. TO: 148+35 RT. ~ 153+15 RT.; 0.09A±, 3922 S.F.±. PARCEL 2E - ADD DRIVE (T) AT BL 'A' 35+96 LT. ~ BL 'A' 37+55 LT. PER C. O. 9056.	06-17-99	M. J. R.	L. W. B.
60	20, 36A	PARCEL NO. 35. MYRIC MASON, LLC. CREATE NEW PARCEL CONSISTING OF PARCEL 35A; 8.94A± OF WETLANDS AND PARCEL 35B; 2.01A± OF ROW IN COMMON. PER C. O. 9060.	07-23-99	M. J. R.	L. W. B.
61	20, 36A	PARCEL NO. 36. MOUNT SNOW, LTD. ADD PARCEL NO. 36. ALL R. T. & I. IN PARCEL NO. 35A. TAKING OF 8.94A±. REMAINDER OF 213.32A±. PER C. O. 9075.	10-11-99	M. J. R.	L. W. B.

0101018 1805 78D096

ACCT.prop
C:\USERS\PROP\78D096\rd096d.dgn
DATE PLOTTED 11-OCT-1999
/78d096/rd096d6.i

DR. (P)- DRAINAGE RIGHT
DIT. (P)- DITCHING RIGHT
CH. (P)- CHANNEL RT.
DRIVE (T)- DRIVE RIGHT
CUL. (P)- CULVERT RIGHT
[W]- WATER SOURCES

PRESENT R.O.W.
TAKING WITHOUT ACCESS
TAKING WITHOUT ACCESS ALONG PROPERTY LINE
TAKING WITH ACCESS
(P) PERMANENT EASEMENT
(T) TEMPORARY EASEMENT

LEGEND
C&T (P) CLEARING & TRIMMING
CZ (P) CLEAR ZONE
CONST. (T) CONSTRUCTION EASEMENT
SR SR SLOPE RIGHTS
P L PROPERTY LINE
TOP OF CUT
TOE OF SLOPE

APPROVED: LAWRENCE W. BLISS DATE: 07-05-88
AGENT D. PLANS & TITLES

R. O. W. PLANS
SEARSBURG-WILMINGTON
F 010-1 (18)
SHEET 13 OF 36

DEC 12 2001 SHEET 35 OF 435

STATE OF VERMONT
AGENCY OF TRANSPORTATION
RIGHT OF WAY PLANS
DETAIL SHEET

TABLE OF PROJECT PROPERTY ACQUISITION

PARCEL NO.	GRANTOR	SHEET NO.	BEGINNING STATION	ENDING STATION	TAKING	REM.	RIGHTS	TITLE TAKEN	DATE	TOWN OR CITY RECORDED	BK.	PG.	REMARKS
9D	DELETED												
9E		28	197+71 CL 197+75 LT. 198+40 LT.	201+10 LT. 198+25 LT. 201+10 LT.	0.38A±		ALL R. T. & I. REMOVE & RESET (T) REMOVE & RESET (T)			SEARSBURG			HWY. EASE. VT. RTE. 9 WOODFENCE WOODFENCE
9F		28, 29	201+03 RT. 201+00 RT. 203+68 RT. 205+28 RT. 207+13 RT.	207+57 RT. 204+46 RT. 204+18 RT. 207+62 RT. 207+62 RT.	0.80A±		ALL R. T. & I. CONST. EASE. (T) (0.05A±) SLOPE (T) 0.01A± CONST. EASE. (T) (0.03A±) DIT. & DR. (P)	COND	08-27-90	WILMINGTON	129	499	HWY. EASE. VT. RTE. 9 2270 S.F. ± 192 S.F. ± 1365 S.F. ±
10A	MORSE, VIOLA B. NOW OWNED BY VIOLA B. MORSE, ANNETTE N. MORSE & DUDLEY D. WALDO	29, 30	211+28 LT. 210+85 LT. 210+77 LT. 218+50 LT. 218+50 LT. 218+85 LT. 222+00 LT. 222+50 LT. 222+63 LT. 223+55 LT. 225+00 LT. 225+00 LT. 225+00 LT. 225+75 LT. 226+75 LT. 215+35 LT. 221+75 LT. 219+00 LT. 218+50 LT.	223+64 LT. 221+00 LT. 220+50 LT. 219+25 LT. 219+65 LT. 223+05 LT. 223+73 LT. 224+95 LT. 226+86 LT. 225+50 LT. 257+70 LT. 222+95 LT. 225+00 LT. 225+00 LT.	0.54A±	362.8A±	SLOPE (P) (1.04A±) CONST. EASE. (T) (0.11A±) DITCH (P) DRIVE (T) CUL. (T) EASE. TO INSTALL (T) DITCH (P) CUL. (P) CONST. EASE. (T) (0.02A±) SLOPE (P) (0.02A±) DRIVE (T) DRIVE (T) INSTALL (T) LANDSCAPE (T) INSTALL & MAINTAIN	COND WD	08-27-90	WILMINGTON	129	499	25' GRAVEL MM 0033 STONE RETAINING WALL STONE RETAINING WALL UNDERDRAIN 1075 S.F. ± 800 S.F. ± 16' GRAVEL MM 0047 16' GRAVEL MM 0049 CELLAR DRAIN CONNECTION TREES & SHRUBS DRAINAGE SYSTEM BEHIND WALL
10B		32, 33	250+69 LT. 254+65 LT. 254+90 LT. 255+45 RT. 255+50 LT.	257+50 LT. 255+65 RT.	2.40A±			WD	09-06-90	WILMINGTON	129	606	STONE FIREPLACE D-15 BARN D-10 LEACH FIELD & SEPTIC TANK D-12 MOBILE HOME WITH DECK D-11
10C		29, 30	212+04 LT. 219+90 LT. 219+00 LT.	226+89 LT. 220+90 LT. 225+00 LT.	1.01A±		ALL R. T. & I. INSTALL & MAINTAIN (P)	COND WD	08-27-90	WILMINGTON	129	499	HWY. EASE. VT. RTE. 9 STONE RETAINING WALL CONCRETE RETAINING WALL

REVISION NO.	SHEET	DESCRIPTION OF REVISION	DATE	MADE BY	APPROVED BY

JAN 25 2002

ACCT. RYAN
ZF&ETO,II078D096D.DGN
PRF: 78D096DS7.PRF
DATE PLOTTED 22-JAN-1990

DR. (T)- DRAINAGE RIGHT
DIT. (T)- DITCHING RIGHT
CH. (T)- CHANNEL RT.
DRIVE (T)- DRIVE RIGHT
CUL. (T)- CULVERT RIGHT
[W]- WATER SOURCES

PRESENT R.O.W.
TAKING WITHOUT ACCESS
TAKING WITHOUT ACCESS ALONG PROPERTY LINE
TAKING WITH ACCESS
PERMANENT EASEMENT
TEMPORARY EASEMENT

LEGEND

CONSTRUCTION EASEMENT
SLOPE RIGHTS
PROPERTY LINE
TOP OF CUT
TOE OF SLOPE

APPROVED: LAWRENCE W. BLISS DATE: 7-5-88
AGENT D, PLANS & TITLES

R. O. W. PLANS

SEARSBURG-WILMINGTON
F 010-1 (18)
SHEET 14 OF 36

STATE OF VERMONT
AGENCY OF TRANSPORTATION
RIGHT OF WAY PLANS
DETAIL SHEET

TABLE OF PROJECT PROPERTY ACQUISITION

PARCEL NO.	GRANTOR	SHEET NO.	BEGINNING STATION	ENDING STATION	TAKING	REM.	RIGHTS	TITLE TAKEN	DATE	TOWN OR CITY RECORDED	BK.	PG.	REMARKS
10D	CONTINUED	32	250+19 CL	253+80 RT.	0.18A±		ALL R.T. & I.	WD	09-06-90	WILMINGTON	129	606	HWY. EASE. VT. RTE. 9
11A	BERGMAN, FREDERICK A. & LOIS A.	30, 31	227+63 LT. 228+15 LT. 228+25 LT. 236+62 LT. 226+86 LT.	237+51 LT. 235+80 LT. 235+45 LT. 239+00 LT.	1.50A±	44.29A±	CONST. EASE. (T) (0.18A±) SLOPE (P) (0.70A±) DRIVE (T)	WD	9-27-89	WILMINGTON	126	254	15' PAVED MM 0067
11B		30, 31	226+86 LT. 237+05 LT. 237+51 LT.	239+06 LT. 238+70 LT. 238+55 LT.	1.00A±		ALL R. T. & I. CONST. EASE. (T) (0.03A±) SLOPE (T) (0.01A±)	WD		WILMINGTON			HWY. EASE. VT. RTE. 9 1300 S.F. ± 200 S.F. ±
12	RAFUS, RAY T. & VIOLET	31, 32	239+00 LT. 239+29 LT.	241+21 LT.	0.15A±	0.95A±	ALL R. T. & I.	WD	01-18-90	WILMINGTON	127	513	HWY. EASE. VT. RTE. 9 16' GRAVEL DRIVE MM 0072
13	BROOKS, FRANK W. & ELAINE M.	32	241+20 LT. 241+35 LT. 241+21 LT.	242+48 LT. 242+48 LT.	0.01A±	1.37A±	ALL R. T. & I.	WD	12-12-89	WILMINGTON	127	253	HWY. EASE. VT. RTE. 9 12' GRAVEL DRIVE MM 0076
14A	DOUGHERTY, MARY BETH	32	243+22 LT. 243+91 LT. 242+75 LT.	243+97 LT. 243+75 LT.	0.01A±		REMOVE & RESET (T)	COND	08-27-90	WILMINGTON	129	499	481 S.F. ± 12' GRAVEL DRIVE MM 0081 PICKET FENCE
14B		32	242+48 LT. 242+48 LT.	243+99 LT. 243+96 LT.	0.09A±	1.24A±	ALL R. T. & I.	COND	08-27-90	WILMINGTON	129	499	4131 S.F. ± HWY. EASE. VT. RTE. 9

REVISION NO.	SHEET	DESCRIPTION OF REVISION	DATE	MADE BY	APPROVED BY

DR. RT.- DRAINAGE RIGHT
DIT. RT.- DITCHING RIGHT
CH. RT.- CHANNEL RT.
DRIVE RT.- DRIVE RIGHT
CUL. RT.- CULVERT RIGHT
(D)- DEMOLITION OR REMOVAL
(W)- WATER SOURCES

PROP. ADMIN. 5-87

PRESENT R.O.W.
TAKING WITHOUT ACCESS
TAKING WITHOUT ACCESS ALONG PROPERTY LINE
TAKING WITH ACCESS
(P) PERMANENT EASEMENT
(T) TEMPORARY EASEMENT

LEGEND

CONST. EASE. — CONSTRUCTION EASEMENT
SR SR — SLOPE RIGHTS
P L — PROPERTY LINE
TOP OF CUT
TOE OF SLOPE

APPROVED: LAWRENCE W. BLISS DATE: 7-5-88
AGENT D, PLANS & TITLES

R. O. W. PLANS

SEARSBURG-WILMINGTON
F 010-1 (18)
SHEET 15 OF 36

DEC 12 2001

STATE OF VERMONT
AGENCY OF TRANSPORTATION
RIGHT OF WAY PLANS
DETAIL SHEET

TABLE OF PROJECT PROPERTY ACQUISITION

PARCEL NO.	GRANTOR	SHEET NO.	BEGINNING STATION	ENDING STATION	TAKING	REM.	RIGHTS	TITLE TAKEN	DATE	TOWN OR CITY RECORDED	BK.	PG.	REMARKS
15A	SZAREJKO, JOSEPH M. & BRENDA I.	32	243+96 LT. 244+85 LT. 244+86 LT.	245+06 LT. 245+07 LT.	0.05A±	1.44A±	CONST. EASE. (T) (80 S.F.±)	COND	08-27-90	WILMINGTON	129	499	2256 S.F.± 12' GRAVEL DRIVE MM 0083
15B		32	243+97 LT.	244+97 LT.	0.05A±		ALL R. T. & I.	COND	08-27-90	WILMINGTON	129	499	2230 S.F.± HWY. EASE. VT. RTE. 9
16A	BEAUDRY, CLEMENT L. & SUSIE M.	32	244+97 LT. 245+06 LT. 245+06 LT. 246+00 LT.	247+02 LT. 246+85 LT. 247+02 LT.	0.16A±	1.75A±	CONST. EASE. (T) (0.02A±) DRIVE (T)	WD	01-23-90	WILMINGTON	127	537	1850 S.F.± 16' GRAVEL MM 0085
16B		32	244+91 RT.	246+96 LT.	0.10A±		ALL R.T. & I.	WD		WILMINGTON			HWY. EASE. VT. RTE. 9
17A	ZOBAL, ZDENEK	32, 33	253+80 RT. 255+15 RT. 255+40 RT. 256+10 RT. 255+15 RT.	255+64 RT. 255+62 RT. 257+20 RT. 257+15 RT. 256+76 RT.	0.40A±	0.92A±	SLOPE (P) (0.06A±) CONST. EASE. (T) (0.06A±) SLOPE (P) (0.07A±)	COND	08-27-90	WILMINGTON	129	499	2800 S.F.± 2700 S.F.± 2832 S.F.±
17B		32, 33	253+70 RT.	255+50 RT.	0.18A±		ALL R. T. & I.	COND	08-27-90	WILMINGTON	129	499	HWY. EASE. VT. RTE. 9
18	JONES, ALBERT H. & HELEN M.	33	256+43 RT. 257+80 LT. 257+90 LT. 257+95 LT.	258+57 LT. 258+53 LT.	0.50A±			COND	08-27-90	WILMINGTON	129	499	CAMP D-13 WATERLINE W 12A SEPTIC TANK D-14

REVISION NO.	SHEET	DESCRIPTION OF REVISION	DATE	MADE BY	APPROVED BY

ACCT. RYAN
ZFile70,li178D096D.DGN
PRF: 78D096DS9.PRF
DATE PLOTTED 7-AUG-1990

DR. (T)- DRAINAGE RIGHT
DIT. (T)- DITCHING RIGHT
CH. (T)- CHANNEL RT.
DRIVE (T)- DRIVE RIGHT
CUL. (T)- CULVERT RIGHT
[W]- WATER SOURCES

PRESENT R.O.W.
TAKING WITHOUT ACCESS
TAKING WITHOUT ACCESS ALONG PROPERTY LINE
TAKING WITH ACCESS
(P) PERMANENT EASEMENT
(T) TEMPORARY EASEMENT

LEGEND
CONST. (T) CONSTRUCTION EASEMENT
SR SR SLOPE RIGHTS
P L PROPERTY LINE
TOP OF CUT
TOE OF SLOPE

APPROVED: LAWRENCE W. BLISS DATE: 7-5-88
AGENT D, PLANS & TITLES

R. O. W. PLANS
SEARSBURG-WILMINGTON
F 010-1 (18)
SHEET 16 OF 36

STATE OF VERMONT
AGENCY OF TRANSPORTATION
RIGHT OF WAY PLANS
DETAIL SHEET

TABLE OF PROJECT PROPERTY ACQUISITION

PARCEL NO.	GRANTOR	SHEET NO.	BEGINNING STATION	ENDING STATION	TAKING	REM.	RIGHTS	TITLE TAKEN	DATE	TOWN OR CITY RECORDED	BK.	PG.	REMARKS
19A	GREENE, BERT CYRIL	33	257+05 RT. 256+76 RT. 257+15 RT. 259+88 RT. 260+02 RT. 260+32 RT. 256+76 RT.	261+45 LT. 259+05 LT. 259+95 RT. 260+10 RT. 260+70 RT. 260+68 RT.	1.20A±	1.36A±	SLOPE (P) (0.22A±) CONST. EASE. (T) (0.05A±) INSTALL (T)	COND	08-27-90	WILMINGTON	129	499	2000 S.F.± CELLAR DRAIN SPRING W-13 LEACH FIELD
19B		33	206+68 RT.	261+63 RT.	0.06 A±		ALL R. T. & I.	COND	08-27-90	WILMINGTON	129	499	HWY. EASE. VT. RTE. 9 2614 S.F.±
20A	MORSE, KENDALL H.	33	261+10 LT. 262+20 LT. 262+28 LT. 262+34 LT. 262+80 LT.	262+98 LT. 262+98 LT. 262+98 LT. 262+63 LT.	0.20A±	9.80	CONST. EASE. (T) (0.02A±) SLOPE (P) (0.01A±) CUL. (T) DRIVE (T)	COND	08-27-90	WILMINGTON	129	499	750 S.F.± 300 S.F.± 20' GRAVEL MM 0117
20B		33	261+45 LT.	262+97 LT.	0,10 A±		ALL R. T. & I.	WD	08-28-90	WILMINGTON	129	522	HWY. EASE. VT. RTE. 9
21A	JOYCE, RICHARD M.	33	262+97 LT. 262+98 LT. 262+98 LT. 263+35 LT. 263+24 LT. 263+40 LT. 264+00 LT. 265+15 LT. 262+98 LT.	265+13 LT. 264+00 LT. 263+12 LT. 263+50 LT. 265+64 LT. 265+66 LT. 265+13 LT.	0.07A±	5.05A±	CONST. EASE. (T) (0.02A±) SLOPE (P) (120 S.F.±) SLOPE (P) (25 S.F.±) DRIVE (T) REMOVE & RESET (T) SLOPE (P) (0.05A±) CONST. EASE. (T) (0.01A±)	COND.	08-27-90	WILMINGTON	129	499	3000 S.F.± 750 S.F.± 24' GRAVEL MM 0118 SIGN (PERSONAL PROPERTY) 2100 S.F.± 430 S.F.±
21B		33	262+94 RT.	265+11 LT.	0.13 A±		ALL R. T. & I.	COND	08-27-90	WILMINGTON	129	499	HWY. EASE. VT. RTE. 9
22A	HRNCIAR, WILLIAM T. & SANDRA	33	265+11 LT. 265+13 LT. 265+64 LT. 265+13 LT.	266+37 LT. 266+64 LT. 266+67 LT. 266+64 LT.	0.04A±	1.34A±	SLOPE (P) (0.03A±) CONST. EASE. (T) (0.02A±)			WILMINGTON			1600 S.F.± 1425 S.F.± 970 S.F.±
22B		33	265+02 RT.	266+64 LT.	0.11A±		ALL R.T. & I.	COND	08-27-90	WILMINGTON	129	499	HWY. EASE. VT. RTE. 9

REVISION NO.	SHEET	DESCRIPTION OF REVISION	DATE	MADE BY	APPROVED BY

ACCT. RYAN
ZFILE70,II178D096D.DGN
PRF: 78D096D10
DATE PLOTTED 12-JAN-1990

DR. (T)- DRAINAGE RIGHT
DIT. (T)- DITCHING RIGHT
CH. (T)- CHANNEL RT.
DRIVE (T)- DRIVE RIGHT
CUL. (T)- CULVERT RIGHT
[W]- WATER SOURCES

PRESENT R.O.W.
TAKING WITHOUT ACCESS
TAKING WITHOUT ACCESS ALONG PROPERTY LINE
TAKING WITH ACCESS
(P) PERMANENT EASEMENT
(T) TEMPORARY EASEMENT

LEGEND
CONST. (T) CONSTRUCTION EASEMENT
SR SR SLOPE RIGHTS
PROPERTY LINE
TOP OF CUT
TOE OF SLOPE

APPROVED: LAWRENCE W. BLISS DATE: 7-5-88
AGENT D, PLANS & TITLES

R. O. W. PLANS
SEARSBURG-WILMINGTON
F 010-1 (18)
SHEET 17 OF 36

DEC 12 2001 SHEET 39 OF 435

STATE OF VERMONT
AGENCY OF TRANSPORTATION
RIGHT OF WAY PLANS
DETAIL SHEET

TABLE OF PROJECT PROPERTY ACQUISITION

PARCEL NO.	GRANTOR	SHEET NO.	BEGINNING STATION	ENDING STATION	TAKING	REM.	RIGHTS	TITLE TAKEN	DATE	TOWN OR CITY RECORDED	BK.	PG.	REMARKS
23	NOT USED												
24	FERRONE, LOUIS G. & JANICE ALLI-	33	266+52 CL 266+64 LT. 268+75 LT.	268+55 LT. 268+55 LT.	0.22A±	0.49A±	ALL R. T. & I.	COND	08-27-90	WILMINGTON	129	499	HWY. EASE. VT. RTE. 9 12' GRAVEL DRIVE MM 0128
25	KLIMAS, GUSTAV & GLORIA V.	33, 35	268+43 LT. 270+40 LT. 270+85 LT. 271+60 LT. 272+18 LT. 272+30 LT. 273+36 LT. 272+70 LT. 274+12 LT. 274+30 LT. 274+87 LT. 271+60 LT.	274+87 LT. 271+15 LT. 271+07 LT. 272+47 LT. 273+27 LT. 274+96 LT. 274+90 LT. 274+96 LT.	0.45A±		ALL R.T. & I. CONST. EASE. (T) (0.01A±) SLOPE (T) (70 S.F.±) DITCH (P) CONST. EASE. (T) (0.02A±) SLOPE (P) (0.03A±)	WD	12-01-89	WILMINGTON	127	137	HWY. EASE. VT. RTE. 9 600 S.F.± EXCEPT & RESERVE (GARAGE) EXCEPT & RESERVE (SEPTIC SYSTEM) 16' GRAVEL DRIVE MM 0137 EXCEPT & RESERVE (CONE/STONE RETAINING WALL) 900 S.F.± 1200 S.F.± STONE WALL 20' GRAVEL DRIVE MM 0134
26	HOMEOWNERS ASSOCATION OF CHIMNEY POINT INC.	35, 36	274+82 LT. 274+87 LT. 274+92 LT. 274+95 LT. 280+50 LT. 282+00 LT. 284+10 LT. 274+92 LT.	289+93 LT. 274+96 LT. 279+40 LT. 289+93 LT. 281+50 LT. 283+00 LT. 289+93 LT. 289+93 LT.	1.40A±		ALL R. T. & I. SLOPE (P) (0.50A±) CONST. EASE. (T) (0.35A±) SLOPE (T) (0.01A±) SLOPE (P) (0.02A±) SLOPE (P) (0.45A±)	WD	01-15-90	WILMINGTON	127	493	HWY. EASE. VT. RTE. 9 STONE WALL 200 S.F.± 1000 S.F.±
27A	GREEN MOUNTAIN POWER CORP.	36	289+93 LT. 289+93 LT. 289+93 LT. 290+50 LT.	291+43 LT. 291+12 LT. 291+43 LT.	0.13A±	0.69A±	ALL R. T. & I. SLOPE (P) (0.01A±) CONST. EASE. (T) (0.03A±) DRIVE (T)	WD	03-07-90	WILMINGTON	128	90	HWY. EASE. VT. RTE. 9 330 S.F.± 1400 S.F.± 24' GRAVEL MM 0169
27B								COND	08-25-90	SEARSBURG	13	189	UTILITY
27C								COND	08-27-90	WILMINGTON	129	499	UTILITY

REVISION NO.	SHEET	DESCRIPTION OF REVISION	DATE	MADE BY	APPROVED BY

JAN 25 2012

ACCT. RYAN
ZFWE70,W378D096D.DGN
PRF: 78D096DSII
DATE PLOTTED 23-OCT-1990

DR. (T)- DRAINAGE RIGHT
DIT. (T)- DITCHING RIGHT
CH. (T)- CHANNEL RT.
DRIVE (T)- DRIVE RIGHT
CUL. (T)- CULVERT RIGHT
[W]- WATER SOURCES

PRESENT R.O.W.
TAKING WITHOUT ACCESS
TAKING WITHOUT ACCESS ALONG PROPERTY LINE
TAKING WITH ACCESS
PERMANENT EASEMENT
TEMPORARY EASEMENT

LEGEND

CONSTRUCTION EASEMENT
SLOPE RIGHTS
PROPERTY LINE
TOP OF CUT
TOE OF SLOPE

APPROVED: LAWRENCE W. BLISS DATE: 7-5-88
AGENT D, PLANS & TITLES

R. O. W. PLANS

SEARSBURG-WILMINGTON
F 010-1 (18)
SHEET 18 OF 36

TABLE OF PROJECT PROPERTY ACQUISITION

STATE OF VERMONT
AGENCY OF TRANSPORTATION
RIGHT OF WAY PLANS
DETAIL SHEET

PARCEL NO.	GRANTOR	SHEET NO.	BEGINNING STATION	ENDING STATION	TAKING	REM.	RIGHTS	TITLE TAKEN	DATE	TOWN OR CITY RECORDED	BK.	PG.	REMARKS
28A	SEARSBURG SCHOOL DISTRICT 3	22	106+37 RT.	106+95 RT.	0.06A±			COND.	08-25-90	SEARSBURG	13	189	2500 S.F. ±
28B		22	106+34 LT.	106+87 RT.	0.03A±		ALL R. T. & I.						HWY. EASE. VT. RTE. 9 1250 S.F. ±
29A	CEDERGREN, JAMES W. & KAREN L. NOW OWNED BY GARY R. & KAREN E. AUSTIN	32, 33	246+96 LT. 248+55 LT.	254+30 LT.	0.70A±		DRIVE (T)	COND	08-27-90	WILMINGTON	129	499	40' PAVED MM 0090
29B		32	246+91 LT.	250+69 LT.	0.18A±		ALL R. T. & I.	COND	08-27-90	WILMINGTON	129	499	HWY. EASE. VT. RTE. 9
30A	BRESCIA, ANTHONY M.	28	188+40 LT. 188+40 LT. 188+85 LT. 190+50 LT. 192+45 LT. 194+12 LT. 194+33 LT. 195+42 LT.	197+75 LT. 190+38 LT. 190+15 LT. 190+80 LT. 194+82 LT. 194+67 LT.	1.12A±		CONST. EASE. (T) (0.04A±) SLOPE (P) (0.02A±) DRIVE (T) CONST. EASE. (T) (0.01A±) SLOPE (T) (150 S.F. ±) DRIVE (T)	COND.	08-25-90	SEARSBURG	13	189	1600 S.F. ± 690 S.F. ± 6 CONCRETE FOOTERS D-7 12' GRAVEL MM 0536 550 S.F. ± 16' GRAVEL MM 0541
30B	DELETED												
30C		28	188+45 RT.	197+75 LT.	0.60A±		ALL R. T. & I.			SEARSBURG			HWY. EASE. VT. RTE. 9
30D	DELETED												

REVISION NO.	SHEET	DESCRIPTION OF REVISION	DATE	MADE BY	APPROVED BY

JAN 25 20[illegible]

DR. RT.- DRAINAGE RIGHT
DIT. RT.- DITCHING RIGHT
CH. RT.- CHANNEL RT.
DRIVE RT.- DRIVE RIGHT
CUL. RT.- CULVERT RIGHT
(D)- DEMOLITION OR REMOVAL
[W]- WATER SOURCES

PRESENT R.O.W.
TAKING WITHOUT ACCESS
TAKING WITHOUT ACCESS ALONG PROPERTY LINE
TAKING WITH ACCESS
(P) PERMANENT EASEMENT
(T) TEMPORARY EASEMENT

LEGEND

CONST. EASE.
SR SR
P
L
CONSTRUCTION EASEMENT
SLOPE RIGHTS
PROPERTY LINE
TOP OF CUT
TOE OF SLOPE

APPROVED: LAWRENCE W. BLISS DATE: 7-5-88
AGENT D, PLANS & TITLES

PMS. NO. 780096

R. O. W. PLANS

SEARSBURG-WILMINGTON
F 010-1 (18)
SHEET 19 OF 36

PROP. ADMIN. 5-87

STATE OF VERMONT
AGENCY OF TRANSPORTATION
RIGHT OF WAY PLANS
DETAIL SHEET

TABLE OF PROJECT PROPERTY ACQUISITION

PARCEL NO.	GRANTOR	SHEET NO.	BEGINNING STATION	ENDING STATION	TAKING	REM.	RIGHTS			TITLE TAKEN	DATE	TOWN OR CITY RECORDED	BK.	PG.	REMARKS
31A	DAVIE, KENNETH DAVIE, WILLIAM B.	29	206+80 LT. 206+40 LT. 206+35 LT. 209+75 LT. 211+00 LT. 206+80 LT.	212+04 LT. 206+86 LT. 209+65 LT. 209+88 LT. 211+92 LT.	0.43A±	22.05A±	DITCH CONST. DITCH DRIVE	(P) (T) (P) (T)	0.15A±	WD	02-22-90	WILMINGTON	128	34	 1500 S.F. ± 12' GRAVEL MM 0019
31B		29	207+46 RT.	212+04 RT.	0.27A±		ALL R. T. & I.					WILMINGTON			HWY. EASE. VT. RTE. 9
32	MOORE, JOHN L. & FLORENCE	33	258+65 LT.				DRIVE	(T)		AGREE.		WILMINGTON			12' GRAVEL MM 0109
33	TOWN OF WILMINGTON	29-30	216+87 RT.	217+87 RT.			CONST.	(T)							TH 31 APPROACH
34A	NEW ENGLAND TELEPHONE & TELEGRAPH									COND.	08-25-90	SEARSBURG	13	189	UTILITY
34B										COND.	08-27-90	WILMINGTON	129	499	UTILITY
35A	MYRICK MASON, LLC	36A			8.94A±	213.32A±									
35B		36A					ROW IN COMMON		2.01A±						
36	MOUNT SNOW, LTD.	36A					ALL R.T. & I.								IN PARCELS 35A & 35B

REVISION NO.	SHEET	DESCRIPTION OF REVISION	DATE	MADE BY	APPROVED BY

0101018 1805 78D096

ACCT.prop
/prop/78d096/rd096d.dgn
DATE PLOTTED 15-OCT-1999
dl3.1

DR.(P)- DRAINAGE RIGHT
DIT.(P)- DITCHING RIGHT
CH.(P)- CHANNEL RT.
DRIVE (T)- DRIVE RIGHT
CUL.(P)- CULVERT RIGHT
[W]- WATER SOURCES

PRESENT R.O.W.
TAKING WITHOUT ACCESS
TAKING WITHOUT ACCESS ALONG PROPERTY LINE
TAKING WITH ACCESS
(P) PERMANENT EASEMENT
(T) TEMPORARY EASEMENT

LEGEND
C&T (P) CLEARING & TRIMMING
CZ (P) CLEAR ZONE
CONST.(T) CONSTRUCTION EASEMENT
SR SR SLOPE RIGHTS
P PROPERTY LINE
L
TOP OF CUT
TOE OF SLOPE

OCT 19 1999

APPROVED: LAWRENCE W. BLISS DATE: 07-05-88
AGENT D. PLANS & TITLES

R. O. W. PLANS

SEARSBURG-WILMINGTON
F 010-1 (18)
SHEET 20 OF 36

DEC 12 2001 SHEET 420 OF 435

STATE OF VERMONT
AGENCY OF TRANSPORTATION
RIGHT OF WAY PLANS
DETAIL SHEET

TABLE OF PROJECT PROPERTY ACQUISITION

PARCEL NO.	GRANTOR	SHEET NO.	BEGINNING STATION	ENDING STATION	TAKING	REM.	RIGHTS	TITLE TAKEN	DATE	TOWN OR CITY RECORDED	BK.	PG.	REMARKS
	RELINQUISHMENT NO. 1	23A, 24	W. CONN. 20+50.8 CL	REV. 128+02.9 LT.									INCLUDES PARCELS 2E, 2F, 2G AND 2H
	RELINQUISHMENT NO. 2	33	255+25 RT.	261+02 RT.									
	MAINT. AGREEMENT NO. 1	24	W. CONN. 20+12 CL	W. CONN. 20+50.8 CL									
	MAINT. AGREEMENT NO. 2	30	TH #31 20+12 CL	TH #31 20+35 CL									
	MAINT. AGREEMENT NO. 3	33	254+50 RT.	255+25 RT.									
	MAINT. AGREEMENT NO. 4	33	261+02 RT.	261+50 RT.									

REVISION NO.	SHEET	DESCRIPTION OF REVISION	DATE	MADE BY	APPROVED BY

ACCT. TFrench
\\vaot_cadd\filingcabinet#\78D096\RightOfWay\llnd.dgn
DATE PLOTTED 23-JUL-2001

DR. (P)- DRAINAGE RIGHT
DIT. (P)- DITCHING RIGHT
CH. (P)- CHANNEL RT.
DRIVE (T)- DRIVE RIGHT
CUL. (P)- CULVERT RIGHT
[W]- WATER SOURCES

PRESENT R.O.W.
TAKING WITHOUT ACCESS
TAKING WITHOUT ACCESS ALONG PROPERTY LINE
TAKING WITH ACCESS
(P) PERMANENT EASEMENT
(T) TEMPORARY EASEMENT

LEGEND
C&T (P) CLEARING & TRIMMING
CZ (P) CLEAR ZONE
CONST. (T) CONSTRUCTION EASEMENT
SR SR SLOPE RIGHTS
P L PROPERTY LINE
TOP OF CUT
TOE OF SLOPE
UE (P) PERMANENT UTILITY EASEMENT

APPROVED: LAWRENCE W. BLISS DATE: 07-05-88
CHIEF, PLANS & TITLES

R. O. W. PLANS REVISED

SEARSBURG - WILMINGTON
F 010-1 (18)
SHEET 21 OF 36

SEP 21 2001

CABLE GUARD RAIL
96+50 LT - 110+00 LT
TERMINATE AT 110+00 BY BURYING IT IN BERM.

REMOVAL AND DISPOSAL OF GUARD RAIL
105+64 LT - 107+94 LT
108+90 LT - 109+77 LT

CONSTRUCT DRIVE
98+94 RT (PAVED)

RELOCATE MAILBOX, SINGLE SUPPORT
98+89 LT - 99+00 LT

LANDSCAPING ITEMS FOR MR. ZUCKER'S PROPERTY
(PLANTING LOCATION TO BE DETERMINED BY PROPERTY OWNER AND RESIDENT ENGINEER)
ONE 1½'' CORTLAND APPLE TREE (SEMI-DWARF)
ONE 1½'' MCINTOSH APPLE TREE (SEMI-DWARF)
ONE 7 GAL. LIBERTY APPLE TREE (SEMI-DWARF)
ONE 7 GAL. RED DELICIOUS APPLE TREE (SEMI-DWARF)
ONE 4 IN 1 APPLE TREE (SEMI-DWARF)
(CORTLAND, LODI, MCINTOSH AND SUMMER RED)
FOUR 6-7' PICEA GLAUCA (EVERGREEN TREES)

EXISTING CURVE DATA
Δ = 13°-05' RT
D = 1°
R = 5729.58'
T = 657.02'
L = 1308.33'
E = 37.55'
BANK: 0.021 FT./FT.

N MAGNETIC

BEGIN R.O.W. PROJECT STA. 98+27 60'LT.

ML STA. 96+50
BEGIN PROJECT
NHF 010-1(18)

POST 96+00

DIT.,DR.(P)
CONST(T)

STA. 98+43 LT.-98+70 RT., NEW 18'' X 84'' PCCSP (.060) CAAP (.064) CLASS III W/STONE FILL, TYPE I, AT OUTLET

STA. 102+96 C.L. EXIST. 30'' RCP REPLACE WITH NEW 30'' X 72'' PCCSP (.079) CAAP (.075) CLASS III W/DITCH CHECK RT. & STONE FILL, TYPE II, AT OUTLET

STA. 105+52 C.L. EXIST. 18'' X 92'' PCCSP (.060) CAAP (.064) CLASS III W/STONE FILL, TYPE I, AT OUTLET

STA. 107+75 C.L. EXIST. 15'' RCP (LT OF C/L) REPLACE WITH NEW 30'' X 84'' PCCSP (.079) CAAP (.075) CREP (SL) W/DITCH CHECK RT & STONE FILL, TYPE II, AT OUTLET

PI 107+50.49 = 107+48.20

TO R.O.W. SHEET 23 OF 36

USGEN NEW ENGLAND, INC. JOINED BY VERMONT LAND TRUST INC.

RICE, MARJORIE

SEARSBURG SCHOOL DISTRICT NO. 3

1½ STY HOUSE

BM #1
R.R.S. 18" PINE
U.S. ELEV. 1668.77'

BM #2
R.R.S. 12" MAPLE
ELEV. 1658.51'

STA. 98+41 C.L. EXIST. 15'' RCP REMOVE

RIGHTS AS FILED WITH ORIGINAL PROJECT VOL. 13 PG. 122 SEP. 26, 1989

EXISTING DITCH IS TO BE CLEANED TO THE EXTENT DETERMINED BY THE PROPERTY OWNER AND THE RESIDENT ENGINEER. PAYMENT SHALL BE UNDER ALL PURPOSE EXCAVATOR RENTAL, TYPE I, ITEM 608.25.

STA. 102+50 RT.-102+90 RT., NEW 30'' X 44'' PCCSP (.075) CREP OR RCP, CLASS III W/STONE FILL, TYPE II, AT INLET

STA. 106+00 RT REMOVE EXIST. CATCH BASIN

CURVE DATA
Δ = 12°-11'-02.5'' RT
D = 2°
R = 2864.79'
T = 305.75'
L = 609.20'
E = 16.27'
BANK: 0.038 FT./FT.

MATCH LINE SURV. STA. 110+00

6'' UNDERDRAIN
① 97+00 RT-102+90 RT
NEW 6'' X 590' UNDERDRAIN
W/FB @ 97+00 RT & 99+50 RT

② 103+00 RT-105+52 RT
NEW 6'' X 252' UNDERDRAIN
W/FB @ 103+00 RT

③ 105+54 RT-107+75 RT
NEW 6'' X 221' UNDERDRAIN
W/FB @ 105+54 RT

④ 107+77 RT-110+20 RT
NEW 6'' X 221' UNDERDRAIN
W/FB @ 107+77 RT

LINES SHOWN ON THIS PLAN AS EXISTING PROPERTY LINES (P/L) ARE BELIEVED TO BE ACCURATE BUT SHOULD NOT BE RELIED UPON FOR PURPOSES UNRELATED TO THE STATE OF VERMONT'S ACQUISITION OF LAND AND RIGHTS FOR THIS PROJECT.

NOTE: PROPOSED CENTERLINE FROM 96+50 TO 100+15.5 SHALL FOLLOW THE CENTERLINE OF THE EXISTING PAVEMENT.

0 50 100
SCALE IN FEET

FOR R.O.W. USE ONLY

REVISED

PROJECT NAME: SEARSBURG - WILMINGTON
PROJECT NUMBER: NHF 010-1(18)

PLOT FILE NAME: DD096L01
PLOT DATE: 06-JUN-2001
PROJECT LEADER: DELLA SANTA
DRAWN BY: SQUAD B
DESIGN FILE: 78D096/DESIGN/DD096CNUI.DGN

R. O. W. SHEET 22 OF 36

SEP 21 2001

CONSTRUCT DRIVE
110+47 RT (GRAVEL)

TREATED TIMBER CURB
REV. 113+00 LT-REV. 118+61 LT.
REV. 121+09 LT-REV. 124+83 LT.
REV. 124+50 RT-REV. 125+00 RT.

STEEL BEAM GUARD RAIL
110+75 LT - 117+71.44 LT
BURY THE BEGINNING IN BERM (NO TERMINAL)
121+24 LT - 125+00 LT
113+50 RT - 118+53.00 RT
122+06.20 RT - 125+00 RT

MANUFACTURED TERMINAL SECTION (FLARED)
113+12.5 RT - 113+50 RT

GUARD RAIL APPROACH SECTION, NETC 2 RAIL (MOD.)
117+71.44 LT - 117+96.44 LT
120+99.00 LT - 121+24.00 LT
118+53.00 RT - 118+78.00 RT
121+81.20 RT - 122+06.20 RT

BRIDGE RAIL-NETC 2 RAIL
117+96.44 LT - 120+99.00 LT
118+78.00 RT - 121+81.20 RT

CURVE DATA
Δ= 41°-45'-47.87'' LT
D = 4°-30'
R = 1273.24'
T = 485.74'
L = 928.07'
E = 89.51'
BANK: 0.067 FT./FT.

REMOVAL & DISPOSAL OF GUARD RAIL
110+90 LT - 115+85 LT
115+36 RT - 115+88 RT
116+13 LT - 118+29 LT
116+16 RT - 118+44 LT
120+12 LT - 124+07 LT

N MAGNETIC

USGEN NEW ENGLAND, INC. JOINED BY VERMONT LAND TRUST INC.

ML REV. POC 116+23.79
END BRIDGE 24
RESUME ROADWAY

ML REV. POC 118+61.38
STOP ROADWAY
BEGIN BRIDGE 25

ML REV. POC 121+08.47
END BRIDGE 25
RESUME ROADWAY

ML REV. POC 115+86.91
STOP ROADWAY
BEGIN BRIDGE 24

TO R.O.W. SHEET 22 OF 36

TO R.O.W. SHEET 23A OF 36

REV. STA. 125+00 MATCH LINE

MATCH LINE
SURV. STA. 110+00

SURV. PT 110+53.95 BK
REV. POT 110+54.92 AHD
EQ. = -0.97'

REV. PI 118+47.54 =
118+04.14

BM # P-14
U.S.G.S. DISK
ELEV. 1638.21'

PREVIOUS ALIGNMENT

DEERFIELD RIVER

BOND BROOK

WOODS DRIVE

GRAVEL DRIVE

EXISTING VT. RTE. 9

EXISTING RT. 9 R.O.W.

BRIDGE

BR. 24

BR. 25

FOUNDATION

TEL. NO. POLE

WOODS

BRUSH

LEDGE

STONE WALL

GUARD RAIL

WARNING SIGN

CONC. POLE

DRIVE

REMOVE(T) (STONE WALL)

CONST (T)

CONST(T)

REMOVE

REMOVE(T)

REV. STA. 121+24 LT - 123+00 LT
NEW 18" X 172' PCCSP (.064), CAAP (.060) CPEP OR RCP, CL. III
4'X6' D.I. W/2 GRATES

REV. PT

N/F LIND

REV. 124+81 C.L.
EXIST. 18" RCP
REPLACE WITH NEW 18" CAAP (.064), PCCSP (.060) CPEP OR RCP
CL. III, W/STONE FILL, TYPE I, AT OUTLET

REV. STA. 124+81 C.L.
NEW 18" X 56' PCCSP (.064), CAAP (.060) CPEP OR RCP, CL. III, WITH STONE FILL, TYPE I, AT OUTLET

CUL. DIT. & DR.(P)

REV. 123+00 C.L.
NEW 18" X 56' RCCP (.064), CAAP (.060) CPEP, OR RCP, CL. III, WITH STONE FILL, TYPE I, AT OUTLET

REV. 117+90 C.L.
NEW 18" X 60' PCCSP (.064), CAAP (.060) CPEP, OR RCP, CL. III, WITH STONE FILL, TYPE I, AT OUTLET

REV. 115+50 C.L.
NEW 18" X 60' PCCSP (.064), CAAP (.060) CPEP, OR RCP, CL. III, WITH STONE FILL, TYPE I, AT OUTLET

REV. 112+78
50' LT.

REV. 112+22 C.L.
EXIST. 15" RCP
REMOVE

STA. 110+25 LT
EXIST. 15" RCP
REMOVE

STA. 110+20 C.L.
NEW 30" X 92' PCCSP
CAAP (.075), RCP CLASS III W/STONE FILL, TYPE II, AT OUTLET
4'X6' D.I. W/2 GRATES

APPROX. AERIAL RELOC. ROUTE BY GMP, NBES, NET, HYPERION

REV. 116+81.3
50' LT.

REV. 122+00
50' LT.

391'
395'

(5,596')
(2,194')

SRP(T)
CONST(T)

CH(P)
DR(P)
SRP(P)
CONST (T)

6' UNDERDRAIN
(5) SURV. 110+25 RT- REV. 112+50 RT
NEW 6'' X 224' UNDERDRAIN W/FB @ 110+25 RT
(7) REV. 122+00 LT- REV. 123+25 LT
NEW 6'' X 125' UNDERDRAIN W/FB @ 122+00 LT

6'' UNDERDRAIN CARRIER PIPE
(6) REV. 112+50 RT-LT
NEW 6'' X 65' UNDERDRAIN CARRIER PIPE W/FB @ 112+50 RT
(8) REV. 123+25 LT-RT
NEW 6'' X 68' UNDERDRAIN CARRIER PIPE W/FB @ 123+25 LT

0 50 100
SCALE IN FEET

LINES SHOWN ON THIS PLAN AS EXISTING PROPERTY LINES (P/L) ARE BELIEVED TO BE ACCURATE BUT SHOULD NOT BE RELIED UPON FOR PURPOSES UNRELATED TO THE STATE OF VERMONT'S ACQUISITION OF LAND AND RIGHTS FOR THIS PROJECT.

FOR R.O.W. USE ONLY

REVISED

PROJECT NAME: SEARSBURG - WILMINGTON
PROJECT NUMBER: NHF 010-1(18)

PLOT FILE NAME: DD096L02
PROJECT LEADER: DELLA SANTA
DESIGN FILE: 78D096/DESIGN/DD096CNUI.DGN
PLOT DATE: 06-JUN-2001
DRAWN BY: SQUAD B

R.O.W. SHEET 23 OF 36

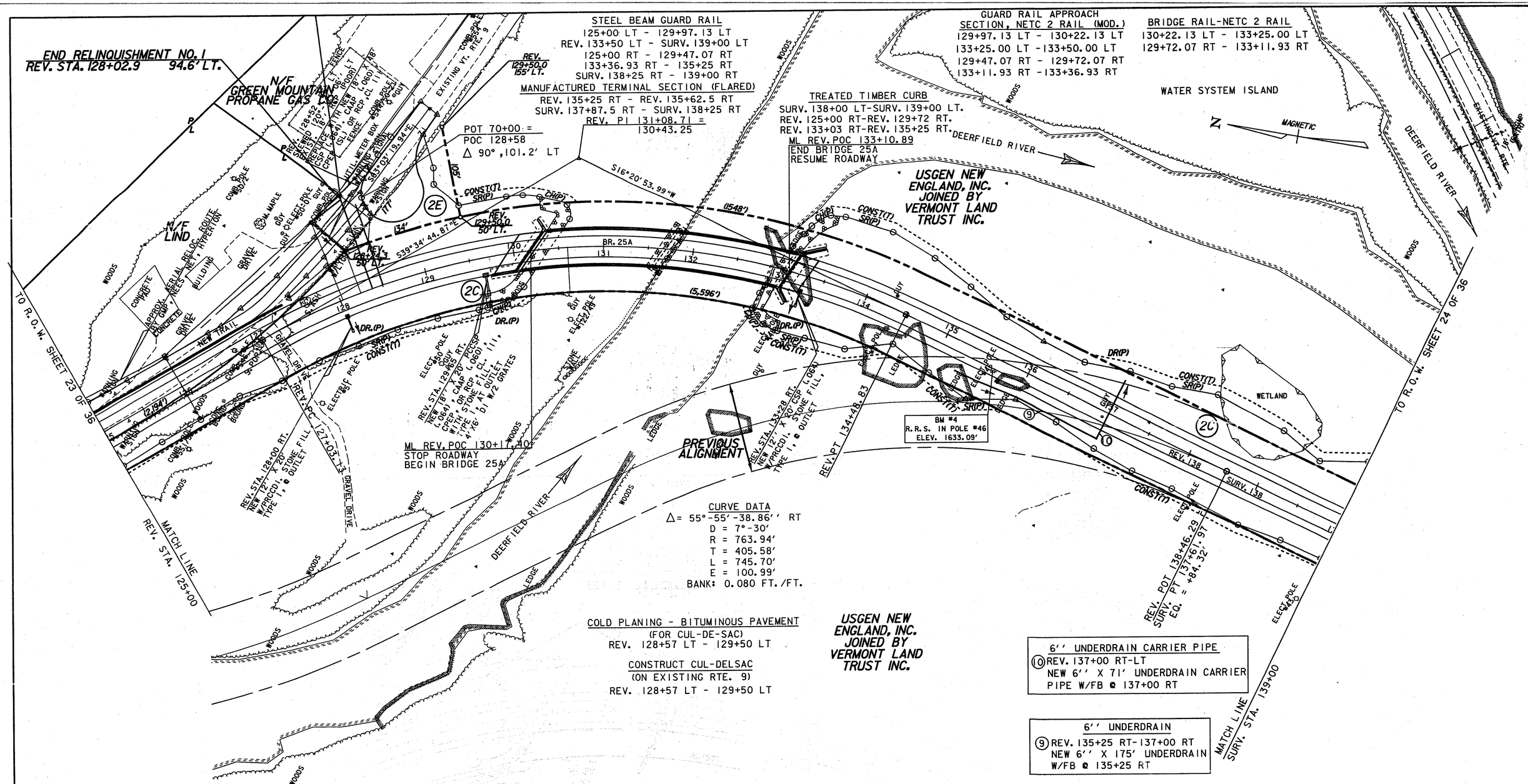

LINES SHOWN ON THIS PLAN AS EXISTING PROPERTY LINES (P/L) ARE BELIEVED TO BE ACCURATE BUT SHOULD NOT BE RELIED UPON FOR PURPOSES UNRELATED TO THE STATE OF VERMONT'S ACQUISITION OF LAND AND RIGHTS FOR THIS PROJECT.

WATER SYSTEM ISLAND

THE WATER SYSTEM ISLAND TO THE EAST OF THE NEW ALIGNMENT AND BETWEEN THE TWO BRANCHES OF THE DEERFIELD RIVER SHALL BE CONSIDERED A ''NO DISTURBANCE AREA'' AND, THEREFORE, NO CONSTRUCTION ACTIVITY SHALL BE CONDUCTED ON THIS ISLAND.

FOR R.O.W. USE ONLY

REVISED

PROJECT NAME: SEARSBURG - WILMINGTON
PROJECT NUMBER: NHF 010-1(18)

PLOT FILE NAME: DD096L03
PROJECT LEADER: DELLA SANTA
DESIGN FILE: 78D096/DESIGN/DD096CNUI.DGN
PLOT DATE: 20-JUN-2001
DRAWN BY: SQUAD B

R.O.W. SHEET 23A OF 36 SHEETS

SHEET 46 OF 435
SEP 21 2001

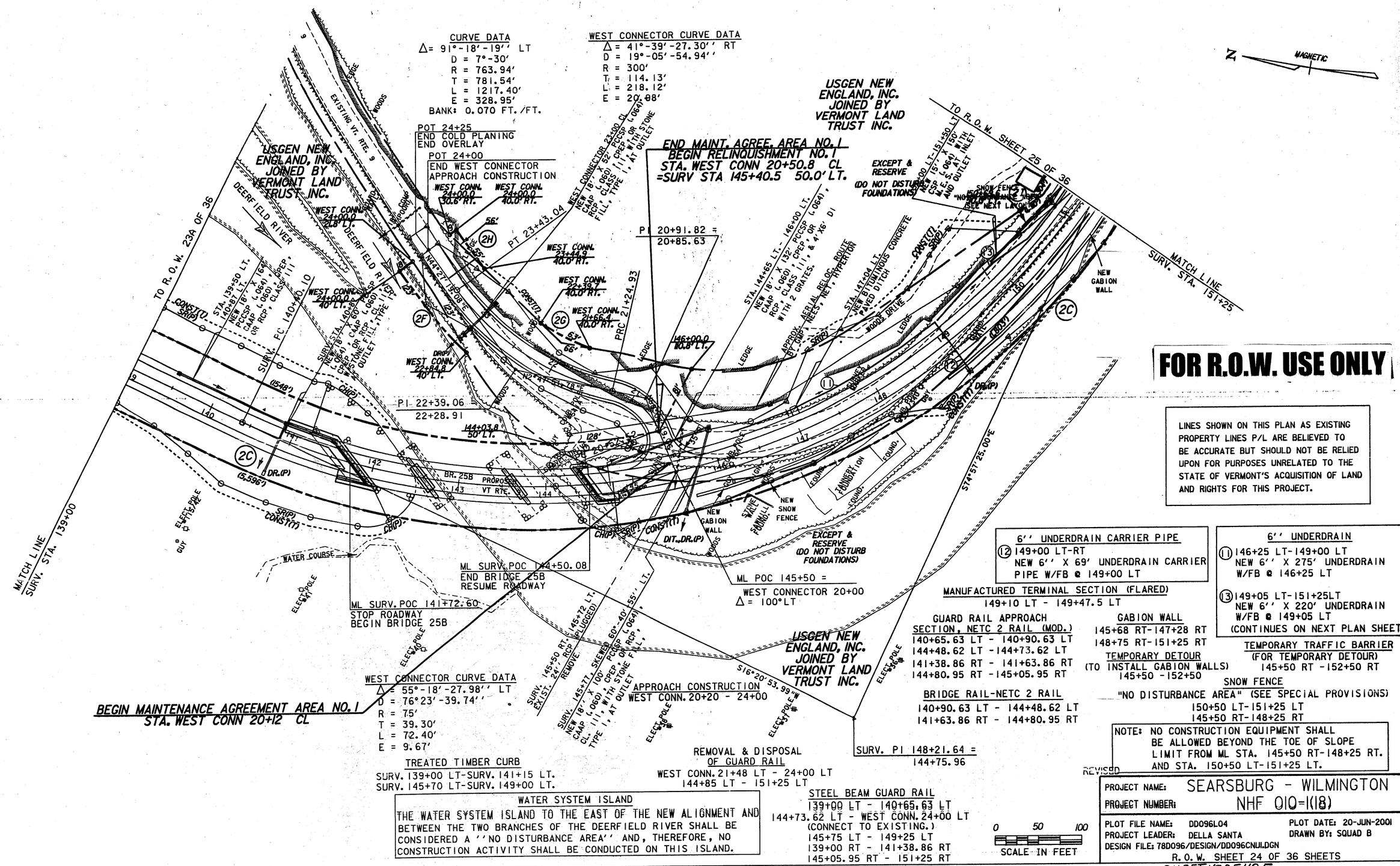
CURVE DATA
Δ= 91°-18'-19'' LT
D = 7°-30'
R = 763.94'
T = 781.54'
L = 1217.40'
E = 328.95'
BANK: 0.070 FT./FT.
WEST CONNECTOR CURVE DATA
Δ = 41°-39'-27.30'' RT
D = 19°-05'-54.94''
R = 300'
T = 114.13'
L = 218.12'
E = 20.88'
POT 24+25
END COLD PLANING
END OVERLAY
POT 24+00
END WEST CONNECTOR
APPROACH CONSTRUCTION
USGEN NEW ENGLAND, INC. JOINED BY VERMONT LAND TRUST INC.
END MAINT. AGREE. AREA NO. 1
BEGIN RELINQUISHMENT NO. 1
STA. WEST CONN 20+50.8 CL
=SURV STA 145+40.5 50.0' LT.
TO R.O.W. 23A OF 36
TO R.O.W. SHEET 25 OF 36
MATCH LINE SURV. STA. 151+25
MATCH LINE SURV. STA. 139+00
DEERFIELD RIVER
EXISTING VT. RTE. 9
WOODS
WEST CONN. 24+00.0 30.6' RT.
WEST CONN. 24+00.0 40.0' RT.
WEST CONN. 24+00.0 21.8' LT.
WEST CONN. 24+00.0 40.0' LT.
WEST CONN. 23+44.9 40.0' RT.
WEST CONN. 23+39.7 40.0' RT.
WEST CONN. 21+66.4 40.0' RT.
WEST CONN. 22+84.8 40' LT.
PT 23+43.04
PI 20+91.82 = 20+85.63
PRC 21+24.93
146+00.0 10.8' LT.
PI 22+39.06 = 22+28.91
144+03.8 50' LT.
STA. 139+50 LT. 140+87 LT. NEW 18" X 164' PCCSP (.064") CAAP (.060") OR RCP, CLASS III
SURV. PC 140+40.10
SURV. STA. 140+87 NEW 18" X 164' CAAP (.060") OR RCP (.064") WITH STONE FILL, TYPE I, AT OUTLET
NEW 18" X 52' PCCSP (.064") CAAP (.060") OR RCP, CLASS III, TYPE I
N14°27'18"E
N2°41'53.18"E
S74°57'25.00"E
S16°20'53.99"W
STA. 144+65 LT.- 146+00 LT. NEW 18" X 132' PCCSP (.064") CAAP (.060") OR RCP, CLASS III, WITH 2 GRATES.
APPROX. AERIAL RELOC. ROUTE BY CMP, REES, NET, HYPERTON
STA. 141+04 LT. NEW BITUMINOUS CONCRETE PAVED DITCH
WOODS DRIVE
LEDGE
EXCEPT & RESERVE (DO NOT DISTURB FOUNDATIONS)
STA. 151+50 LT- 151+50 LT NEW 15" X 150' CMP E.S. AT INLET AND OUTLET
SNOW FENCE "NO DISTURBANCE AREA" (SEE SPECIAL PROVISIONS) (SEE NEXT LAND PLAN SHEET)
NEW GABION WALL
NEW SNOW FENCE
STONE WALL
FOUND.
FENCE
CONST(T)
SR(P)
DR.(P)
DIT.,DR.(P)
CHIP(P)
ELECT. POLE
GUY
WATER COURSE
BR. 25B PROPOSED VT RTE. 9
ML SURV. POC 144+50.08
END BRIDGE 25B
RESUME ROADWAY
ML SURV. POC 141+72.60
STOP ROADWAY
BEGIN BRIDGE 25B
ML POC 145+50 =
WEST CONNECTOR 20+00
Δ = 100°LT
SURV. 145+50 RT. EXIST. 24" RCP REMOVE
(145+72 LT. PLUGGED)
SURV. 145+77 LT. SKEWED 60'-40' 55' LT. NEW 18" X 100' PCCSP (.064") CAAP (.060") CPEP OR RCP CL. III, WITH STONE FILL, TYPE I, AT OUTLET
SURV. PI 148+21.64 = 144+75.96
BEGIN MAINTENANCE AGREEMENT AREA NO. 1
STA. WEST CONN 20+12 CL
WEST CONNECTOR CURVE DATA
Δ = 55°-18'-27.98'' LT
D = 76°23'-39.74''
R = 75'
T = 39.30'
L = 72.40'
E = 9.67'
APPROACH CONSTRUCTION
WEST CONN. 20+20 - 24+00
TREATED TIMBER CURB
SURV. 139+00 LT-SURV. 141+15 LT.
SURV. 145+70 LT-SURV. 149+00 LT.
REMOVAL & DISPOSAL OF GUARD RAIL
WEST CONN. 21+48 LT - 24+00 LT
144+85 LT - 151+25 LT
WATER SYSTEM ISLAND
THE WATER SYSTEM ISLAND TO THE EAST OF THE NEW ALIGNMENT AND BETWEEN THE TWO BRANCHES OF THE DEERFIELD RIVER SHALL BE CONSIDERED A ''NO DISTURBANCE AREA'' AND, THEREFORE, NO CONSTRUCTION ACTIVITY SHALL BE CONDUCTED ON THIS ISLAND.
STEEL BEAM GUARD RAIL
139+00 LT - 140+65.63 LT
144+73.62 LT - WEST CONN. 24+00 LT (CONNECT TO EXISTING.)
145+75 LT - 149+25 LT
139+00 RT - 141+38.86 RT
145+05.95 RT - 151+25 RT
GUARD RAIL APPROACH SECTION, NETC 2 RAIL (MOD.)
140+65.63 LT - 140+90.63 LT
144+48.62 LT - 144+73.62 LT
141+38.86 RT - 141+63.86 RT
144+80.95 RT - 145+05.95 RT
BRIDGE RAIL-NETC 2 RAIL
140+90.63 LT - 144+48.62 LT
141+63.86 RT - 144+80.95 RT
GABION WALL
145+68 RT-147+28 RT
148+75 RT-151+25 RT
TEMPORARY DETOUR
(TO INSTALL GABION WALLS)
145+50 - 152+50
MANUFACTURED TERMINAL SECTION (FLARED)
149+10 LT - 149+47.5 LT
6'' UNDERDRAIN CARRIER PIPE
(12) 149+00 LT-RT
NEW 6'' X 69' UNDERDRAIN CARRIER PIPE W/FB @ 149+00 LT
6'' UNDERDRAIN
(11) 146+25 LT-149+00 LT
NEW 6'' X 275' UNDERDRAIN W/FB @ 146+25 LT
(13) 149+05 LT-151+25LT
NEW 6'' X 220' UNDERDRAIN W/FB @ 149+05 LT
(CONTINUES ON NEXT PLAN SHEET)
TEMPORARY TRAFFIC BARRIER
(FOR TEMPORARY DETOUR)
145+50 RT - 152+50 RT
SNOW FENCE
"NO DISTURBANCE AREA" (SEE SPECIAL PROVISIONS)
150+50 LT-151+25 LT
145+50 RT-148+25 RT
NOTE: NO CONSTRUCTION EQUIPMENT SHALL BE ALLOWED BEYOND THE TOE OF SLOPE LIMIT FROM ML STA. 145+50 RT-148+25 RT. AND STA. 150+50 LT-151+25 LT.
LINES SHOWN ON THIS PLAN AS EXISTING PROPERTY LINES P/L ARE BELIEVED TO BE ACCURATE BUT SHOULD NOT BE RELIED UPON FOR PURPOSES UNRELATED TO THE STATE OF VERMONT'S ACQUISITION OF LAND AND RIGHTS FOR THIS PROJECT.
MAGNETIC
FOR R.O.W. USE ONLY
REVISED
0 50 100
SCALE IN FEET
PROJECT NAME: SEARSBURG - WILMINGTON
PROJECT NUMBER: NHF 010-1(18)
PLOT FILE NAME: DD096L04
PROJECT LEADER: DELLA SANTA
DESIGN FILE: 78D096/DESIGN/DD096CNUI.DGN
PLOT DATE: 20-JUN-2001
DRAWN BY: SQUAD B
R. O. W. SHEET 24 OF 36 SHEETS
SHEET 47 OF 435
SEP 21 2001

USGEN NEW ENGLAND, INC.,
JOINED BY
VERMONT LAND TRUST, INC,

NOTE: NO CONSTRUCTION EQUIPMENT SHALL BE ALLOWED BEYOND THE TOE OF SLOPE LIMIT FROM ML STA. 151+25 LT-154+50 LT.

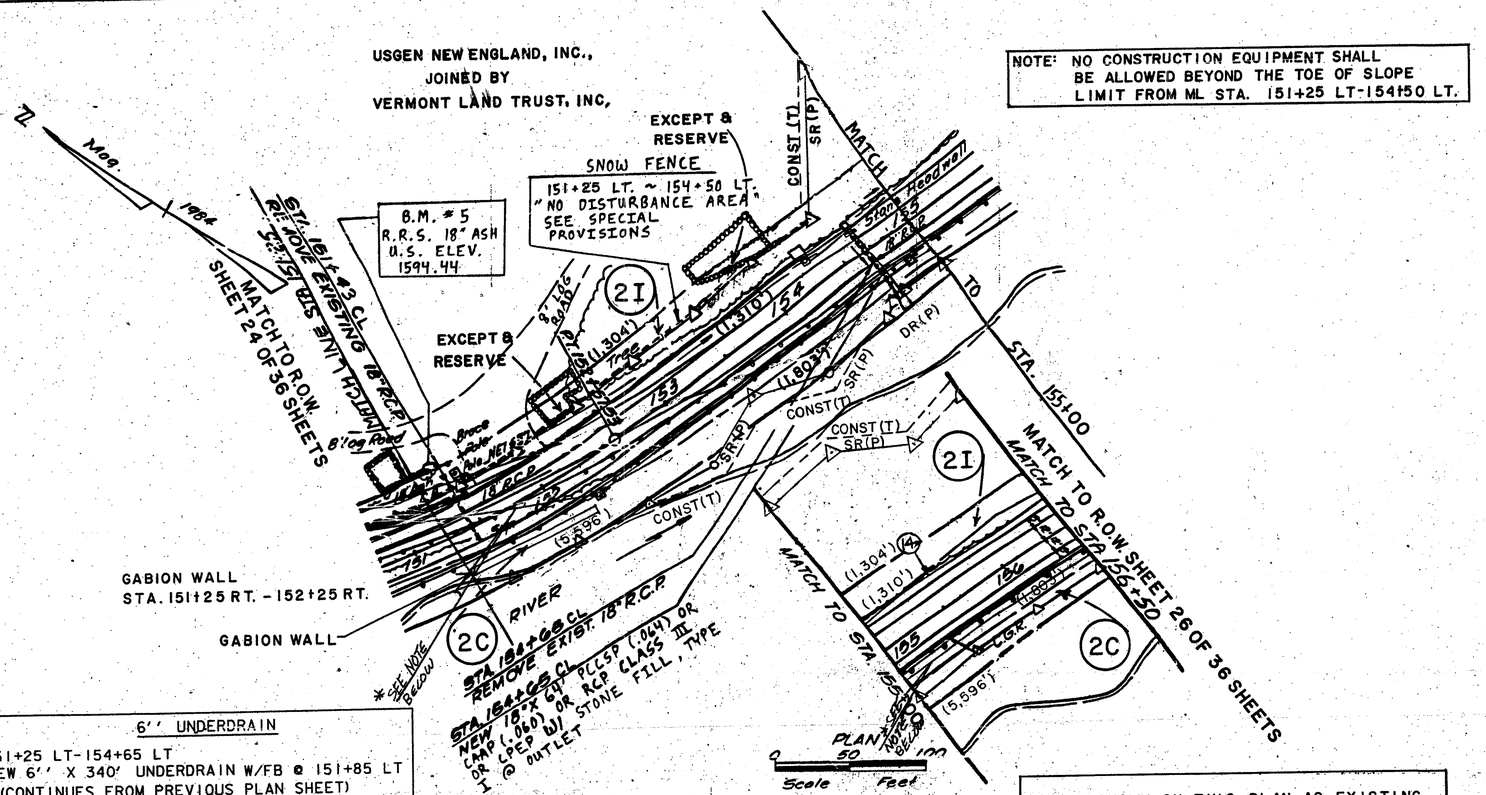

6'' UNDERDRAIN

(13) 151+25 LT-154+65 LT
NEW 6'' X 340' UNDERDRAIN W/FB @ 151+85 LT
(CONTINUES FROM PREVIOUS PLAN SHEET)

(14) 154+70 LT-157+00LT
NEW 6'' X 230' UNDERDRAIN W/FB @ 154+70 LT

NOTE: ON NEXT PLAN SHEET THE UNDERDRAIN NUMBERING SKIPS (15) AND (16) AND RESUMES WITH (17)

USGEN NEW ENGLAND, INC.,
JOINED BY
VERMONT LAND TRUST, INC.

*NOTE: APPROX. AERIAL RELOC. ROUTE BY GMP, NEES, NET, HYPERION

LINES SHOWN ON THIS PLAN AS EXISTING PROPERTY LINES (P/L) ARE BELIEVED TO BE ACCURATE BUT SHOULD NOT BE RELIED UPON FOR PURPOSES UNRELATED TO THE STATE OF VERMONT'S ACQUISITION OF LAND AND RIGHTS FOR THIS PROJECT.

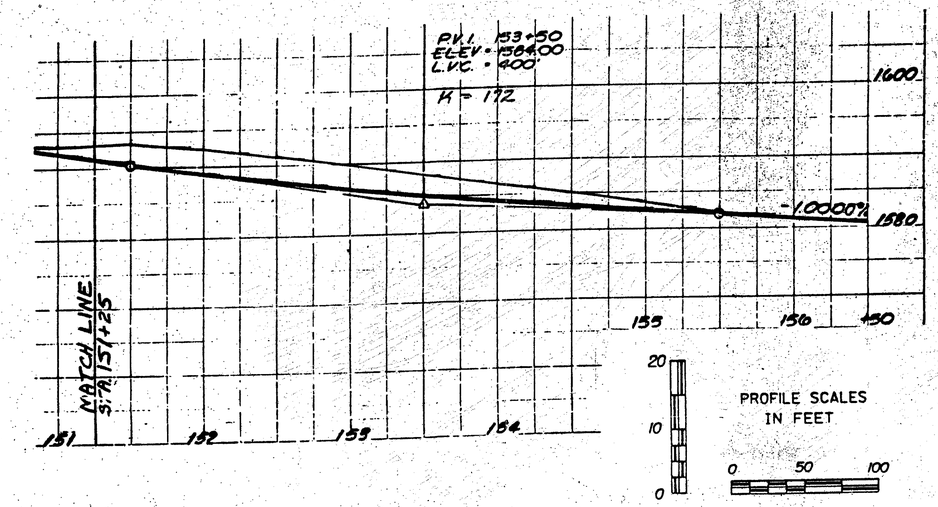

FOR R.O.W. USE ONLY

REVISED

PROJECT NAME: SEARSBURG - WILMINGTON
PROJECT NUMBER: NHF 010-1(18)

PLOT FILE NAME: DD096L05
PROJECT LEADER: DELLA SANTA
DESIGN FILE: 78D096/DESIGN/DD096CBR.DGN
PLOT DATE: 07-OCT-2000
DRAWN BY: SQUAD B

ROW SHEET 25 OF 36

SHEET 48 OF 435

SEP 21 2001

REMOVAL AND DISPOSAL OF GUARD RAIL
161+10, LT. - 164+95, RT.

CONSTRUCT DRIVE
167+41, LT. (GRAVEL)
169+92, LT. (GRAVEL)
178+12, LT. (GRAVEL)

REMOVAL AND DISPOSAL OF GUIDE POSTS
165+10, RT. - 167+10, RT.

EROSION MATTING
164+30 - 168+00, LT.

USGEN NEW ENGLAND, INC.,
JOINED BY
VERMONT LAND TRUST, INC.

LINZER - HULTEN, CHARLENE
HULTEN, JOHN P.

MAY, JEFFREY HAYWARD & JONI R.

GUILLE, PETER JR

LINZER HULTEN, CHARLENE

Magnetic 1984

CONST. EASE (T)

SR (P)

VERMONT ROUTE 9

Exist Highway Boundary

Tree Line

Stone Wall

Stone Hdwl.

Wood G.P.s

Trees

Gravel Drive

Exist. Highway Boundary

Anchor Boundary

Conc. D.I.

Pole 534

Pole 533

Pole 5A 33

DIT (P)

DR (P)

CGR

18" RCP

15" RCP

12" Poplar

B.M.# G
R.P.S. 12" Poplar
U.S. Elev. = 1570.83

Approx Lot. of Underground Fuel Tank 6'x8'

GARAGE

DRIVE (T)

Leach Field

Approx. Location of Buried Sewer Mound System

WOOD RAIL FENCE

REMOVE & RESET (T)

15NF Ho.

W2

Well

1 1/2" SWP

Ho.

P L

C/L

G.M.P.

Br.

Cove

Dr.

Lt.

Rt.

(1304')

(1310')

(1803')

(5,596')

804'

553'

569'

328'

292'

285'

267'

310'

298'

280'

NET 534'

NET 631'

STA. 158+70
NEW 24"x66' PCCSP(064) OR CAAP(060) @ INLET
DITCH CHECK

STA. 161+50
NEW 16'x7' PCCSP(064) OR CAAP(060) w/ STONE FILL TYPE I OUTLET

STA. 163+65
NEW 30"x72" PCSP(PI).079 OR CAAP.075 w/ STONE DITCH LT. @ RCP STA. 163+66 50' LT.

STA. 164+10 LT. TO RT.
NEW 6'x72" UNDERDRAIN

STA. 164+25
REMOVE EXISTING 24" R.C.P.

167+41 LT.
NEW 15"x68' CSP .064 W

STA. 168+00
NEW 30"x80' PCSP(PI).079 OR CAAP.075 w/ INLET, DITCH & CSPES @ INLET & STONE FILL TYPE I OUTLET

STA. 171+70
REMOVE EXIST. 18" RC.P.

172+12 LT.
NEW 15"x52' CSP.064 w/ CSPES @ INLET & OUTL

MATCH TO R.O.W. SHEET 25 OF 36 SHEETS STA. 156+50

MATCH TO R.O.W. SHEET 27 OF 36 SHEETS STA 172+50

P.C. 156+65.82

P.T. 161+44.93

CURVE DATA G
Δ = 19°09'51.0" RT.
D = 4°00'00"
R = 1432.40'
T = 241.81'
L = 479.11'
E = 20.27'
Bank = 0.063'/'

STA. 158+70
REMOVE EXISTING 24" RCP

STA. 163+65
NEW 30"x86' PCCSP(PI).079 OR CAAP.075 w/ DITCH @ INLET

DRILLING AND BLASTING SOLID ROCK SUBGRADE
160+00 - 164+50

STEEL BEAM GUARD RAIL
156+50 - 170+60, RT.

PLAN
0 50 100
Scale Feet

LINES SHOWN ON THIS PLAN AS EXISTING PROPERTY LINES (P/L) ARE BELIEVED TO BE ACCURATE BUT SHOULD NOT BE RELIED UPON FOR PURPOSES UNRELATED TO THE STATE OF VERMONT'S ACQUISITION OF LAND AND RIGHTS FOR THIS PROJECT.

P.V.I. 172+50
ELEV. = 1565.00
L.V.C. = 500'
E = -0.09'
S.S.D. = 914'

-1.00%

-1.00%

6" UNDERDRAIN

PROFILE
SCALE IN FEET
0 50 100

1580
1560
1540
1520
1550
1540
1530

156+50 157 158 159 160 161 162 163 164 165 166 167 168 169 170

PLAN
SURVEYED
DESIGNED
NOTE BOOK
No.
DATE
BY
ALIGNMENT CHECKED
R. OF WAY CHECKED

PROFILE
SURVEYED
DESIGNED
NOTE BOOK
No.
DATE
BY
GRADES CHECKED
R. & C.'s NOTED
STRUCTURE EXCAVATIONS CHECKED

FOR R.O.W. USE ONLY

171 172 REVISED

SEARSBURG — WILMINGTON
F 010 — 1 (18)
MAINLINE
R.O.W. SHEET 26 OF 36

K·E PLATE 1, PLAN-PROFILE
KEUFFEL & ESSER CO.

SEP 21 2001

CURVE DATA 7
Δ = 27°52'00" LT.
D = 5°00'00"
R = 1145.92'
T = 284.29'
L = 557.34'
E = 34.74'
Bank = 0.071/1

REMOVING AND RESETTING FENCE
172+50, LT. - 175+00±, LT.

EROSION MATTING
178+80 - 179+50, LT.
181+00 - 184+00, LT.

SCARIFYING PAVEMENT
174+50 TO 177+00

CONSTRUCT DRIVE
175+15, LT. (GRAVEL)
178+35, LT. (GRAVEL)
183+40, LT (PAVED)
185+40, LT (GRAVEL)

DEMOLITION AND DISPOSAL OF BUILDING NO.1 AT STA. 184+40, LT.

GREEN MOUNTAIN NATIONAL FOREST
U.S.D.A.

MAY, JEFFREY H. & JONI R.

PENSON, RAYMOND

WILLIAM E. DAILEY INC.

GUILLE, PETER JR.

Relocate Mailbox Single Support
172+42 To 172+45 LT.

STEEL - BEAM GUARD RAIL
176+00 - 187+00, RT.

CURVE DATA 8
Δ = 8°13'48.5" RT.
D = 1°30'00"
R = 3819.72'
T = 274.81'
L = 548.68'
E = 9.87'
Bank = 0.030 1/1

PLAN
0 50 100
Scale Feet

PW.I. 172+50
ELEV. = 1565.00
L.VC. = 500'
E = -0.03'
SSD = 914'

PW.I. 178+75
ELEV. = 1552.50
L.VC. = 450.00'
E = +1.69'
V = 150

PW.I. 185+50
ELEV. = 1539.25
L.VC. = 600.00'
E = -2.22'
SSD = 519'

-2.00%
+1.00%
-1.90%

PROFILE
SCALE IN FEET

EQUALITY = 0.48'
184+30.24 BK =
184+29.76 AHD

FOR R.O.W. USE ONLY

SEARSBURG — WILMINGTON
F 010 — 1 (18)
MAINLINE
R.O.W. SHEET 27 OF 36

PLATE 1, PLAN PROFILE
KEUFFEL & ESSER CO.

DEC 04 2001 SHEET 50 OF 435

CONSTRUCT DRIVE
192+45, LT. (GRAVEL)
195+42, LT. (GRAVEL)
198+35, LT. (GRAVEL

CURVE DATA 9
Δ = 11°04'12.0" LT.
D = 2°00'00"
R = 2864.79'
T = 277.61'
L = 553.50'
E = 13.42'
Bank = 0.038'/'

EROSION MATTING
188+75 - 190+25, LT.
196+50 - 202+50 LT.
REMOVAL AND DISPOSAL OF GUARD RAIL
186+05, RT. - 194+00, RT.

WILLIAM E. DAILEY INC.

P I L

CONST. SR (P) EASE. (T) (728')

188+40 50' LT.

CONST. EASE. (T) SR (P)

188+45 6' RT.

188+48 32' RT.

NET 524

Anchor

C. 187+65.37

Trees

Conc. Footers

DRIVE (T)

BRESCIA, ANTHONY M.

Gravel Drive

926'

STA. 192+00 NEW 18"X100' PCCSP .064 OR CAAP .060 w/CSPES OR CAAPES INLET & DITCH w/STONE FILL TYPE I @ OUTLET

Magnetic 1984

CONST. SR (T) EASE. (T)

STA. 194+33 REMOVE EXIST. 18" R.C.P.

STA. 195+16.87

STA. 196+00 NEW 18"X56' PCCSP .064 OR CAAP .060 w/CSPES OR CAAPES INLET & DITCH w/STONE FILL TYPE I @ OUTLET

DRIVE (T)

Exist. Highway Boundary

Trees

Pipe

Wood Posts

Tree Line

Power Pole

STA. 198+36 LT. NEW 15"X36' CSP .064 w/CSPES @ INLET & OUTLET

8" Maple

Gravel Drive

Clump of 5" White Birch

Overhead Lines

TOWNE, DONALD M.

REMOVE & RESET (T)

197+75 50' LT.

197+75 20' LT.

197+71

197+67 50' RT.

197+62 92' RT.

NET 521 w/Brace Pole

NET 97X E 97XX w/ Transformer

NET 522 w/Brace Pole

18" Oak

Pipe CONST. EASE. (T) TOWNE, DONALD M.

SR (T)

P.O.T. 200+84.36

BENNINGTON COUNTY
TOWN OF SEARSBURG
TOWN OF WILMINGTON
WINDHAM COUNTY

201+17 50' LT.

201+10 7' LT.

201+03 43' RT.

567' Brush & Trees

637'

649'

County Line Sign

CONST. EASE. (T)

Existing Highway Boundary

201+00 50' RT.

DEERFIELD RIVER

MATCH LINE

SHEET 29

8A 8B 8C 5A 5B 5C 30A 30B 30C 9A 9B 9C 9E 9F

187 188 189 190 191 192 193 194 195 196 197 198 199 200 201 202

(731') (727') (733')

942' 943' 337' 334' 333' 342' 202'

Manhole

Sign

C.B. 4'

CGR

NET 523

Trees

GUILLE, PETER JR.

B.M. # 8
R.R.S. 18" Oak
U.S. Elev. 1537.01

SCARIFYING PAVEMENT
188+00 TO 190+50
192+50 TO 198+00

STEEL BEAM GUARD RAIL
187+00 - 187+75 RT.

Relocate Mailbox Single Support
198+45 TO 198+43 LT.

PLAN
0 50 100
Scale Feet

P.O.T. 188+37.31

188+52 60' RT.

188+54 82' RT.

Exist. Highway Boundary

STA. 190+43 REMOVE EXIST. 15" R.C.P.

PLAN
SURVEYED
PLOTTED
NOTE BOOK
No.
DATE
BY
CHART CHECKED
R. W.'s NOTED
STRUCTURE NOTATIONS CHECKED

PROFILE
SURVEYED
PLOTTED
NOTE BOOK
No.
DATE
BY
CHART CHECKED
R. W.'s NOTED
STRUCTURE NOTATIONS CHECKED

1580 1560 1540 1520 1500

-1.96%

-0.52%

PVI 199+50
ELEV. = 1531.81
L.V.C. = 800'
E = 1.44'
K = 5.56

1530 1520 1510
0 50 100
PROFILE SCALE IN FEET

FOR R.O.W. USE ONLY

SEARSBURG — WILMINGTON
F 010 — 1 (18)
MAINLINE
R.O.W. SHEET 28 OF 36

DEC 04 2001

PLATE 1, PLAN & PROFILE

SHEET 51 OF 439

EROSION MATTING
202+50 - 204+00, LT.
215+50 - 217+00, LT.

NEW INLET DITCH - W/STONE FILL, TYPE II TO MEET EXISTING CREEK

STA. 207+50, RT.
REMOVE EXIST. 10'X5' CONC. CULV.
24" Stone Culvert

STA. 203+00 TO STA. 204+00, LT.
SPECIAL DITCH, WIDTH VARIES
X100'

MATCH TO R.O.W. SHEET 28 OF 36 SHEETS

STA. 202+50

DAVIE, KENNETH
DAVIE, WILLIAM B.

TOWNE, DONALD M.

B.M. #9
R.P.S. 20" Maple
U.S. Elev. 1526.72

206+80
50' LT.

DIT. (P)

Gravel Drive

Creek

Boulder

CONST. EASE. (T)

SR (T)

Brush & Trees

Stone Wall

Gravel Road

15" R.C.P.

Anchor

Welcome Sign

TOWNE, DONALD F.

Exist. Highway Boundary

DEERFIELD RIVER

STA. 203+22, RT.
REMOVE EXIST. 15" R.C.P.

PC. 205+82.23

STA. 207+14, SKEW ∠ 59° RT.
NEW 10'-6" X 6'-7" X 106'
(3) 1'-1" CORR. PCCSP. 138 CONC.
CRADLES: 20'-2" X 6'-5" AT BOTH ENDS
SEE DRAINAGE DETAIL SHEET NO. 6

NEW OUTLET DITCH - W/STONE FILL TYPE II, TO MEET EXIST. CREEK

STA. 210+00, SKEW ∠ 73° RT.
NEW 54" X 84" PCCSP. 109 OR CAAP
.105 W/STONE FILL TYPE II @ OUTLET
& INLET

CURVE DATA 10
Δ = 29°38'27.0" RT.
D = 5°00'00"
R = 1145.92'
T = 303.20'
L = 592.82'
E = 39.43'
Bank = 0.071'/'

REMOVAL AND DISPOSAL OF GUARD RAIL
207+13, RT. - 207+83, RT.
207+18, RT. - 207+88, RT.
211+24, RT. - 216+87, RT.

STEEL BEAM GUARD RAIL
206+00 - 209+00, LT.
205+82 - 217+00, RT.

CONSTRUCT DRIVE
211+00, LT. (GRAVEL)

DRILLING AND BLASTING OF SOLID ROCK SUBGRADE
211+75 - 215+75

REMOVING AND RESETTING FENCE
215+50±, LT. TO 220+50±, LT.

MORSE, VIOLA B.
GMP 14

DRIVEWAY DITCH

211+28
50' LT.

212+04
23' LT.

212+04
2' RT.

212+04
27' RT.

212+04
37' RT.

215+35
50' LT.

213+55
50' RT.

216+87
28' RT.

216+92
50' RT.

PT. 211+78.05

STA. 212+60
NEW 18"X64" PCCSP. 064 OR CAAP. 060

STA. 212+60
REMOVE EXIST. 18" C.M.P.

Overhead Power Lines

STA. 215+00
NEW 18"X68" PCCSP. 064 OR CAAP. 060
CONST. T. TO RT. EASE. (T)

STA. 215+75
NEW 6'X 82' UNDERDRAIN

PC. 214+15.91

CURVE DATA 11
Δ = 32°06'46.9" LT.
D = 7°30'00"
R = 763.94'
T = 219.87'
L = 428.17'
E = 31.01'
Bank = 0.080'/'

B.M. #10
R.P.S. 28" Ash
U.S. Elev. 1521.03

MATCH TO R.O.W. SHEET 30 OF 36 SHEETS STA. 217+00

ROUTE 9 214 (1787')

Exist. Highway Boundary (1152')

Exist. Highway Boundary (344')

DEERFIELD RIVER

USGEN NEW ENGLAND, INC.
JOINED BY
VERMONT LAND TRUST, INC.

PLAN
0 50 100
Scale Feet

LINES SHOWN ON THIS PLAN AS EXISTING PROPERTY LINES (P/L) ARE BELIEVED TO BE ACCURATE BUT SHOULD NOT BE RELIED UPON FOR PURPOSES UNRELATED TO THE STATE OF VERMONT'S ACQUISITION OF LAND AND RIGHTS FOR THIS PROJECT.

P.V.I. 213+25
ELEV. = 1524.66
L.V.C. = 400'
E = -0.45'
SS.D. = 938

-0.52%

-1.42%

6" UNDERDRAIN

1560
1540
1520
1500
1480

202 203 204 205 206 207 208 209 210 211 212 213 214 215

1510
1500
1490

0 50 100
PROFILE
SCALE IN FEET

FOR R.O.W. USE ONLY

216 217 REVISED

SEARSBURG — WILMINGTON
F 010 — 1 (18)
MAINLINE
R.O.W. SHEET 29 OF 36 SHEETS

PLATE 1, PLAN-PROFILE
K&E KEUFFEL & ESSER CO.

SEP 21 2001 SHEET 52 OF 435

PLAN: SURVEYED, PLOTTED, NOTE BOOK, No., GRADES CHECKED, ALIGNMENT CHECKED, STRUCTURE INSTALLATIONS CHECKED, BY, DATE

PROFILE: SURVEYED, PLOTTED, NOTE BOOK, No., GRADES CHECKED, ALIGNMENT CHECKED, STRUCTURE INSTALLATIONS CHECKED, BY, DATE

REMOVING AND RESETTING FENCE
215+50±, LT. TO 220+50±, LT.
223+00±, LT. TO 227+00±, LT.

STA. 222+00 - 223+94 LT.
NEW 12"X208' CSP (.064), CPEP(SL) OR RCP, CL III

STA. 223+55 LT.
CONSTRUCT SPECIAL DITCH W/STONE FILL TYPE II

STA. 225+25 LT.
REMOVE EXIST. 18" RCP

STA. 226+175 LT.
NEW 15"X32' CSP .064

STA. 227+00 TO STA. 228+50
SPECIAL DITCH, 4' WIDE X 66'

STA. 228+00
NEW 18"X66' PCCSP .060 OR CAAP .060

MATCH ROW SHEET 31 OF 36 SHEETS

STONE FILL TYPE II SLOPE BLANKET
STA. 219+25 ~ 220+75 LT. (DRIVE)
STA. 220+75 ~ 223+23 LT.

REMOVING AND RESETTING FENCE
215+50 ± LT. TO 220+50 ± LT.
223+00 ± LT. TO 227+00 ± LT.

STEEL BEAM GUARD RAIL
217+00 - T.H. 31, RT.
T.H. 31 - 229+00, RT.
220+25 - 224+25, LT. (ALONG RT. SIDE OF DRIVE)

REMOVAL AND DISPOSAL OF GUARD RAIL
217+42, RT. - 219+71, RT.
226+60, LT. - 230+00, RT.

DECIDUOUS TREES 1"
SUGAR MAPLE 2-2½ CAL.
221+25 LT. 1 EA.
222+59 LT. 1 EA.
FLOWERING CRABAPPLE 2-2½" CAL.
221+64 LT. (RADIANT) 1 EA.
221+92 LT. (SNOWDRIFT) 1 EA.
222+20 LT. (ROYALTY) 1 EA.

ROUTE 9 217+60 = T.H. 31 20+00

CONST. EASE. (T) SR(P)

STA. 217+00 TO STA. 218+50 SPECIAL DITCH

STA. 218+50 - 219+25 LT. CONSTRUCT SPECIAL DITCH W/STONE FILL TYPE II

STA. 218+50 NEW 30"X18" PCCSP .07 OR CAAP .075 W/STONE FILL TYPE II @ INLET

CONST. EASE. (T) SR(P)

INSTALL (T)

219+00 DRIVE (T) 40' LT.

DIT. (P)

Stone Ret. Wall

Exist Highway Boundary

MATCH TO EXIST. T.H. 31 BRIDGE

STA. 218+50 REMOVE EXIST. 18" RCP

STA. 219+60 REMOVE EXIST. PIPES 15" RCP & 18" CMP

BRIDGE

TOWN OF WILMINGTON

217+87 50' RT

DEERFIELD RIVER

STA. 219+35 TO STA. 224+75 LT. 6' WIDE X 540' SODDED GUTTER

STA. 219+35 TO STA. 223+43 LT. 6' UNDERDRAIN X 410'

STA. 221+15 REMOVE EXIST. 15" RCP

END MAINT. AGREE. AREA NO. 2
STA. TH 31 20+35 CL

BEGIN MAINT. AGREE. AREA NO. 2
STA. TH 31 20+12 CL

STA. 223+45 REMOVE EXIST. 15" RCP

PC. 224+80.03

STA. 223+45 NEW 18"X54' PCCSP .064 CAAP .060 RCP CL III FILL TYPE I @ OUTLET

STA. 225+00 NEW 42"X80' PCCSP .109 OR CSPES OR CAAPES CAAP .105 W/ CSPES @ INLET

P.T. 227+55.80

EROSION MATTING
STA. 217+00 ~ 218+50 LT.
STA. 227+00 ~ 228+50 LT.

CONSTRUCT FIELD DRIVE
226+75 LT. (16' GRAVEL)

CURVE DATA 12
Δ = 35°40'58.1" RT.
D = 7°30'00"
R = 763.94'
T = 245.88'
L = 475.77'
E = 38.59'
BANK = 0.080'/'

CONSTRUCT DRIVE
218+50, LT. TO 225+75, LT. (GRAVEL).

ACCESS (P)

RELOCATE MAILBOX SINGLE SUPPORT
219+25 LT. TO 219+05 LT.

STA. 228+75 LT. TO RT.
NEW 6"X104' UNDERDRAIN

Leach Field
Septic Tank
2 SWF Ho.
Barn
MORSE, VIOLA B.
Boulder
Spring
W4
CUL. (P)
DIT. (P)
DRIVE (T)
CONST. EASE. (T)
CUL. (T)
Stone H.W.
20" Twin Maple
Stone Ret. Wall
Iron Pipe
BERGMAN, FREDERICK A. & LOIS A.
226+86 75' LT.
227+63 70' LT.
226+83 39' LT.
Trees
Exist. Const. Easement
Exist. Highway Boundary
USGEN NEW ENGLAND, INC. JOINED BY VERMONT LAND TRUST, INC.
DR. (P)
RIVERS EDGE
CHANNEL (P)
DEERFIELD RIVER
Survey Line
P.T. 227+55.80
P.C. 224+80.03
P.T. 227+55.80
Sign
Anchor
Tree
Shrub
Fence
Gate
Culvert
Catch Basin
Drop Inlet
Manhole
Utility Pole
Guy Wire
Light
Mail Box
Flag Pole
Bench Mark
Test Pit
Perc. Test
Deep Hole
Ledge
Rock Outcrop
Stone Wall
Wire Fence
Iron Fence
Hedge
Tree Line
Brook
Pond
Swamp
Marsh
Wetland
Flood Plain
Contour
Index Contour
Spot Elevation
Bench Mark
Test Pit
Perc. Test
Deep Hole
Ledge
Rock Outcrop
Stone Wall
Wire Fence
Iron Fence
Hedge
Tree Line
Brook
Pond
Swamp
Marsh
Wetland
Flood Plain
Contour
Index Contour
Spot Elevation

PLAN
0 50 100
Scale Feet

DECIDUOUS SHRUBS
(SNOWBALL 4'-5')
221+50 LT. 1 EA.
221+54 LT. 1 EA.
(SYRINGA FRENCH HYBRIDS)
221+74 CHAS-TOLY DBL. RED 1 EA.
221+78 EDITH CAVELLE DBL. WHT. 1 EA.
221+82 CHAS-TOLY DBL. RED 1 EA.
222+02 PRES. GREY DBL. BLUE 1 EA.
222+06 EDITH CAVELLE DBL. WHT. 1 EA.
222+10 PRES. GREY DBL. BLUE 1 EA.
(HYDRANGEA P.G. 24"-30")
222+30 LT. 1 EA.
222+34 LT. 1 EA.

* STA 218+50 ~ 219+50 (PAVED)
STA 223+50 ~ 225+75 (PAVED)

P.V.I. 224+25
ELEV. = 1509.04
L.V.C. = 400'
E = +1.21'
K = 165

+1.00%

CUT TO FILL TRANSITION

6" UNDERDRAIN

NOTE: DRIVEWAY SLOPE AT STA 221+00 LT & 223+55 LT SHALL BE CONSTRUCTED IN A MANNER TO ALLOW VEHICULAR PASSAGE TO ADJACENT FIELDS

REVEGITATION PLAN STA. 221+25 ~ 222+60 LT. (EDGE OF DRIVE, TOP OF ROADWAY SLOPE)
⊕ 2 ACER SACCHARUM (SUGAR MAPLE) 2-2½" CAL.
∅ 3 FLOWERING CRABAPPLE 2-2½" CAL.
⊗ 2 VIBURNUM OPULUS STERIUS (SNOWBALL) 4'-5'
⊖ 6 SYRINGA FRENCH HYBRIDS
Ⓘ 2 HYDRANGEA P.G. 24"-30"

221+25 ⊕ | 221+50 ⊗ | 221+54 ⊗ | 221+64 ∅ | 221+74 ⊖ | 221+78 ⊖ | 221+82 ⊖ | 221+92 ∅ | 222+02 ⊖ | 222+06 ⊖ | 222+10 ⊖ | 222+20 ∅ | 222+30 Ⓘ | 222+34 Ⓘ | 222+59 ⊕

NOTE: THE ABOVE IS A SUGGESTED PLANTING. FINAL ARRANGEMENT TO BE DETERMINED BY PROPERTY OWNER AND THE ENGINEER.

LINES SHOWN ON THIS PLAN AS EXISTING PROPERTY LINES (P/L) ARE BELIEVED TO BE ACCURATE BUT SHOULD NOT BE RELIED UPON FOR PURPOSES UNRELATED TO THE STATE OF VERMONT'S ACQUISITION OF LAND AND RIGHTS FOR THIS PROJECT.

NOTE:
FROM STA 215+40 LT. TO 226+40 LT. ALL TREES REMOVED ALONG THIS PROPERTY FRONTAGE SHALL BE CUT IN 4 FOOT LENGTHS FOR THE PROPERTY OWNERS USE AND SHALL BE PLACED IN A LOCATION AGREED UPON BY THE RESIDENT ENGINEER AND THE PROPERTY OWNER.

PROFILE
EXIST. 20+00 ELEV. 1514.48
P.V.I. 20+31 ELEV. 1512.68 L.V.C. 38' E = -0.19
P.V.I. 20+75 ELEV. 1518.34 L.V.C. 80' E = 1.03'
P.V.I. 21+00 ELEV. 1519.09
T.H. 31
-2.93%
+3.00%
-1.42%
+1.00%
1530
1520
1510
1500
1490
1480
1460
0 50 100
PROFILE SCALE IN FEET
217 218 219 220 221 222 223 224 225 226 227 228 229

REVISED

FOR R.O.W. USE ONLY

SEARSBURG — WILMINGTON
F 010 — 1 (18)
MAINLINE
R.O.W. SHEET 30 OF 36
SHEET 53 OF 435

K•E PLATE 1, PLAN-PROFILE KEUFFEL & ESSER CO.

MAY 23 2006

DRILLING AND BLASTING SOLID ROCK SUBGRADE
228+75 - 234+25

EROSION MATTING
234+50 - 236+35, LT.

BERGMAN, FREDERICK A. & LOIS A.

CONST. EASE. (T)

MATCH TO R.O.W. SHEET 30 OF 36 SHEETS STA. 229+00

MATCH TO R.O.W. SHEET 32 OF 36 SHEETS STA. 241+00

B.M. #11 Chiseled □ Rock U.S. Elev. 1607.91

Magnetic 1984

POT. 231+69.18

Broce E Net 50#

RAFUS, RAY & VIOLET

STA. 236+70 LT. REMOVE EXIST. 15" C.M.P.

STA. 237+45 LT. REMOVE EXIST. 25"x3" CONC. CULVERT

STA. 238+30 LT. REMOVE EXIST. C.M.P.

STA. 239+20 LT. REMOVE 16" EXIST. C.M.P.

STA. 240+00 LT. REMOVE EXIST. 15" STEEL PIPE

CURVE DATA 13
Δ = 26°15' 47.4" LT.
D = 4° 00' 00"
R = 1432.40'
T = 334.16'
L = 656.58'
E = 38.46'
Bank = 0.063'/'

Relocate Mailbox Single Support
241+41 To 241+40 LT.

REMOVAL AND DISPOSAL OF GUIDE POSTS
237+50, LT. - 237+80, LT.

SCARIFYING PAVEMENT
235+00 TO 238+00

CONSTRUCT DRIVE
236+62, LT. (PAVED)
239+29, LT. (GRAVEL)

EXCAVATION OF SURFACES AND PAVEMENTS
230+15, RT. TO 234+75, RT.

STEEL BEAM GUARD RAIL
229+00 - 230+58, RT.
235+00 - 241+00, RT.

USGEN NEW ENGLAND, INC.
JOINED BY
VERMONT LAND TRUST, INC.

DEERFIELD RIVER

VERMONT ROUTE 9

Existing Highway Boundary

CHANNEL

OVERFLOW CHANNEL

SURVEY ℄

BEGIN RELOCATION OVER FLOW CHANNEL STA. 237+32, RT.

END RELOCATION STA. 240+50 RT.

USGEN NEW ENGLAND, INC.
JOINED BY
VERMONT LAND TRUST, INC.

STA. 232+88, RT. REMOVE EXIST. 24" C.M.P.
STA. 233+50 NEW 18"x92" PCCSP.064 OR CAAP.060 R.C.P.C.L. III W/STONE FILL TYPE I @ OUTLET

STA. 234+25 LT. TO RT. NEW 6'x7'6" UNDERDRAIN

STA. 236+35 NEW 18"x72" PCCSP.064 OR CAAP.060 W/STONE FILL TYPE I @ OUTLET

STA. 238+50 NEW 48"x110" PCCSP.109 OR CAAP.105 w/ CSPES OR CAAPES @ OUTLET

STA. 238+98 TO STA. 239+65 LT. NEW 36"x66" CSP.079 OR CAAP.075 W/CSPES OR CAAPES @ INLET & OUTLET

EQUALITY = 7.17'
P.C. 238+76.24 BK.
238+83.41 AHD.

PLAN
0 50 100
Scale Feet

P.V.I. 231+00
ELEV. = 1515.74
L.V.C. = 400'
E = 0.96'
S.S.D. = 540'

P.V.I. 238+50
ELEV. = 1508.89
L.V.C. = 400'
E = +0.94'
K = 214

+4.00%

-0.92%

+0.95%

6" UNDERDRAIN

CUT TO FILL TRANSITION

PROFILE SCALE IN FEET
0 50 100
1490
1480
1470

1540
1520
1500
1480
1460

229 230 231 232 233 234 235 236 237 238 239 240

EQUALITY = 7.17'
238+76.24 BK. =
238+83.41 AHD

LINES SHOWN ON THIS PLAN AS EXISTING PROPERTY LINES (P/L) ARE BELIEVED TO BE ACCURATE BUT SHOULD NOT BE RELIED UPON FOR PURPOSES UNRELATED TO THE STATE OF VERMONT'S ACQUISITION OF LAND AND RIGHTS FOR THIS PROJECT.

FOR R.O.W. USE ONLY

241 REVISED

SEARSBURG — WILMINGTON
F 010 — 1 (18)
MAINLINE
R.O.W. SHEET 31 OF 36 SHEETS

PLAN: SURVEYED, PLOTTED, CHECKED, ALIGNMENT CHECKED, R.O.W. CHECKED, NOTE BOOK, No.

PROFILE: SURVEYED, PLOTTED, CHECKED, GRADES POSTED, R.O.W. CHECKED, STRUCTURE NOTATIONS CHECKED, NOTE BOOK, No.

K+E PLATE 1, PLAN-PROFILE KEUFFEL & ESSER CO.

SHEET 54 OF 435

SEP 21 2001

REMOVAL AND DISPOSAL OF GUARD RAIL
240+70, LT. - 249+70, RT.
250+50, RT. - E. CONN. 14+40, RT.

Relocate Mailbox Single Support
241+41 To 241+40

STEEL BEAM GUARD RAIL
241+00 - 253+00, RT.

SCARIFYING PAVEMENT
249+50 TO 252+00

DRILLING & BLASTING SOLID ROCK SUBGRADE
251+75 - 258+25

EROSION MATTING
241+50± - 243+00, LT.

CURVE DATA 14
Δ = 34°32'34.8" LT.
D = 6°00'00"
R = 954.93'
T = 296.91'
L = 575.72'
E = 45.09'
Bank = 0.07'/'

EXCAVATION OF SURFACES AND PAVEMENTS
M 251+70, R.T. TO EAST CONN. 11+90, RT.

CONSTRUCT DRIVE
241+35, LT. (GRAVEL)
243+91, LT. (GRAVEL)
244+86, LT. (GRAVEL)
248+55, LT. (PAVED)
246+00 LT (GRAVEL)
(Note: Leach Field Under Drive)

PLAN
0 50 100
Scale Feet

MATCH TO R.O.W. SHEET 31 OF 36 SHEETS STA 241+00

STA 241+10 TO STA 244+53 LT NEW 18"x64' RCCSP.064 OR CAAP .060 W/CSPES OR CAAPES @ INLET & OUTLET

STA 243+00 TO STA 244+05 NEW 6' UNDERDRAIN X 105'

STA 243+00 TO STA 243+70 LT NEW 6' WIDE X 70' SODDED GUTTER

STA 244+06 NEW 18"X64' RCCSP.064 OR CAAP.060

STA 244+55 REMOVE EXIST. 15" R.C.P.

STA 244+05 TO STA 244+66 LT NEW 6' UNDERDRAIN 61'

STA 244+05 TO STA 244+66 LT 6' WIDE X 61' SODDED GUTTER

STA 245+00 TO STA 246+00 LT (VARIES) X 50' DITCH (WIDTH SPECIAL)

STA 245+50 NEW 18"X 82' RCCSP.064 OR CAAP.060

STA 246+10 REMOVE EXIST. 15" R.C.P.

STA 246+88 REMOVE EXIST. 15" R.C.P.

STA 246+88 NEW 15"X68' RCCSP.064 OR CAAP.060

STA 248+50 REMOVE EXIST. 15" R.C.P.

STA 249+70 TO 251+50 LT. SPECIAL DITCH

STA 250+00 REMOVE EXIST. 12" C.M.P.

STA 251+00 NEW 18"X 82' RCCSP.064 OR CAAP.060 W/STONE FILL TYPE I OUTLET

STA 252+00 RT. REMOVE EXIST. 15" R.C.P.

STA 253+50 NEW 18"X 104' RCCSP.064 OR CAAP.060 R.C.P. CL. III W/ DITCH CHECK @ INLET & STONE FILL TYPE I @ OUTLET

MATCH TO R.O.W. SHEET 33 OF 36 SHEETS STA 254+00

USGEN NEW ENGLAND, INC. JOINED BY VERMONT LAND TRUST, INC.

BEAUDRY, CLEMENT L. & SUSIE M.

SZAREJKO, JOSEPH M. & BRENDA I.

BROOKS, FRANK W. & ELAINE M.

DOUGHERTY, MARY BETH REMOVE & RESET

CEDERGREN, JAMES W. & KAREN L.

MORSE, VIOLA B

HARRIMAN RESERVOIR

OVERFLOW CHANNEL

Exist Highway Boundary Survey

LINES SHOWN ON THIS PLAN AS EXISTING PROPERTY LINES (P/L) ARE BELIEVED TO BE ACCURATE BUT SHOULD NOT BE RELIED UPON FOR PURPOSES UNRELATED TO THE STATE OF VERMONT'S ACQUISITION OF LAND AND RIGHTS FOR THIS PROJECT.

PVI 247+00
ELEV. = 1510.90
L.VC. = 500'
r = +0.28'
SSD = 1729'

+0.95%

+0.54%

CUT TO FILL TRANSITION

CUT TO FILL TRANSITION

1540
1520
1500
1480
1460

241 242 243 244 245 246 247 248 249 250 251 252 253

1500
1490
1480

0 50 100
PROFILE SCALE IN FEET

FOR R.O.W. USE ONLY

264 REVISED

SEARSBURG — WILMINGTON
F 010 — 1 (18)
MAINLINE
R.O.W. SHEET 32 OF 36 SHEETS

PLATE 1. PLAN-PROFILE
KEUFFEL & ESSER CO.

SEP 21 2001 SHEET 55 OF 435

LINES SHOWN ON THIS PLAN AS EXISTING PROPERTY LINES (P/L) ARE BELIEVED TO BE ACCURATE BUT SHOULD NOT BE RELIED UPON FOR PURPOSES UNRELATED TO THE STATE OF VERMONT'S ACQUISITION OF LAND AND RIGHTS FOR THIS PROJECT.

DEMOLITION AND DISPOSAL OF BUILDING NO. 2 AT STA. 257+80, LT.

DRILLING AND BLASTING SOLID ROCK SUBGRADE
251+75 - 258+25
E. CONN. 10+20 - E. CONN. 11+75.

Relocate Mailboxes
Single Support
263+37 TO 263+49 LT.
259+80 RT. TO 258+95 LT.
NOTE: Relocate ONE OF THE TWO BOXES AT STA. 259+80 RT. TO 258+95 LT.
Parcel 19 STAYS in Place.

STA. 268+57 TO STA. 268+83 LT.
NEW 15"X30' CSP.064 w/CSPES
INLET & OUTLET

MATCH TO R.O.W. SHEET 35 OF 36 SHEETS STA. 269+00

MATCH TO R.O.W. SHEET 32 OF 36 SHEETS STA. 254+00

MORSE, VIOLA B.

MORSE, KENDALL H.

MOORE, JOHN L. & FLORENCE

JONES, ALBERT H. & HELEN M.

GREENE, BERT CYRIL

JOYCE, RICHARD M.

HRNCIAR, WILLIAM T. & SANDRA

FERRONE, LOUIS G. & JANICE ALLI-

KLIMAS

ZOBAL, ZDENEK

DRIVE (T)

CONST. EASE. (T)

Dirt Drive

Gravel Drive

Grave Drive

Iron Pipe

Stone Fireplace

Mobile Home

Septic Tank

Leach Field

Gravel Parking

Pole w/ Meter Box

Anchor

Yard

Woods

Spring

Well

Trees

Parking

Boat Ramp

Vermont Gas Sign

Exist. Highway Boundary

Exist. Pipe

Exist. Driveway

Exist. Culvert

Exist. Utility Poles

Exist. Guard Rail

Exist. Stone Wall

Exist. Fence

Exist. Cellar Hole

Exist. Building

Exist. Trees

Exist. Contours

Exist. Water Line

Exist. Gas Line

Exist. Overhead Wires

Exist. Underground Cable

Exist. Telephone Line

Exist. Electric Line

Exist. Sewer Line

Exist. Drainage Line

Exist. Septic Line

STA. 267+65 TO STA. 272+00, LT.
NEW 6"X 290' UNDERDRAIN

KLIMAS, GUSTAV & GLORIA V.

B.M. N-14
USGS Disk
U.S. Elev. 1513.23

NOTE:
MAINTAIN EXIST. PARKING AREA

Septic Tank
Leach Field

Ditch
DIT. (P)
Ft. Gas
Drive
NET 489
GMR G
Stone Retaining Wall 10"
Gas Gate
Fuel Well
Hedge
Stone H.W.
Anchor
Trees
Tree Line
Brace Pole
Pole
Poles
Sign
Conc. H.W.
Apron
Maple
Round
Cone
Trees
Trees
Trees

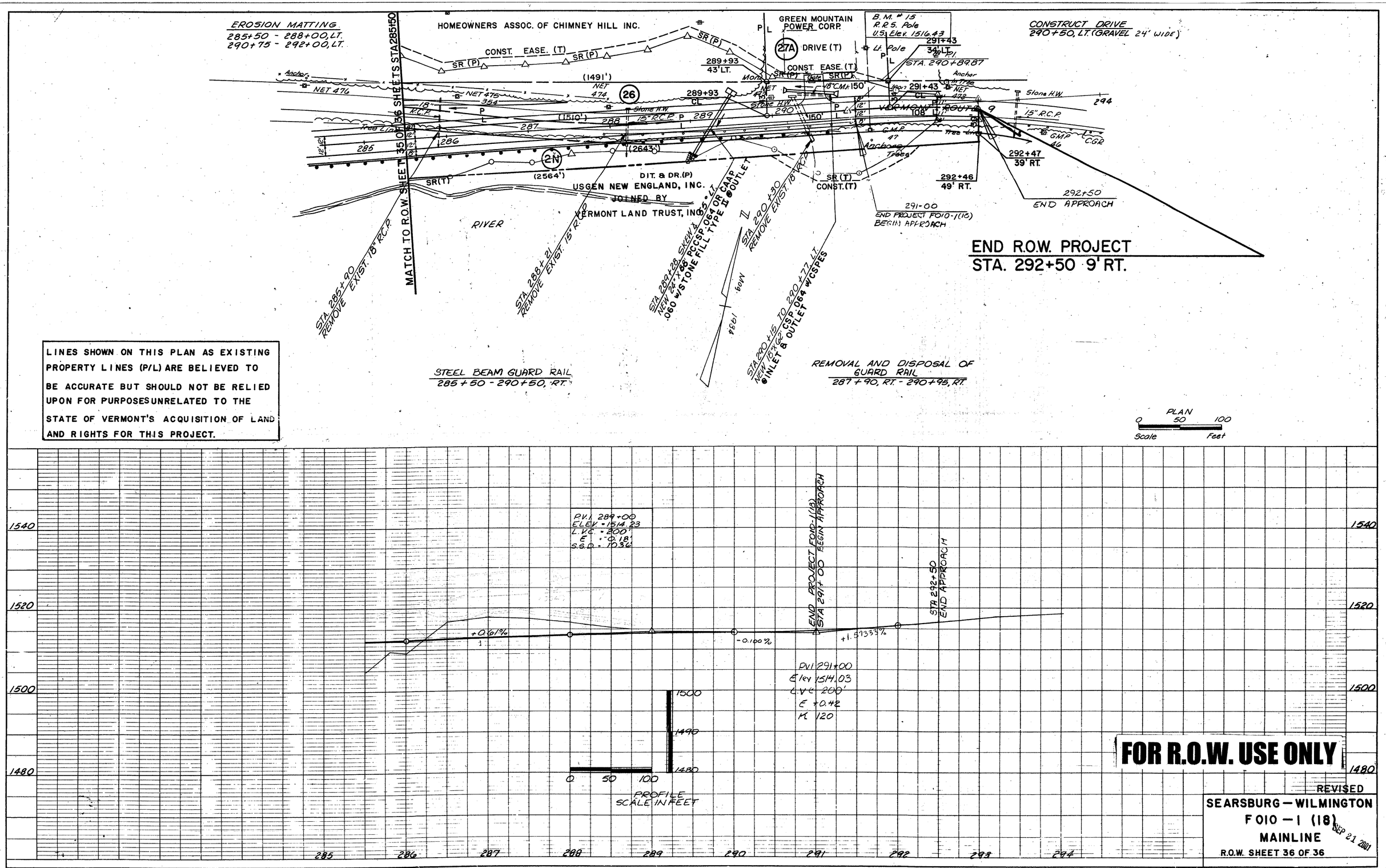

LINES SHOWN ON THIS PLAN AS EXISTING PROPERTY LINES (P/L) ARE BELIEVED TO BE ACCURATE BUT SHOULD NOT BE RELIED UPON FOR PURPOSES UNRELATED TO THE STATE OF VERMONT'S ACQUISITION OF LAND AND RIGHTS FOR THIS PROJECT.

FOR R.O.W. USE ONLY

REVISED

SEARSBURG — WILMINGTON
F010 — 1 (18)
MAINLINE
R.O.W. SHEET 36 OF 36

SEP 21 2001

PLAN: NOTE BOOK No. — SURVEYED — PLOTTED — ALIGNMENT CHECKED — RT. OF WAY CHECKED — BY — DATE

PROFILE: NOTE BOOK No. — SURVEYED — PLOTTED — GRADES CHECKED — B.M.'s NOTED — STRUCTURE NOTATIONS CHECKED — BY — DATE

K+E PLATE 1, PLAN-PROFILE KEUFFEL & ESSER CO.

SHEET 58 OF 435

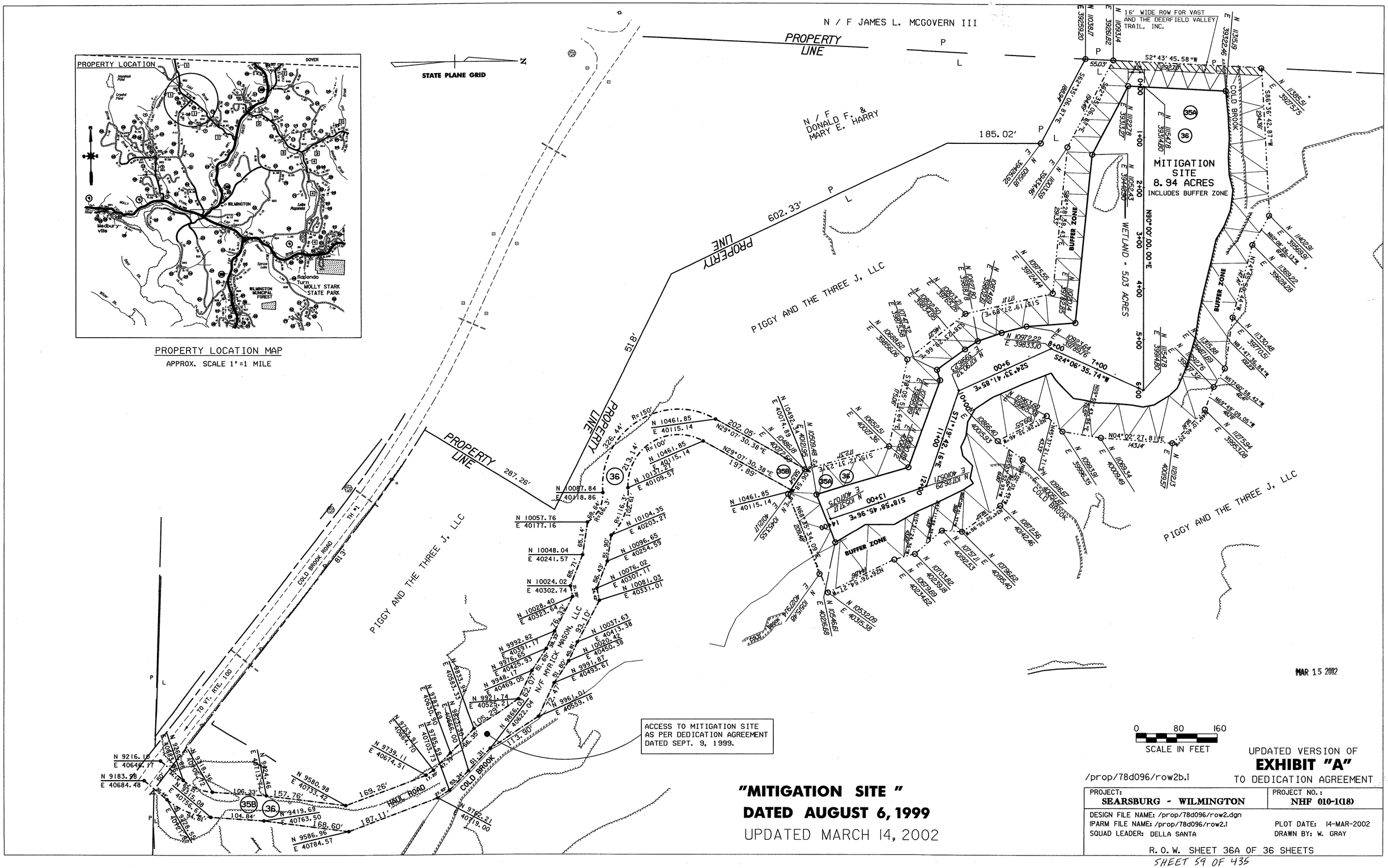

UPDATED VERSION OF
EXHIBIT "A"
TO DEDICATION AGREEMENT

/prop/78d096/row2b.i

"MITIGATION SITE"
DATED AUGUST 6, 1999
UPDATED MARCH 14, 2002

PROJECT: SEARSBURG - WILMINGTON	PROJECT NO.: NHF 010-1(18)
DESIGN FILE NAME: /prop/78d096/row2.dgn IPARM FILE NAME: /prop/78d096/row2.i SQUAD LEADER: DELLA SANTA	PLOT DATE: 14-MAR-2002 DRAWN BY: W. GRAY

R. O. W. SHEET 36A OF 36 SHEETS

CABLE GUARD RAIL
96+50 LT - 110+00 LT
TERMINATE AT 110+00 BY BURYING IT IN BERM.

EROSION MATTING
96+50 RT - 104+00 RT

REMOVAL AND DISPOSAL OF GUARD RAIL
105+64 LT - 107+94 LT
108+90 LT - 109+77 LT

CONSTRUCT DRIVE
98+94 RT (PAVED) 11' WIDTH

RELOCATE MAILBOX, SINGLE SUPPORT
98+89 LT - 99+00 LT

LANDSCAPING ITEMS FOR MR. ZUCKER'S PROPERTY
(PLANTING LOCATION TO BE DETERMINED BY PROPERTY OWNER AND RESIDENT ENGINEER)
TWO 1½'' CORTLAND APPLE TREE (SEMI-DWARF)
TWO 1½'' MCINTOSH APPLE TREE (SEMI-DWARF)
TWO 7 GAL. LIBERTY APPLE TREE (SEMI-DWARF)
TWO 7 GAL. RED DELICIOUS APPLE TREE (SEMI-DWARF)
THREE 7 GAL. 4 IN 1 APPLE TREE (SEMI-DWARF)
(CORTLAND, LODI, MCINTOSH AND SUMMER RED)

EXISTING CURVE DATA
Δ = 13°-05' RT
D = 1°
R = 5729.58'
T = 657.02'
L = 1308.33'
E = 37.55'
BANK: 0.021 FT./FT.

ML STA. 94+75
BEGIN APPROACH

POST 96+00

ML STA. 96+50
END APPROACH
BEGIN PROJECT
NHF 010-1(18)

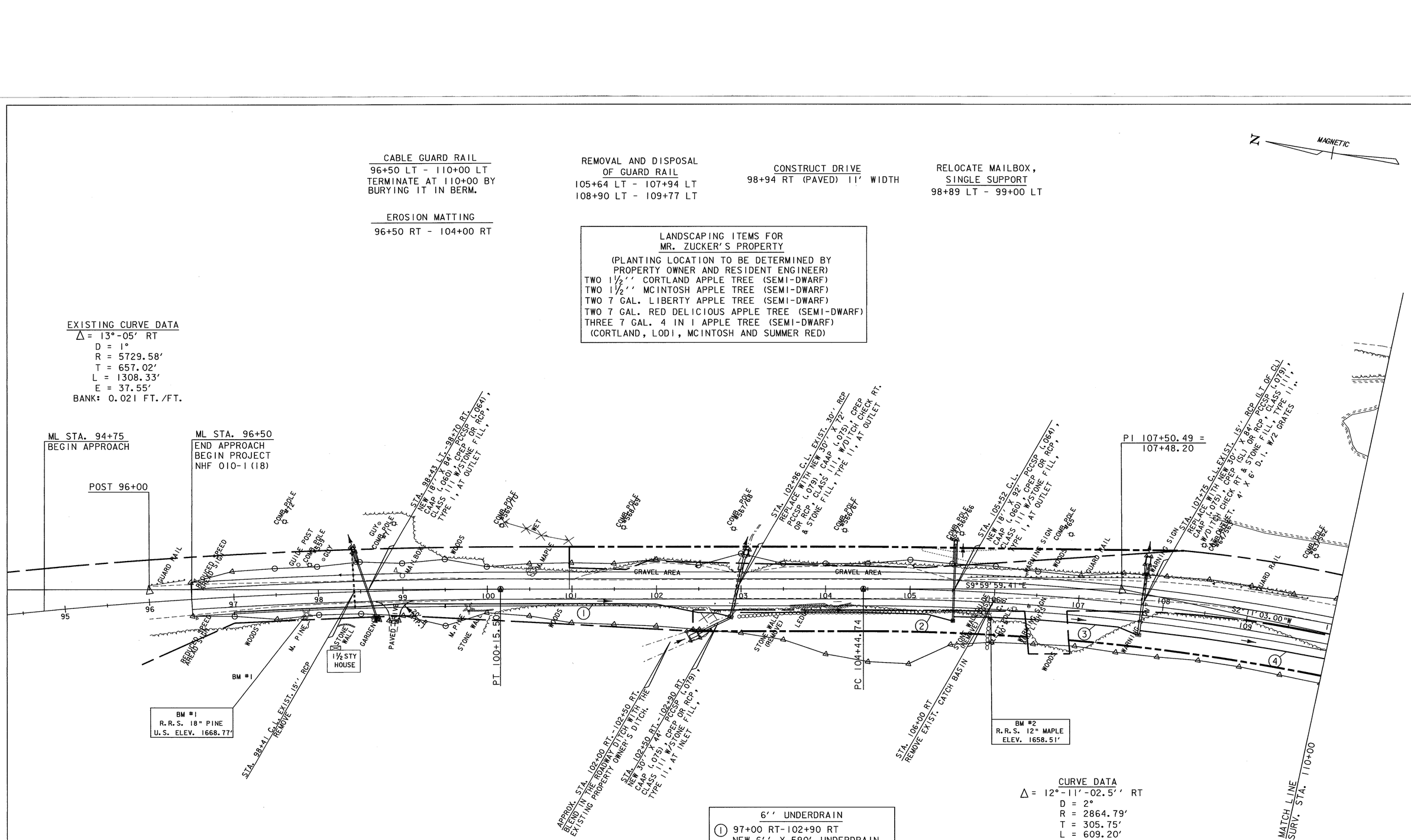

6'' UNDERDRAIN
(1) 97+00 RT-102+90 RT
NEW 6'' X 590' UNDERDRAIN
W/FB @ 97+00 RT & 99+50 RT

(2) 103+00 RT-105+52 RT
NEW 6'' X 252' UNDERDRAIN
W/FB @ 103+00 RT

(3) 105+54 RT-107+75 RT
NEW 6'' X 221' UNDERDRAIN
W/FB @ 105+54 RT

(4) 107+77 RT-110+20 RT
NEW 6'' X 243' UNDERDRAIN
W/FB @ 107+77 RT

CURVE DATA
Δ = 12°-11'-02.5'' RT
D = 2°
R = 2864.79'
T = 305.75'
L = 609.20'
E = 16.27'
BANK: 0.038 FT./FT.

NOTE: PROPOSED CENTERLINE FROM 96+50 TO 100+15.5 SHALL FOLLOW THE CENTERLINE OF THE EXISTING PAVEMENT.

0 50 100
SCALE IN FEET

PROJECT NAME: SEARSBURG - WILMINGTON
PROJECT NUMBER: NHF 010-1(18)
PLOT FILE NAME: DD096L01
PROJECT LEADER: DELLA SANTA
DESIGN FILE: 78D096/DESIGN/DD096CNU1.DGN
PLOT DATE: 22-FEB-2002
DRAWN BY: SQUAD B
SHEET 61 OF 435

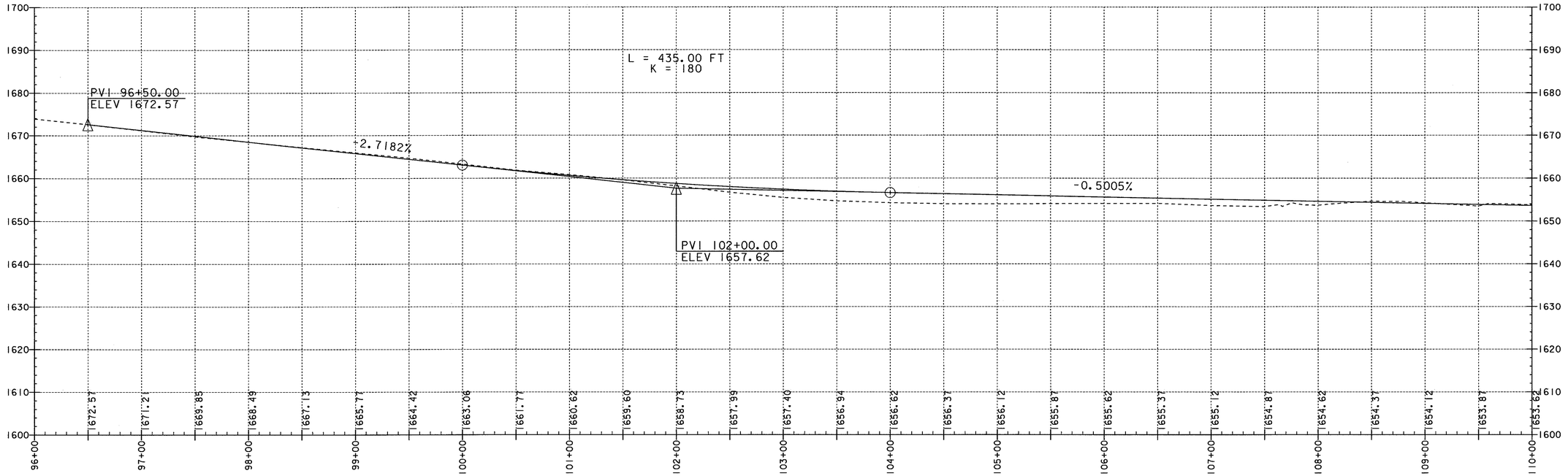

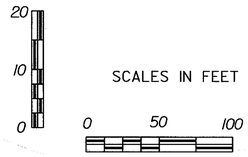

PROJECT NAME:	SEARSBURG - WILMINGTON
PROJECT NUMBER:	NHF 010-1(18)
FILE NAME: DD096P01	PLOT DATE: 04-JAN-2002
PROJECT LEADER: DELLA SANTA	DRAWN BY: SQUAD B
DESIGN FILE: 78D096/DESIGN/DD096CWRK.DGN	
	SHEET 62 OF 435

CONSTRUCT DRIVE
110+47 RT (GRAVEL)

TREATED TIMBER CURB
REV. 113+00 LT-REV. 118+61 LT.
REV. 121+09 LT-REV. 124+83 LT.
REV. 124+50 RT-REV. 125+00 RT.

STEEL BEAM GUARD RAIL
110+75 LT - 117+66.5 LT
BURY THE BEGINNING IN BERM (NO TERMINAL)
121+22 LT - 123+24.5 LT
113+50 RT - 118+54.5 RT
122+10 RT - 125+00 RT

GUARD RAIL APPROACH SECTION, NETC 2 RAIL (MOD.)
123+24.5 LT - 123+43 LT

MANUFACTURED TERMINAL SECTION
BEGIN AT 113+12.5 RT

GUARD RAIL APPROACH SECTION, NETC 2 RAIL
117+66.5 LT - 117+96.5 LT
120+92 LT -121+22 LT
118+54.5 RT - 118+83 RT
121+81 RT - 122+10 RT

BRIDGE RAIL-NETC 2 RAIL
117+96.5 LT - 120+92 LT
118+83 RT - 121+81 RT

SNOW FENCE
115+00 RT - 116+25 RT
"NO DISTURBANCE AREA SEE SPECIAL PROVISIONS"

CURVE DATA
Δ= 41°-45'-47.87'' LT
D = 4°-30'
R = 1273.24'
T = 485.74'
L = 928.07'
E = 89.51'
BANK: 0.067 FT./FT.

REMOVING & RESETTING PROPERTY MARKER (MOD.)
116+90 RT. MOVE TO 117+00 RT.
(MARBLE MEMORIAL MONUMENT)

SCARIFYING PAVEMENT
113+50 - 117+00 CL
124+50 - 125+00 CL

EXCAVATION OF SURFACES AND PAVEMENTS
120+00 LT. - 121+25 LT.
(AREA TO BE TOPSOILED AND SEEDED)

EROSION MATTING
112+00 RT. - 115+50 RT.
116+50 RT. - 118+50 RT.
121+50 LT. - 123+00 LT.

GATE FOR CHAIN-LINK FENCE, 6 FEET
120+65+-, 120'+/- LT
(DOUBLE 8 FOOT WIDE GATE---REFER TO STANDARDS F-2 AND F-4.)

REMOVAL & DISPOSAL OF GUARD RAIL
110+90 LT - 115+85 LT
115+36 RT - 115+88 RT
116+13 LT - 118+29 LT
116+16 RT - 118+44 LT
120+12 LT - 124+07 LT

N MAGNETIC

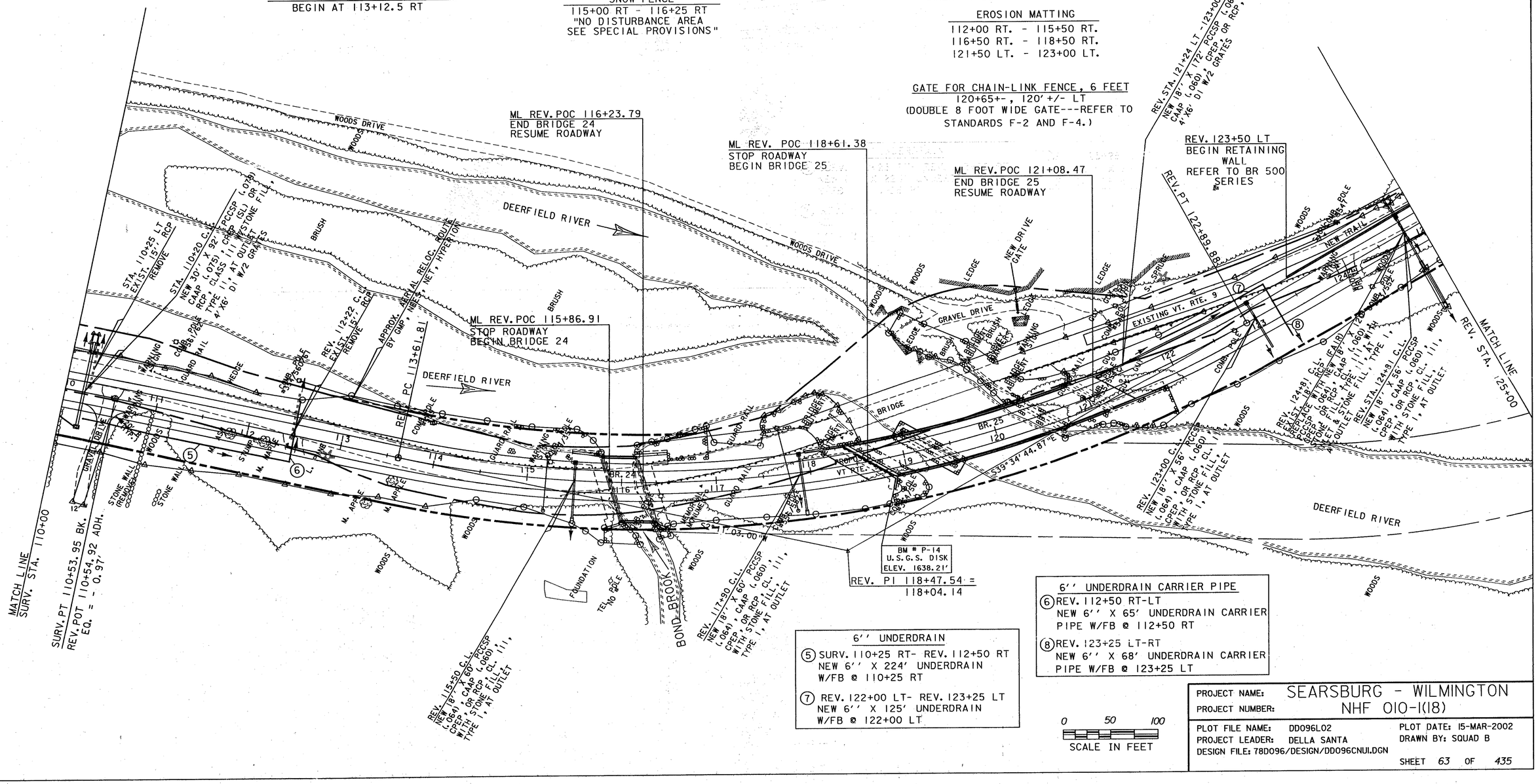

PROJECT NAME:	SEARSBURG - WILMINGTON
PROJECT NUMBER:	NHF 010-1(18)
PLOT FILE NAME:	DD096L02
PROJECT LEADER:	DELLA SANTA
DESIGN FILE:	78D096/DESIGN/DD096CNUI.DGN
PLOT DATE:	15-MAR-2002
DRAWN BY:	SQUAD B

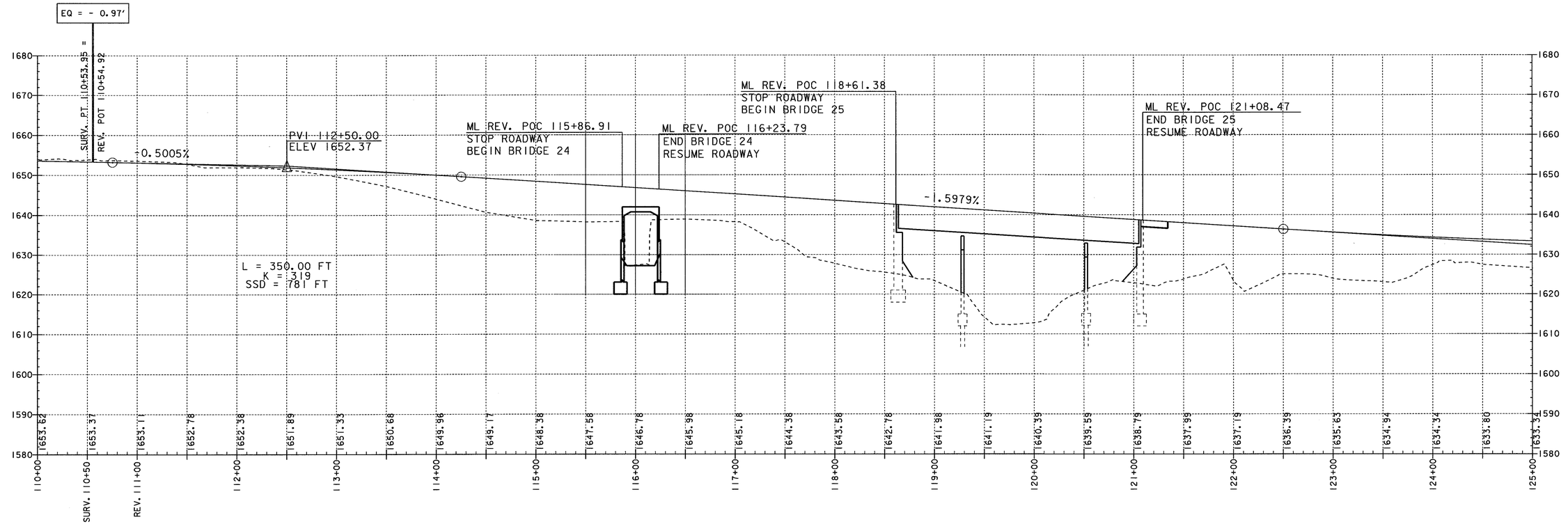

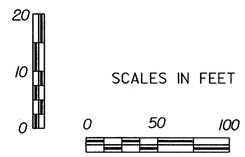

PROJECT NAME:	SEARSBURG - WILMINGTON
PROJECT NUMBER:	NHF 010-1(18)
FILE NAME: DD096P02	PLOT DATE: 15-FEB-2002
PROJECT LEADER: DELLA SANTA	DRAWN BY: SQUAD B
DESIGN FILE: 78D096/DESIGN/DD096CWRK.DGN	
	SHEET 64 OF 435

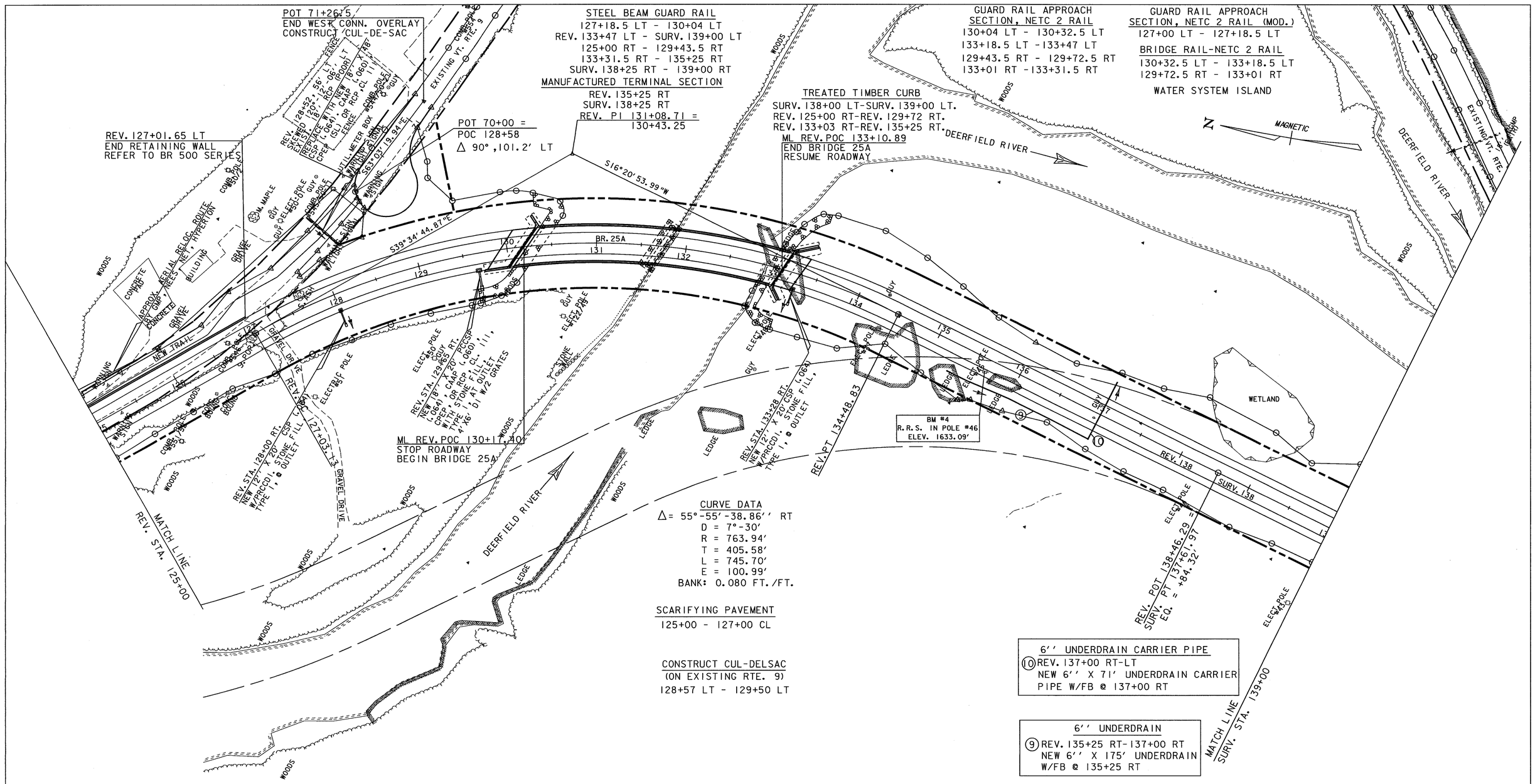

WATER SYSTEM ISLAND

THE WATER SYSTEM ISLAND TO THE EAST OF THE NEW ALIGNMENT AND BETWEEN THE TWO BRANCHES OF THE DEERFIELD RIVER SHALL BE CONSIDERED A ''NO DISTURBANCE AREA'' AND, THEREFORE, NO CONSTRUCTION ACTIVITY SHALL BE CONDUCTED ON THIS ISLAND.

0 50 100
SCALE IN FEET

PROJECT NAME:	SEARSBURG - WILMINGTON
PROJECT NUMBER:	NHF 010-1(18)
PLOT FILE NAME: DD096L03	PLOT DATE: 26-FEB-2002
PROJECT LEADER: DELLA SANTA	DRAWN BY: SQUAD B
DESIGN FILE: 78D096/DESIGN/DD096CNUI.DGN	SHEET 65 OF 435

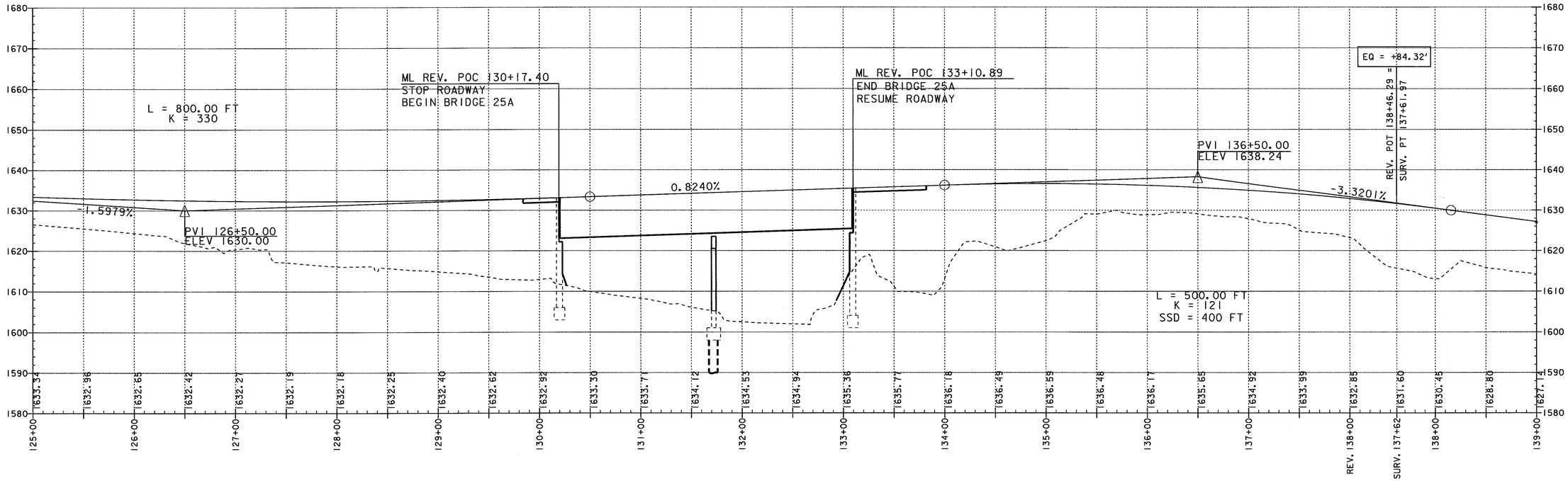

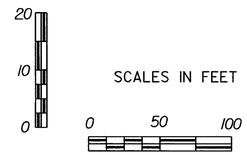

PROJECT NAME:	SEARSBURG - WILMINGTON
PROJECT NUMBER:	NHF 010-1(18)
FILE NAME: DD096P03	PLOT DATE: 21-FEB-2002
PROJECT LEADER: DELLA SANTA	DRAWN BY: SQUAD B
DESIGN FILE: 78D096/DESIGN/DD096CWRK.DGN	

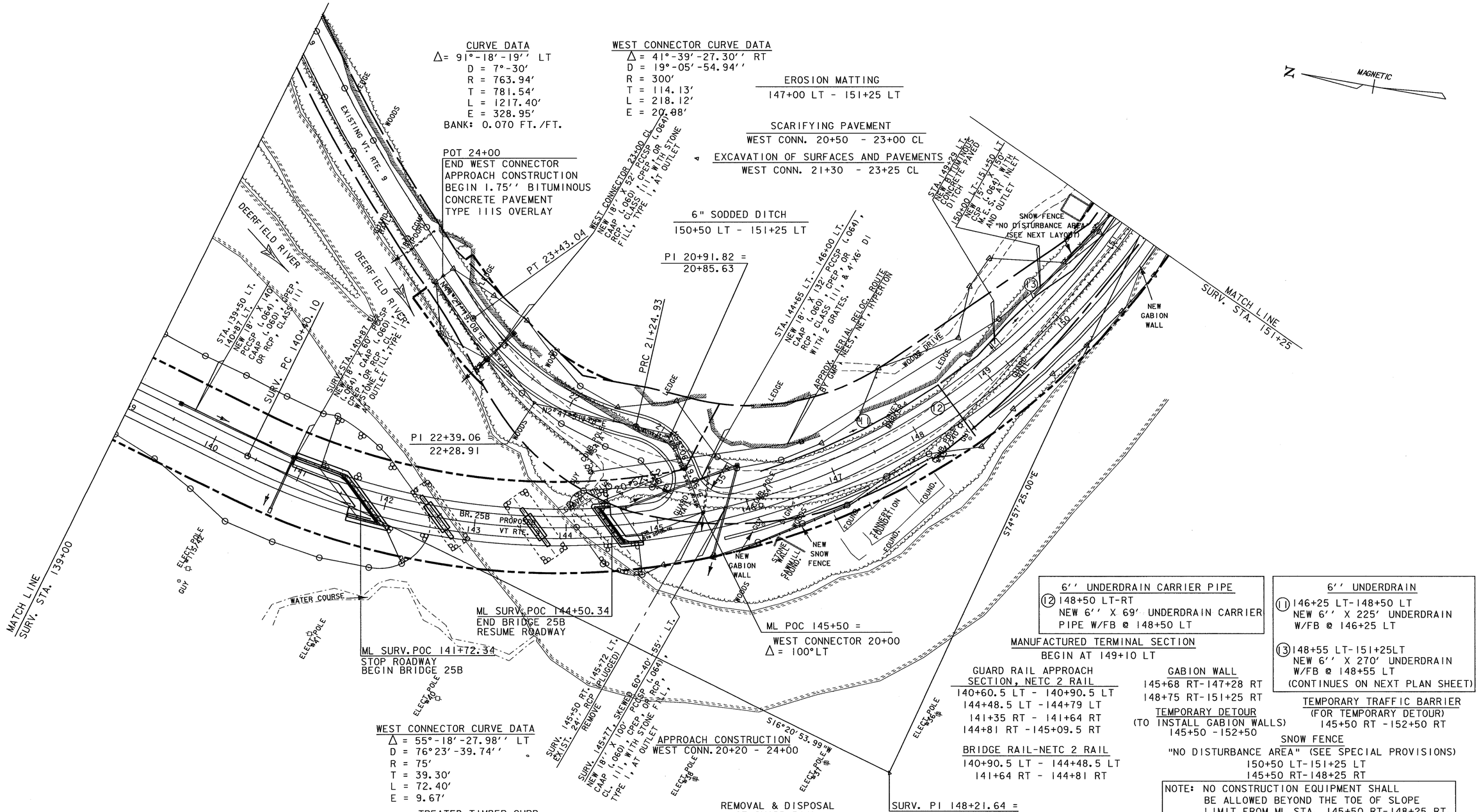

6'' UNDERDRAIN CARRIER PIPE

(12) 148+50 LT-RT
NEW 6'' X 69' UNDERDRAIN CARRIER
PIPE W/FB @ 148+50 LT

6'' UNDERDRAIN

(11) 146+25 LT-148+50 LT
NEW 6'' X 225' UNDERDRAIN
W/FB @ 146+25 LT

(13) 148+55 LT-151+25LT
NEW 6'' X 270' UNDERDRAIN
W/FB @ 148+55 LT
(CONTINUES ON NEXT PLAN SHEET)

MANUFACTURED TERMINAL SECTION
BEGIN AT 149+10 LT

GUARD RAIL APPROACH SECTION, NETC 2 RAIL
140+60.5 LT - 140+90.5 LT
144+48.5 LT -144+79 LT
141+35 RT - 141+64 RT
144+81 RT -145+09.5 RT

BRIDGE RAIL-NETC 2 RAIL
140+90.5 LT - 144+48.5 LT
141+64 RT - 144+81 RT

GABION WALL
145+68 RT-147+28 RT
148+75 RT-151+25 RT

TEMPORARY DETOUR
(TO INSTALL GABION WALLS)
145+50 -152+50

TEMPORARY TRAFFIC BARRIER
(FOR TEMPORARY DETOUR)
145+50 RT -152+50 RT

SNOW FENCE
"NO DISTURBANCE AREA" (SEE SPECIAL PROVISIONS)
150+90.5 LT-151+25 LT
145+50 RT-148+25 RT

NOTE: NO CONSTRUCTION EQUIPMENT SHALL BE ALLOWED BEYOND THE TOE OF SLOPE LIMIT FROM ML STA. 145+50 RT-148+25 RT. AND STA. 150+50 LT-151+25 LT.

WATER SYSTEM ISLAND

THE WATER SYSTEM ISLAND TO THE EAST OF THE NEW ALIGNMENT AND BETWEEN THE TWO BRANCHES OF THE DEERFIELD RIVER SHALL BE CONSIDERED A ''NO DISTURBANCE AREA'' AND, THEREFORE, NO CONSTRUCTION ACTIVITY SHALL BE CONDUCTED ON THIS ISLAND.

PROJECT NAME: SEARSBURG - WILMINGTON
PROJECT NUMBER: NHF 010-1(18)

PLOT FILE NAME: DD096L04
PROJECT LEADER: DELLA SANTA
DESIGN FILE: 78D096/DESIGN/DD096CNUI.DGN
PLOT DATE: 26-FEB-2002
DRAWN BY: SQUAD B

WEST CONNECTOR PROFILE

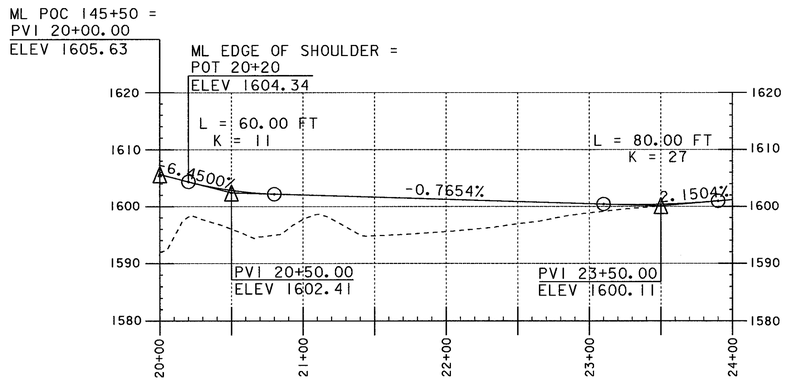

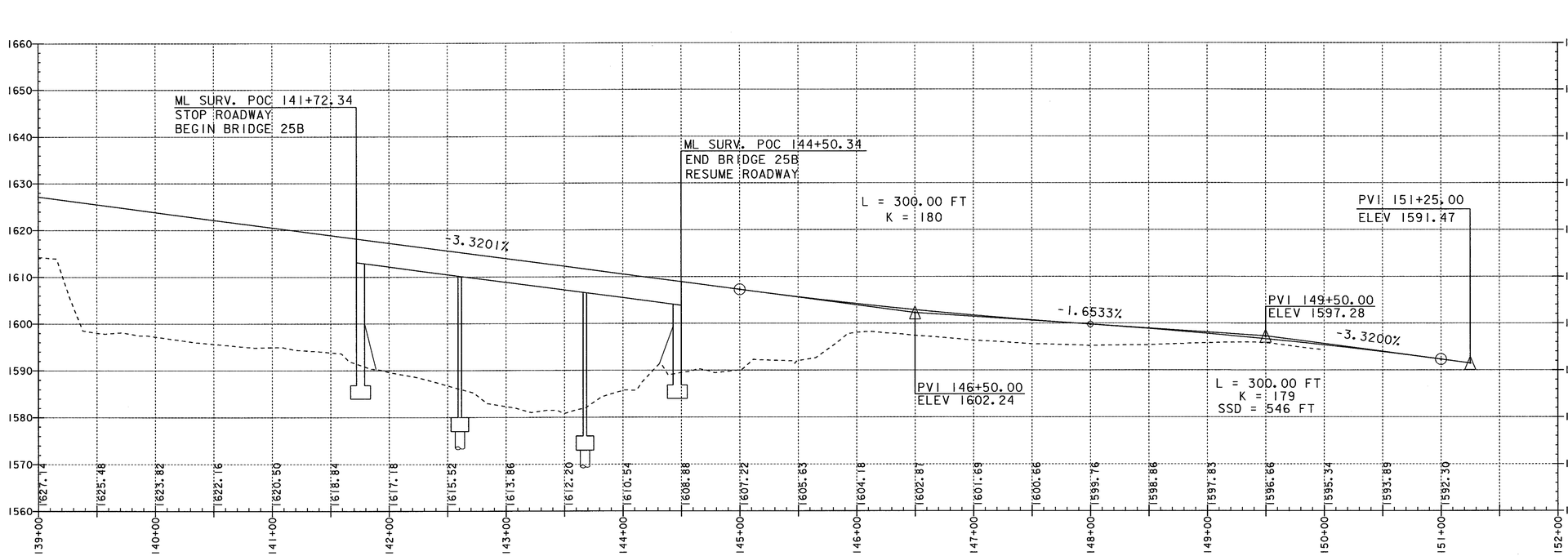

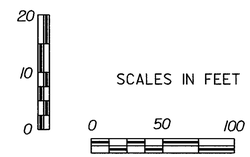

PROJECT NAME:	SEARSBURG - WILMINGTON
PROJECT NUMBER:	NHF 010-1(18)
FILE NAME: DD096P04	PLOT DATE: 15-FEB-2002
PROJECT LEADER: DELLA SANTA	DRAWN BY: SQUAD B
DESIGN FILE: 78D096/DESIGN/DD096CWRK.DGN	

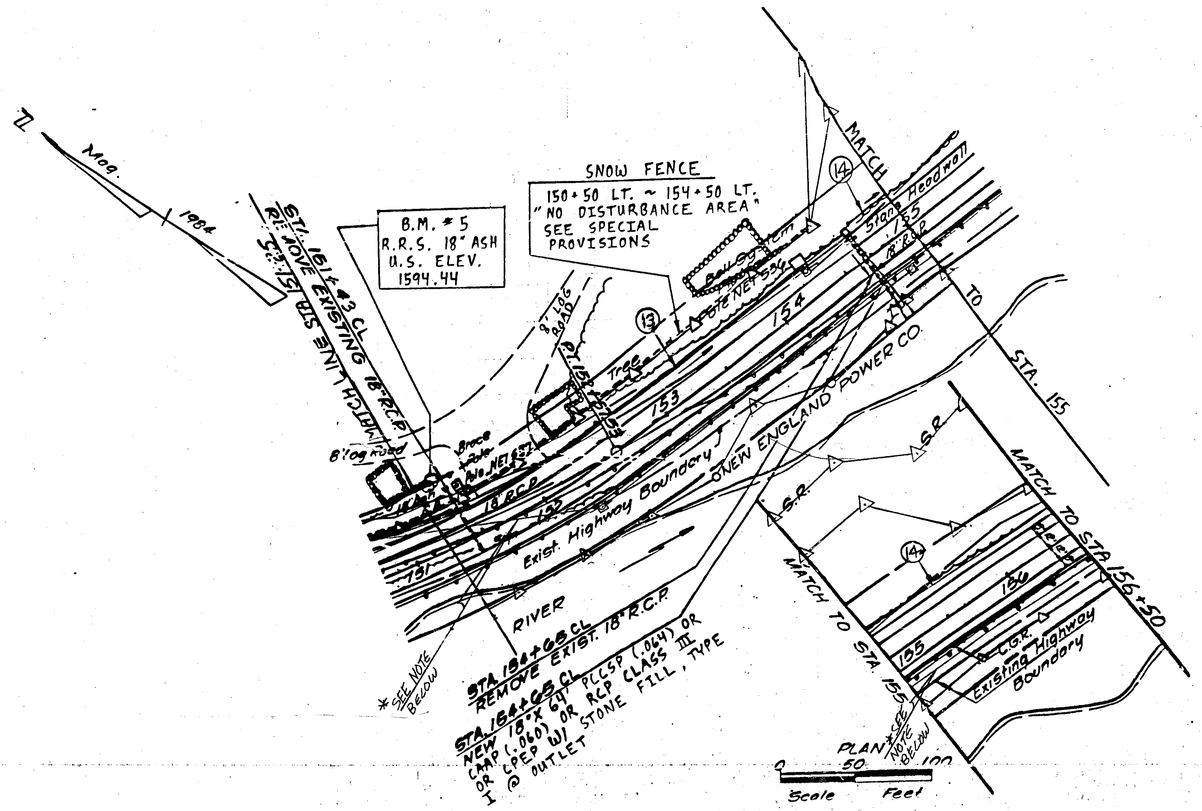

6'' UNDERDRAIN
(13) 151+25 LT- 154+65 LT NEW 6'' X 340' UNDERDRAIN W/FB @ 151+85 LT (CONTINUES FROM PREVIOUS PLAN SHEET)
(14) 154+70 LT- 157+00LT NEW 6'' X 230' UNDERDRAIN W/FB @ 154+70 LT (CONTINUES ON NEXT PLAN SHEET)
NOTE: ON NEXT PLAN SHEET THE UNDERDRAIN NUMBERING SKIPS (15) AND (16) AND RESUMES WITH (17)

GABION WALL
STA. 151+25 RT - 152+25 RT

REMOVAL AND DISPOSAL
OF GUARD RAIL
STA. 151+25 LT - 156+50 RT

STEEL BEAM GUARD RAIL
STA. 151+25 LT - 156+50 RT

EROSION MATTING
STA. 151+25 LT - 155+50 LT

*NOTE: APPROX. AERIAL RELOC. ROUTE
BY GMP, NEES, NET, HYPERION

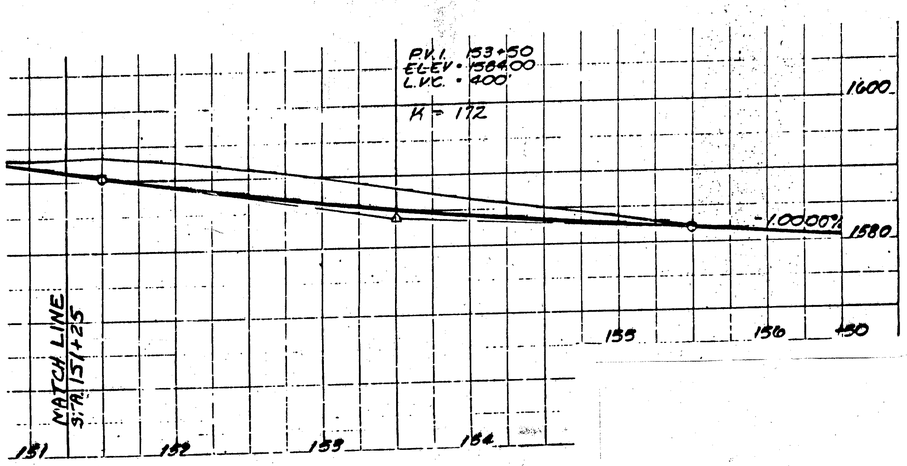

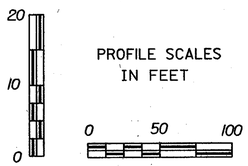

NOTE: NO CONSTRUCTION EQUIPMENT SHALL BE ALLOWED BEYOND THE TOE OF SLOPE LIMIT FROM ML STA. 151+25 LT-154+50 LT.

PROJECT NAME: SEARSBURG - WILMINGTON
PROJECT NUMBER: NHF 010-1(18)

PLOT FILE NAME: DD096L05
PROJECT LEADER: DELLA SANTA
DESIGN FILE: 78D096/DESIGN/DD096CBR.DGN
PLOT DATE: 06-DEC-2001
DRAWN BY: SQUAD B

REMOVAL AND DISPOSAL OF GUARD RAIL
161+10, LT. – 164+95, RT.
156+50 RT. – 160+45 RT

CONSTRUCT DRIVE
167+41, LT. (GRAVEL) 28' W
169+98 LT. (GRAVEL) 16' W
172+12, LT. (GRAVEL) 16' W

CONSTRUCT TURNOUT
170+80 – 172+50 Rt (GRAVEL) 14' W

REMOVAL AND DISPOSAL OF GUIDE POSTS
165+10, RT. – 167+10, RT.

TREATED TIMBER CURB
156+50 RT. – 162+00 RT.

Magnetic 1984

STA 158+70 ℄ NEW 24"X68' PCCSP(.064) OR CAAP(.060) W/ DITCH OR CPEP INLET CHECK @

STA 161+50 ℄ NEW 8'X100' PCCSP(.064) OR CAAP(.060) CLASS III OR RCP CPEP (SL) W/ STONE FILL, TYPE I @ OUTLET

STA 163+65 ℄ NEW 30"X 72' PCCSP (.079) OR RCP CLASS III OR CPEP W/ STONE DITCH LT. W/ WATERFALL AND

STA 164+25 ℄ REMOVE EXISTING 24" R.C.P.

BM #6
RR9 12" Poplar
US Elev. 1570.83

167+41 LT. NEW 15"X68' CSP(.064) OR RCP (CLASS III OR CPEP (SL)

15NF Ho.

172+12 LT. NEW 15"X52 CSP(.064) OR RCP CLASS III W/ CSPES @ INLET AND OUTLET

APPROX. LOCATION CAPPED SEWER INBOUND SYSTEM

P.C. 170 + 71.74

CHARLENE HULTEN

GMP

15NF Ho.

MATCH TO SHEET 3 OF 3

PI 159+07.63 = 159+03.12

S.R.

Trees

Tree Line

Pole 334

VERMONT ROUTE 9

Stone Wall

12" Poplar

Pipe

Stone Hdwl.

Wood G.P.s.

Exist. Highway Boundary

Conc. D.I.

2 RCP

Pole 533

Pole 534

Pole 535

Pole 536

CGP

#534

#535

#536

#532

#530

#531

Gravel Drive

Anchor

Guy

Wet

Garage

Concrete Sewer

18" R.C.P.

NEW ENGLAND POWER CO.

CHARLENE HULTEN

DEERFIELD RIVER

P.T. 161+44.93

159+00 RT. NEW 12" x 141' CSP (.064) W/ PRCCDI

162+00 RT. NEW 12" x 28' CSP (.064) W/ PRCCDI

STA 158+70 ℄ REMOVE EXISTING 24" RCP

STA 167+65 ℄ REMOVE EXISTING 15" RCP

STA 168+00 ℄ NEW 30"X 80' PCCSP (.079) OR CAAP (.075) OR CPEP (SL) W/ CSPES @ INLET AND STONE FILL, TYPE II @ OUTLET

STA 171+70 ℄ REMOVE EXIST. 18" R.C.P.

CURVE DATA 6
Δ = 19°09'51.0" RT.
D = 4°00'00"
R = 1432.40'
T = 241.81'
L = 479.11'
E = 20.27'
Bank = 0.063'/'

DRILLING AND BLASTING SOLID ROCK SUBGRADE
160+00 – 164+50

APPROX AERIAL RELOC. ROUTE BY GMP NEES, NET. HYPERION

STEEL BEAM GUARD RAIL
156+50 – 170+42.5 RT.

MANUFACTURED TERMINAL SECTION
BEGIN AT 170+42.5 RT.

PLAN
0 50 100
Scale Feet

6" UNDERDRAIN

(18) 160+50 LT. – 161+50 LT.
NEW 6" x 100' UNDERDRAIN
W/ FB @ 160+50 LT.

(19) 161+00 RT. – 163+50 RT.
NEW 6" x 250' UNDERDRAIN
W/ FB @ 161+00 RT.

(20) 161+55 LT. – 163+65 LT.
NEW 6" x 210' UNDERDRAIN
W/ FB @ 161+55 LT.

(22) 163+70 LT. – 167+00 LT.
NEW 6" x 330' UNDERDRAIN
W/ FB @ 163+70 LT. AND 165+35 LT.

(24) 167+02 LT. – 169+50 LT.
NEW 6" x 248' UNDERDRAIN
W/ FB @ 167+02 LT.

(26) 169+52 LT. – 173+50 LT.
NEW 6" x 398' UNDERDRAIN
W/ FB @ 169+52 LT. AND 171+50 LT.

6" UNDERDRAIN CARRIER PIPE

(17) 157+00 LT. – RT.
NEW 6" x 57' UNDERDRAIN CARRIER PIPE W/ FB @ 157+00 LT.

(21) 163+50 RT.
NEW 6" x 13' UNDERDRAIN CARRIER PIPE W/ FB @ 163+50 RT.

(23) 167+00 LT. – RT.
NEW 6" x 64' UNDERDRAIN CARRIER PIPE W/ FB @ 167+00 LT.

(25) 169+50 LT. – RT.
NEW 6" x 81' UNDERDRAIN CARRIER PIPE W/ FB @ 169+50 LT.

P.V.I. 172+50
ELEV = 1565.00
L.V.C. = 500'
S.S.D. = 915

-1.0000%

-1.0000%

1580
1560
1540
1520

1550
1540
1530
0 50 100
PROFILE
SCALE IN FEET

156+50 157 158 159 160 161 162 163 164 165 166 167 168 169 170 171 172

PLAN
SURVEYED
PLOTTED
NOTE BOOK
No.
AUTOMATIC CHECKED
PLANS CHECKED
E. W. L. NOTES
STRUCTURE NOTATIONS CHECKED
BY
DATE

PROFILE
SURVEYED
PLOTTED
NOTE BOOK
No.
AUTOMATIC CHECKED
PLANS CHECKED
E. W. L. NOTES
STRUCTURE NOTATIONS CHECKED
BY
DATE

SEARSBURG – WILMINGTON
F 010 – 1 (18)
MAINLINE
SHEET 70 OF 435

K&E PLATE 1, PLAN-PROFILE
KEUFFEL & ESSER CO.
48 7024 MADE IN U.S.A.

CURVE DATA 7
Δ = 27°52'00" LT.
D = 5°00'00"
R = 1145.92'
T = 284.29'
L = 557.34'
E = 34.74'
Bank = 0.071%

CONSTRUCT TURNOUT
172+50 - 175+62.5 Rt (GRAVEL) 14'W

REMOVING AND RESETTING FENCE
172+50, LT. - 175+00±, LT.

EROSION MATTING
178+50 - 177+50 LT.

SCARIFYING PAVEMENT
174+50 TO 176+75

CONSTRUCT DRIVE
175+15, LT. (GRAVEL) 20'W
178+35, LT. (GRAVEL) 16'W
183+40, LT (PAVED) 24'W
185+40, LT (GRAVEL) 30'W

DEMOLITION AND DISPOSAL
Pit OF BUILDING NO.1 AT
STA. 184+40, LT.

JEFFREY MAY
GREEN MTN. NAT. FOREST (U.S.A.)
RAYMOND PENSON
ROBERT EWER
WM. E. DAILEY, INC.
CHARLENE HULTEN
PETER GOULLE, JR.
Gravel Drive
Gravel Road
Existing Highway Boundary
Tree Line
Trees
Overhead Power Lines
Power Pole
Truck Scales
Apron
Gravel Pit
Anchor
Iron in Mon.
Pipe
Hdwl.
Mon.
Conc. I.P.
Conc. D.I.
18" R.C.P.
15" R.C.P.
2" Spruce
ROUTE 9
DEERFIELD RIVER
SHEET 30
SHEET 36
MATCH
MATCH

B.M. # 7
R.R.S. 20" Oak
U.S. Elev. 1351.68

PI 173+56.03 =
173+44.79

PI 181+56.37 =
181+55.43

STA. 173+00 CL
NEW 18"x 176' PCCSR(064) III OR CAP(064) OR RCP CL CSPES OR CAPES @ INLET OR CLEP(SL) w/ INLET w/ STONE FILL, TYPE I @ OUTLET

STA. 174+00 RT.
REMOVE EXIST. 15" R.C.P.

STA. 177+40 RT.
REMOVE EXIST. 15" R.C.P.
NEW 12" x 22' CSP (064) w/ PRCLOI (TO BE LOCATED IN FIELD)

STA. 178+35 LT.
NEW 24"x 68' CSP(064) OR RCP CLASS III OR CLEP(SL) w/ CSPES OR CLEP @ INLET

STA. 178+80 CL
NEW 30"x 180' PCCSR(078) III OR CAP(078) OR RCP CL CSPES OR CLEP(SL) w/ INLET w/ STONE FILL, TYPE II @ OUTLET

STA. 179+20 CL
REMOVE EXIST. 24" R.C.P.

APPROX. AERIAL RELOC. ROUTE 9 BY G.M.R.NESS, NET HYPER 10%

NEW 12" x 41' CSP (064) w/ PRCLOI w/ 1-10° EL.80W

STA. 182+00 RT.

STA. 183+70 CL
REMOVE EXIST. 18" R.C.P.

EQUALITY +0.48'
PT 184+30.24 BK =
184+29.76 AHD

STA. 186+90 RT.
REMOVE EXIST. 15" R.C.P.

RELOCATE MAILBOX, SINGLE SUPPORT
172+42 LT. TO 172+45 LT.

REMOVAL + DISPOSAL OF GUARD RAIL
186+05 RT. ~ 187+00 RT.

STEEL BEAM GUARD RAIL
176+00 - 187+00. RT.

MANUFACTURED TERMINAL SECTION
END AT 176+00 RT.

CURVE DATA 8
Δ = 8°13'48.5" RT.
D = 1°30'00"
R = 3819.72'
T = 274.81'
L = 548.68'
E = 9.87'
Bank = 0.030%

TREATED TIMBER CURB
178+50 RT. - 185+00 RT.

PLAN
0 50 100
Scale Feet

6" UNDERDRAIN

(28) 173+52 LT. ~ 177+50 LT.
NEW 6" x 398' UNDERDRAIN
W/ FB @ 173+52 LT. AND
175+50 LT.

(30) 177+52 RT. ~ 178+77 RT.
NEW 6" x 125' UNDERDRAIN
W/ FB @ 177+52 RT.

(35) 184+52 RT. ~ 188+25 RT.
NEW 6" x 373' UNDERDRAIN
W/ FB @ 184+52 RT. AND
186+39 RT.

(32) 178+83 RT. ~ 181+00 RT.
NEW 6" x 217' UNDERDRAIN
W/ FB @ 178+83 RT.

(34) 181+00 RT. ~ 184+50 RT.
NEW 6" x 350' UNDERDRAIN
W/ FB @ 182+75 RT. AND
184+50 RT.

(36) 185+00 LT. ~ 187+00 LT.
NEW 6" x 200' UNDERDRAIN
W/ FB @ 185+00 LT.

6" UNDERDRAIN CARRIER PIPE

(27) 173+50 LT. - RT.
NEW 6" x 101' UNDERDRAIN
CARRIER PIPE W/ FB
@ 173+50 LT.

(29) 177+50 LT. RT.
NEW 6" x 73' UNDERDRAIN
CARRIER PIPE W/
FB @ 177+50 LT.

(31) 178+77 RT.
NEW 6" x 12' UNDERDRAIN
CARRIER PIPE W/ FB
@ 178+77 RT.

(33) 181+00 RT.
NEW 6" x 28' UNDERDRAIN
CARRIER PIPE W/ FB
@ 181+00 RT.

(37) 187+00 LT.
NEW 6" x 15' UNDERDRAIN
CARRIER PIPE W/ FB
@ 187+00 LT.

P.V.I. 172+50
ELEV. = 1565.00
L.V.C. = 500'
S.S.D. = 915'

P.V.I. 178+75
ELEV. = 1552.50
L.V.C. = 450.00'
K = 150

P.V.I. 185+50
ELEV. = 1559.25
L.V.C. = 600.00'
S.S.D. = 519'

-2.0000%
+0.9993 %
-1.9600%

1580
1560
1540
1520
1500

172+50 173 174 175 176 177 178 179 180 181 182 183 184 185 186 187

1540
1530
1520
0 50 100
PROFILE
SCALE IN FEET

EQUALITY +0.48'
184+30.24 BK =
184+29.76 AHD

PLAN
SURVEYED
PLOTTED
NOTE BOOK
No.
GRADES CHECKED
ALIGNMENT CHECKED
RT. OF WAY CHECKED
STRUCTURE NOTATIONS CHECKED
BY
DATE

PROFILE
SURVEYED
PLOTTED
NOTE BOOK
No.
GRADES CHECKED
ALIGNMENT CHECKED
STRUCTURE NOTATIONS CHECKED
BY
DATE

SEARSBURG — WILMINGTON
F 010 — 1 (18)
MAINLINE
SHEET 71 OF 435

K&E PLATE 1. PLAN PROFILE
KEUFFEL & ESSER CO.
43 7024 MADE IN U.S.A.

CONSTRUCT DRIVE
192+45, LT. (GRAVEL) 12' W
195+42, LT. (GRAVEL) 16' W
198+35, LT. (GRAVEL 12' W)

CONSTRUCT TURNOUT
188+35 ~ 192+00 Rt. (Gravel) Varies up to 30' W

CURVE DATA 9
Δ = 11°04'12.0" LT.
D = 2°00'00"
R = 2864.79'
T = 277.61'
L = 553.50'
E = 13.42'
Bank = 0.038'/'

EROSION MATTING
194+00 - 199+50 LT

REMOVAL AND DISPOSAL OF GUARD RAIL
187+00 RT. - 194+00, RT.

Magnetic 1984

STA. 192+02 CL NEW 18"X10" PCCSP(.064)OR CAAP (.060) OR RCP CL III OR CAAPES OR CPEP(SL) W/ CSPES OR CAAPES @ INLET & DITCH W/ STONE FILL, TYPE I @ OUTLET W/ STONE FILL, TYPE I

STA. 192+00 LT. ~ 192+00 LT. SPECIAL DITCH WITH STONE FILL, TYPE I

STA. 194+16.87

STA. 194+33 RT. REMOVE EXIST. 18" R.C.P.

STA. 195+00 CL NEW 18"X60" PCCSP(.064)OR CAAP(.060) OR RCP CL III OR CAAPES OR CPEP(SL) W/ CSPES OR CAAPES @ INLET AND STONE FILL, TYPE I @ OUTLET

STA. 198+35 LT. NEW 18"X36" CSP(.064) OR RCP CL III OR CPEP(SL) W/ CSPES @ INLET & OUTLET

MATCH TO SHEET 35

MATCH TO SHEET 37

WM. E DAILEY, INC.
PETER GUILLE, JR.

PETER GUILLE, JR.
DONALD M. TOWNE
ROY E. UNDERWOOD

BENNINGTON COUNTY
TOWN OF SEARSBURG
TOWN OF WILMINGTON
WINDHAM COUNTY

POT 188+37.31

POT 200+84.36

P.C. 189+63.37

Trees
Power Pole
8" Maple
Gravel Drive
Clump of 5" White Birch
Overhead Lines
Brush & Trees
6" White Birch
Wood Posts
Shrubs
Tree Line
Pipe
Conc. Footers
Anchor
Pin in Conc.
Gravel Turnout
CB 4'
Sign
Stone Wall
Exist. Highway Boundary
NET 524
NET 521 w/Brace Pole
NET 522 w/Brace Pole
NET 97X & 97XX w/Transformer #581
NET 523
NET 525 #520
NET 526 #354 #560
Conc. Mon. Vt. 1990 CAP 1061
County Line Sign
Tree Line #523
18" Oak
Tree to be removed
Approx. detail recall route to Mt. Snow (see west. hi. proj.)
DEERFIELD RIVER
Exist. Highway Boundary
WILLIAM E. DAILEY, INC.
DONALD M. TOWNE
ROY E. UNDERWOOD
ROUTE 9

187 188 189 190 191 192 193 194 195 196 197 198 199 200 201 202

PI 192+40.98 = 192+39.26

SCARIFYING PAVEMENT
189+00 TO 191+50
192+50 TO 198+00

STA. 190+43 RT. REMOVE EXIST. 15" RC.P.

B.M. # 8
R.R.S. 18" Oak
U.S. Elev. 1537.01

STEEL BEAM GUARD RAIL
187+00 - 187+97.5 RT.
MANUFACTURED TERMINAL SECTION
BEGIN AT 187+97.5 RT

RELOCATE MAILBOX, SINGLE SUPPORT
198+45 LT. TO 198+43 LT.

PLAN
0 50 100
Scale Feet

6" UNDERDRAIN

(39) 188+75 LT. ~ 192+04 LT.
NEW 6" x 329' UNDERDRAIN W/ FB @ 188+75 LT. AND 190+40 LT.

(41) 192+06 LT. ~ 195+01 LT.
NEW 6" x 295' UNDERDRAIN W/ FB @ 192+06 LT. AND 193+54 LT.

(43) 195+03 LT. ~ 198+50 LT.
NEW 6" x 347' UNDERDRAIN W/ FB @ 195+03 LT. AND 196+77 LT.

6" UNDERDRAIN CARRIER PIPE

(38) 188+25 RT.
NEW 6" x 20' UNDERDRAIN CARRIER PIPE W/ FB @ 188+25 RT.

(40) 192+04 LT. - RT.
NEW 6" x 90' UNDERDRAIN CARRIER PIPE W/ FB @ 192+04 LT.

(42) 195+01 LT. - RT.
NEW 6" x 90' UNDERDRAIN CARRIER PIPE W/ FB @ 195+01 LT.

(44) 198+50 LT. RT.
NEW 6" x 814' UNDERDRAIN CARRIER PIPE W/ FB @ 198+50 LT.

8" UNDERDRAIN

(45) 198+52 LT. ~ 206+62 LT.
NEW 8" x 810' UNDERDRAIN W/ FB @ 198+52 LT. AND 201+22 LT. AND 203+92 LT.

(46) 198+75 RT. ~ 207+00 RT.
NEW 8" x 825' UNDERDRAIN W/ FB @ 198+75 RT. AND 201+50 RT. AND 204+25 RT.

P.V.I. 199+50
ELEV. = 1531.81
L.V.C. = 800'
K = 5.56

-1.9600%
-0.5200%

1580 1560 1540 1520 1500

1530 1520 1510
0 50 100
PROFILE SCALE IN FEET

SEARSBURG — WILMINGTON
F 010 — 1 (18)
MAINLINE
SHEET 72 OF 435

PLAN
DRAWN
PLOTTED
NOTE BOOK
No.
DATE
BY
SURVEYED
PLOTTED
GRADES CHECKED
R.O.W. CHECKED
STRUCTURE NOTATIONS CHECKED

PROFILE
SURVEYED
PLOTTED
GRADES CHECKED
R.O.W. CHECKED
STRUCTURE NOTATIONS CHECKED

K&E PLATE 1, PLAN-PROFILE
KEUFFEL & ESSER CO.
18 7024 MADE IN U.S.A.

EROSION MATTING
213+00 LT ~ 218+50 LT.

NEW INLET DITCH - W/ STONE FILL, TYPE II TO MEET EXISTING BROOK

STA. 207+50, RT.
REMOVE EXIST. 10'X5' CONC. CULV.

84" Stone Culvert

STA. 210+30 C.L.
REMOVE EXIST. 30" C.M.P.

CONSTRUCT DRIVE
211+00, LT. (GRAVEL) 12' W

DRILLING AND BLASTING OF SOLID ROCK SUBGRADE
211+75 - 215+75

REMOVING AND RESETTING FENCE
211+00±, LT. TO 217+00±, LT.

CURVE DATA II
Δ = 32° 06' 46.9" LT.
D = 7° 30' 00"
R = 763.94'
T = 219.87'
L = 428.17'
E = 31.01'
Bank = 0.080'/'

STA. 215+00 C.L.
NEW 78" x 88" PCCSP(1064) OR CAAR060 OR RCP
CLASS III OR (SL) CSP, TYPE I W/ STONE OUTLET

B.M. # 10
R.P.S. 28" Ash
U.S. Elev. 1521.03

MATCH TO SHEET 38

PETER GUILLE, JR.
DONALD M. TOWNE
ROY E. UNDERWOOD
HEATHER BROOK
Magnetic 1984
STA. 203+00 TO STA. 204+00 LT. SPECIAL DITCH,
Gravel Drive
B.M. # 9
R.P.S. 20" Maple
U.S. Elev. 1526.22
PI 208+85.43 = 208+71.85
Boulder
Brush & Trees
20" Maple
10'x 5' Conc. Culv.
Stone H.W.
15" R.C.P.
Gravel Road
Trees
Exist. Highway Boundary
NET 518
NET 520
#518
#519
Anchor
PC. 205+82.23
DEERFIELD RIVER
STA. 203+22, RT.
REMOVE EXIST. 15" R.C.P.
STA. 207+14, SKEW X 58°
NEW 11'-1" X 7'-0" X 102' CAAPPA (.125) W/ CONC. CRADLES (@ BOTH ENDS (BRIDGE NO. 126)
NEW OUTLET DITCH - W/ STONE FILL, TYPE II, TO MEET EXIST. CREEK
209+50 RT.
NEW 12" x 22' CSP (.064) W/ PRCCDI W/ 1-10° ELBOW
STA. 210+00, C.L. SKEW 73° RT.
NEW 54" x 58' PCCSP(1069 OR CAAP (105) W/ STONE FILL, TYPE II @ OUTLET
APPROX. AERIAL RELOC. ROUTE 9 BY GMP, NE & S, NE & S, HYPERION
CURVE DATA 10
Δ = 29° 38' 27.0" RT.
D = 5° 00' 00"
R = 1145.92'
T = 303.20'
L = 592.82'
E = 39.43'
Bank = 0.071'/'
PT. 211+76.06
212+62 C.L.
NEW 78" x 64" PCCSP(1064) OR CAAP(1060) OR CAAR060
REMOVE EXIST. 18" C.M.P.
212+50 RT.
NEW 12" x 16' CSP (.064) W/ PRCCDI
S.R.
GMP 114
PC. 214+16.31
DRIVEWAY DITCH
R=30
R=20
Tree Line
Overhead Power Lines
Exist. Highway Boundary
18" C.M.P.
ROUTE 9
C.C.&R.
Sign
Trees
#513
NET 513
354
VIOLA B. MORSE
PETER GUILLE, JR.
VIOLA B. MORSE
TREATED TIMBER CURB
206+50 RT. - 212+50 RT.
DEERFIELD RIVER
REMOVAL AND DISPOSAL OF GUARD RAIL
207+13 RT. - 207+83 RT.
207+18 RT. - 207+88 RT.
211+24 RT. - 216+87 RT.
STEEL BEAM GUARD RAIL
206+12.5 - 208+87.5 LT.
205+82.5 - 217+00, RT.
MANUFACTURED TERMINAL SECTION
END AT 205+82.5 RT
BEGIN AT 208+87.5 LT
END AT 206+12.5 LT
PI 216+35.18 = 216+23.61
MATCH TO SHEET 38
PLAN
0 50 100
Scale Feet

6" UNDERDRAIN

(50) 207+65 RT. ~ 208+25 RT.
NEW 6" x 60' UNDERDRAIN W/ FB @ 208+25 RT.

(51) 211+75 LT. ~ 212+62 LT.
NEW 6" x 87' UNDERDRAIN W/ FB @ 211+75 LT.

(52) 212+67 LT. ~ 215+00 LT.
NEW 6" x 233' UNDERDRAIN W/ FB @ 212+67 LT.

(53) 215+05 LT. ~ 218+25 LT.
NEW 6" x 320' UNDERDRAIN W/ FB @ 215+05 LT. AND 216+65 LT.

6" UNDERDRAIN CARRIER PIPE

(49) 207+58 RT. ~ 207+65 RT.
NEW 6" x 15' UNDERDRAIN CARRIER PIPE W/ FB @ 207+65 RT.

8" UNDERDRAIN CARRIER PIPE

(47) 206+62 LT. ~ 206+75 LT.
NEW 8" x 24' UNDERDRAIN CARRIER PIPE W/ FB @ 206+62 LT.

(48) 207+00 RT. ~ 207+37 RT.
NEW 8" x 47' UNDERDRAIN CARRIER PIPE W/ FB @ 207+00 RT.

PW.I. 213+25
ELEV. = 1524.66
L.V.C. = 400'
SS.D. = 938

-0.5200%
-1.4200%

1560
1540
1520
1500
1480

202 203 204 205 206 207 208 209 210 211 212 213 214 215

1510
1500
1490
0 50 100
PROFILE
SCALE IN FEET

216 217

SEARSBURG — WILMINGTON
F 010 — 1 (18)
MAINLINE
SHEET 73 OF 435

PLATE 1, PLAN-PROFILE
KEUFFEL & ESSER CO.
48 7024 MADE IN U.S.A.

PLAN
SURVEYED
PLOTTED
NOTE BOOK
No.
ALIGNMENT CHECKED
EL. OF WAY CHECKED
BY
DATE

PROFILE
SURVEYED
PLOTTED
GRADES CHECKED
NOTE BOOK
No.
STRUCTURE NOTATIONS CHECKED
BY
DATE

PLAN — SURVEYED: — PLOTTED: — NOTE BOOK — No. — BY — DATE — ALIGNMENT CHECKED — R.P. OR MAP CHECKED

PROFILE — SURVEYED: — PLOTTED: — NOTE BOOK — No. — BY — DATE — GRADES CHECKED — R.P. OR MAP CHECKED — STRUCTURE NOS & LOCNS. CHECKED

ROUTE 9 217+60± T.H. 31 20+00

MATCH TO EXIST. T.H. 31 BRIDGE
STA. 218+49 CL
REMOVE EXIST. 18" R.C.P.

STA. 217+00 TO STA. 218+50 SPECIAL DITCH

STA. 218+50 ~ 219+25 LT. CONSTRUCT SPECIAL DITCH FILL, TYPE II W/ STONE

STA. 218+50 CL NEW 30"x48" PCCSP(079) OR CAAP(075) OR RCP CL III OR (PEP (SL) W/ STONE FILL, TYPE II @ INLET AND OUTLET W/ CSPES OR CAAPES

STA. 220+40 ~ 221+40 LT. NEW RETAINING WALL NO.2

221+75 LT. ± EXIST. CELLAR DRAIN READY FOR TO CONNECT TO NEW D.I

222+95 LT. ± EXISTING 4" CELLAR DRAIN CONNECT TO NEW 12" PIPE

NEW 6"x10" UNDERDRAIN W/F&G @ 222+00 RT. & 223+94 LT.

STA. 222+43 ~ 223+78 LT. NEW 12"x 308' CSP (064) OR CPEP(SL) OR RCP, CL III

STA. 223+55 ~ 224+55 LT. CONSTRUCT SPECIAL DITCH W/ STONE FILL, TYPE I

STA. 224+75 LT. NEW 6'WIDE X 540' SODDED GUTTER

AERIAL RELOCATE ROUTE BY GMP, NEES, NET'S HYPERION

STA. 224+00 CL NEW 42"x 176' PCCSP(109) OR CAAP(106) W/ CSPES OR CAAPES @ INLET AND STONE FILL, TYPE I @ VERTICAL RISER

STA. 224+50 RT. NEW 12"x 11' CSP (.064) W/ PRCCDI W/ 1-10° ELBOW

224+00 RT. NEW 12"x 13' CSP (.064) W/ PRCCDI W/ 1-10° ELBOW

226+50 RT. NEW 12"x 17' CSP (.064) W/ PRCCDI.

STA. 222+85 ~ 224+40 LT. NEW 6'WIDE X 540' SODDED GUTTER

STA. 222+15 LT. CONSTRUCT FIELD DRIVE 226+75 LT. (16' GRAVEL)

STA. 222+15 CL REMOVE EXIST. 15" R.C.P.

PC 222+80.03

STA. 219+60 CL REMOVE EXIST. 15" R.C.P.

STA. 219+35 TO STA. 224+75 LT. REMOVE EXIST. 18" C.M.P.

STA. 227+00 TO STA. 228+50 LT. SPECIAL DITCH, 4' WIDE

STA. 228+00 CL NEW 18"x 68' PCCSP(.060) OR CAAP(.060) OR (PEP (SL)

STA. 226+75 LT. NEW 15"x 32' CSP(.064) OR RCP (SL) CLASS III OR CPEP (SL)

PI 225+25.91 = 225+09.92

STA. 227+00 TO STA. 228+50 LT. REMOVE EXIST. 18" R.C.P.

STA. 226+25 LT. CONSTRUCT FIELD DRIVE 218+50, LT. TO 225+75, LT. (GRAVEL)* 16'W

PT 227+55.80

Stone Fill Type II Slope Blanket
STA. 219+25 ~ 220+75 LT. (DRIVE)

Removing and Resetting Fence
217+00± LT. TO 220+50± LT.
223+00± LT. TO 227+00± LT.

Steel Beam Guard Rail
217+00 - 217+50, RT. (T.H. 31)
217+79 RT. (T.H. 31) ~ 229+00 RT.

Removal and Disposal of Guard Rail
217+42, RT. - 219+71, RT.
226+60, LT. - 229+00 LT.

Deciduous Trees
Sugar Maple 2-2½" Cal.
221+25 LT. 1 EA.
222+59 LT. 1 EA.
Flowering Crabapple 2-2½" Cal.
221+64 LT. (Radiant) 1 EA.
221+92 LT. (Snowdrift) 1 EA.
222+20 LT. (Royalty) 1 EA.

Treated Timber Curb
222+00 RT. - 228+50 RT.

Deciduous Shrubs
(Snowball 4'-5')
221+50 LT. 1 EA.
221+54 LT. 1 EA.
(Syringa French Hybrids)
221+74 Chas-Toly Dbl. Red 1 EA
221+78 Edith Cavelle Dbl. White 1 EA
221+82 Chas-Toly Dbl. Red 1 EA
222+02 Pres. Grevy Dbl. Blue 1 EA
222+06 Edith Cavelle Dbl. White 1 EA
222+10 Pres. Grevy Dbl. Blue 1 EA
(Hydrangea P.G. 24"-30")
222+30 LT. 1 EA.
222+34 LT. 1 EA.

Chain-Link Fence, 4 Feet
220+20 LT ~ 224+40 LT

Curve Data 12
Δ = 35°40'58.1" Rt.
D = 7°30'00"
R = 763.94'
T = 245.88'
L = 475.77'
E = 38.59'
Bank = 0.080%

Relocate Mailbox, Single Support
219+25 LT. TO 219+05 LT.

6' Sodded Ditch
219+35 LT. ~ 224+75 LT.

Treated Timber Curb
222+00 RT. - 228+50 RT.

Plan
0 50 100
Scale Feet

6" Underdrain
(55) 218+75 LT. ~ 223+46 LT. NEW 6" x 471' UNDERDRAIN W/ FB @ 218+75 LT. AND 221+11 LT.
(56) 228+50 LT. ~ 231+00 LT. NEW 6" x 250' UNDERDRAIN W/ FB @ 231+00 LT.

6" Underdrain Carrier Pipe
(54) 218+25 LT. ~ 218+50 LT. NEW 6" x 31' UNDERDRAIN CARRIER PIPE W/ FB @ 218+25 LT.
(57) 228+50 LT. ~ RT. NEW 6" x 60' UNDERDRAIN CARRIER PIPE W/ FB @ 228+50 LT.

* STA. 218+50 ~ 221+00 (PAVED) 16'W
STA. 223+50 ~ 225+75 (PAVED) 16'W

NOTE: DRIVEWAY SLOPE AT STA. 221+00 LT & 223+55 LT SHALL BE CONSTRUCTED IN A MANNER TO ALLOW VEHICULAR PASSAGE TO ADJACENT FIELDS.

Revegetation Plan STA. 221+25 ~ 222+60 LT. (edge of drive, top of roadway slope)
⊕ 2 Acer Saccharum (Sugar Maple) 2-2½" Cal.
∅ 3 Flowering Crabapple 2-2½" Cal.
⊗ 2 Viburnum Opulus Sterilis (Snowball) 4'-5'
⊖ 6 Syringa French Hybrids
◐ 2 Hydrangea P.G. 24"-30"

221+25 ⊕ | 221+50 ⊗ | 221+54 ⊗ | 221+64 ∅ | 221+74 ⊖ | 221+78 ⊖ | 221+82 ⊖ | 221+92 ∅ | 222+02 ⊖ | 222+06 ⊖ | 222+10 ⊖ | 222+20 ∅ | 222+30 ◐ | 222+34 ◐ | 222+59 ⊕

NOTE: THE ABOVE IS A SUGGESTED PLANTING. FINAL ARRANGEMENT TO BE DETERMINED BY PROPERTY OWNER AND THE ENGINEER.

PVI 20+31
ELEV 1519.63
LVC 38'
S.S.D. = 188

PVI 20+75
ELEV 1518.34
LVC 50'
K = 8

PVI 224+25
ELEV = 1509.04
L.VC. = 400'
K = 165

T.H. 31

PROFILE SCALE IN FEET

Drive Profile 218+50 LT ~ 225+75 LT

52' VC ELEV. 1515.10

54' VC ELEV. 1510.83

Bottom of sand Borrow

Cut to Fill Transition 228+15 ~ 228+44

NOTE:
FROM STA. 215+40 LT TO 226+40 LT ALL TREES REMOVED ALONG THIS PROPERTY FRONTAGE SHALL BE CUT IN 4 FOOT LENGTHS FOR THE PROPERTY OWNER'S USE AND SHALL BE PLACED IN A LOCATION AGREED UPON BY THE RESIDENT ENGINEER AND THE PROPERTY OWNER.

SEARSBURG — WILMINGTON
F 010 — 1 (18)
MAINLINE
SHEET 74 OF 435

K&E PLATE 1, PLAN-PROFILE KEUFFEL & ESSER CO.
48 7024 MADE IN U.S.A.

DRILLING AND BLASTING SOLID ROCK SUBGRADE
228+75 -234+25

MATCH TO SHEET 38

FREDERICK A. & LOIS A. BERGMAN

S.R. S.R. S.R.

Pole

B.M. # 11 Chiseled □ Rock U.S. Elev. 1507.91

Trees

Existing Highway Boundary

Tree Line

Pin in Conc.

Stone

Pole 20 Tree Anchor

Overhead Power Lines

Exist. Highway Boundary

Tree Line

DEERFIELD RIVER

ROT 230+45.45

ROT 234+69.8

Magnetic 1964

1½ Sty Fr. HO

Drive 14'

Bruce E Net 508

R=30'

STA. 236+70 LT. REMOVE EXIST. 15" C.M.P.

25'x3' Conc. Culvert w/wingwalls

Fr Barn

STA. 237+45+ LT. REMOVE EXIST. 25"x3" CONC. CULVERT

STA. 238+30 LT. REMOVE EXIST. 8" C.M.P.

FREDERICK A. & LOIS A. BERGMAN TO RAY T. & VIOLET G. RAFUS

Anchor

Gravel Parking

STA. 239+25 LT. REMOVE EXIST. 18" C.M.P.

15 N.F. No.

STA. 240+00 LT. REMOVE EXIST. 15" STEEL PIPE

RAY T. & VIOLET G. RAFUS TO JOHN H. & ELSIE POOR

Spruce

Pipe

Mail Box

I.P.

18" C.M.P.

VERMONT ROUTE 9

Sign

Existing Highway Boundary

C.G.R.

R=20'

CHANNEL

OVERFLOW

NEW ENGLAND POWER CO. SURVEY

OVERFLOW CHANNEL

BEGIN RELOCATION OVER FLOW CHANNEL STA. 237+32. RT.

END RELOCATION STA. 240+50. RT.

MATCH TO SHEET 40

CURVE DATA 13
Δ = 26° 15' 47.4" LT.
D = 4° 00' 00"
R = 1432.40'
T = 334.16'
L = 656.58'
E = 38.46'
Bank = 0.063'/'

REMOVAL + DISPOSAL OF GUARD RAIL
229+00 LT. ~ 236+00 RT.
240+70 LT. ~ 241+00 LT.

REMOVAL AND DISPOSAL OF GUIDE POSTS
237+50, LT. -237+80, LT.

SCARIFYING PAVEMENT
235+00 TO 238+00

CONSTRUCT DRIVE
236+62, LT. (PAVED) 14' W
239+29, LT. (GRAVEL) 16' W

EXCAVATION OF SURFACES AND PAVEMENTS
230+15, RT. TO 234+75, RT.

STEEL BEAM GUARD RAIL
229+00 – 230+45.5 RT.
235+12.5 – 241+00, RT.

MANUFACTURED TERMINAL SECTION
END AT 235+12.5 RT
BEGIN AT 230+50 RT

STA. 232+68 RT. REMOVE EXIST. 24" C.M.P.
STA. 233+50 Cl. NEW 68'x 92" RCCSP(064)OR CAAP(060) OR RCP CL III OR CPEP W/ STONE FILL, TYPE I @ OUTLET

APPROX. AERIAL RELOC. ROUTE BY GMP, NEES, NET; HYPERION

STA. 236+36 Cl. NEW 78"x 72" RCCSP(064)OR CAAP(060) OR CPEP(SL)

STA. 238+50 Cl. NEW 48"x 112" RCCSP(109)OR CAAP(105) W/ CAPES & STONE FILL, TYPE II @ INLET

238+92 LT. ~ 239+56 LT. NEW 36"x 64" CSP(079)OR RCP CL III OR CPEP(SL)

EQUALITY = -7.17'
PC 238+76.24 BK =
238+83.41 AHD

PLAN
0 50 100
Scale Feet

6" UNDERDRAIN

(58) 229+50 RT. ~ 231+00 RT.
NEW 6" x 150' UNDERDRAIN W/ FB @ 231+00 RT.

(60) 231+02 LT. ~ 233+50 LT.
NEW 6" x 248' UNDERDRAIN W/ FB @ 231+02 LT.

(61) 231+02 RT. ~ 232+50 RT.
NEW 6" x 148' UNDERDRAIN W/ FB @ 231+02 RT.

(62) 233+55 LT. ~ 236+36 LT.
NEW 6" x 281' UNDERDRAIN W/ FB @ 233+55 LT. AND 234+96 LT.

6" UNDERDRAIN CARRIER PIPE

(59) 229+50 RT.
NEW 6" x 22' UNDERDRAIN CARRIER PIPE W/ FB @ 229+50 RT.

(62) 232+50 RT.
NEW 6" x 20' UNDERDRAIN CARRIER PIPE W/ FB @ 232+50 RT.

P.V.I. 231+00
ELEV. = 1515.79
L.V.C. = 400'
S.S.D. = 540'

+1.0000%

-0.9200%

+0.9504%

Bottom of sand Borrow

CUT TO FILL TRANSITION
235+44 ~ 235+84

P.V.I. 238+50
ELEV. = 1508.89
L.V.C. = 400'
K = 214

EQUALITY = -7.17'
PC 238+76.24 BK =
238+83.41 AHD

1540 1520 1500 1480 1460

229 230 231 232 233 234 235 236 237 238 239 240 241

PROFILE SCALE IN FEET
0 50 100
1490 1480 1470

PLAN
SURVEYED
PLOTTED
NOTE BOOK
No.
ALIGNMENT CHECKED
RT. OF WAY CHECKED
BY
DATE

PROFILE
SURVEYED
PLOTTED
GRADES CHECKED
NOTE BOOK
No.
STRUCTURE NOTATIONS CHECKED
BY
DATE

SEARSBURG – WILMINGTON
F 010 – 1 (18)
MAINLINE
SHEET 35 OF 435

K+E PLATE 1, PLAN PROFILE
KEUFFEL & ESSER CO.
46 7024 MADE IN U.S.A.

REMOVAL AND DISPOSAL OF GUARD RAIL
241+00, LT. -249+70, RT.
250+50, RT. - 254+00 RT

STEEL BEAM GUARD RAIL
241+00-252+87.5 RT.
MANUFACTURED TERMINAL SECTION
BEGIN AT 252+87.5 RT

DRILLING & BLASTING SOLID ROCK SUBGRADE
251+75 - 254+00

SCARIFYING PAVEMENT
249+50 TO 252+00

6' SODDED DITCH
243+00 ~ 243+70 LT.
241+05 ~ 244+66 LT.

CURVE DATA 14
Δ = 34°32'34.8" LT.
D = 6°00'00"
R = 954.93'
T = 296.91'
L = 575.72'
E = 45.09'
Bank = 0.077H

P.C. 250+32.91

B.M. # 12
R.R.S 24" Oak
U.S. Elev. 1511.21

EXCAVATION OF SURFACES AND PAVEMENTS
W 251+70, RT. TO EAST CONN 11+90, RT.

CONSTRUCT DRIVE
241+36, LT. (GRAVEL) 12' W
243+91, LT. (GRAVEL) 12' W
244+86, LT. (PAVED) (NOTE LEACH FIELD 40' W
246+00 LT (GRAVEL) UNDER DRIVE) 16' W

PLAN
0 50 100
Scale Feet

RELOCATE MAILBOX, SINGLE SUPPORT
241+41 LT. TO 241+40 LT.

APPROX AERIAL RECL ROUTE BY GM73 NEESS NET, HYPERION

*SAVE LOGS FOR PROPERTY OWNER AUSTIN

6" UNDERDRAIN

(64) 242+00 LT. ~ 244+00 LT.
NEW 6" × 200' UNDERDRAIN
W/ FB @ 244+00 LT.

(66) 244+05 LT. ~ 245+45 LT.
NEW 6" × 140' UNDERDRAIN
W/ FB @ 245+45 LT.

(67) 245+50 LT. ~ 246+83 LT.
NEW 6" × 133' UNDERDRAIN
W/ FB @ 246+83 LT.

(68) 246+88 LT. ~ 250+95 LT.
NEW 6" × 407' UNDERDRAIN
W/ FB @ 248+92 LT. AND
250+95 LT.

(69) 251+00 LT. ~ 253+45 LT.
NEW 6" × 245' UNDERDRAIN
W/ FB @ 253+45 LT.

(70) 253+50 LT. ~ 255+50 LT.
NEW 6" × 200' UNDERDRAIN
W/ FB @ 255+50 LT.

(71) 253+50 RT. ~ 255+50 RT.
NEW 6" × 200' UNDERDRAIN
W/ FB @ 255+50 RT.

6" UNDERDRAIN CARRIER PIPE

(65) 242+00 LT. - RT.
NEW 6" × 72' UNDERDRAIN
CARRIER PIPE W/ FB @
242+00 LT.

(72) 253+50 RT.
NEW 6" × 22' UNDERDRAIN
CARRIER PIPE W/ FB @
253+50 RT.

CONSTRUCT GEOSYNTHETIC REINFORCED SLOPES
STA 246+75 - 249+75 RT

PVI 247+00
ELEV. = 1516.90
L.VC. = 500'
S.S.D = 1726

+0.950H%

Bottom of Sand Borrow

CUT TO FILL TRANSITION
242+86~243+39

+0.5000%

Bottom of Sand Borrow

CUT TO FILL TRANSITION
251+80~252+27

1500
1490
1480
0 50 100
PROFILE SCALE IN FEET

LANDSCAPING ITEMS FOR MR. AUSTIN'S PROPERTY
(PLANTING LOCATION TO BE DETERMINED BY PROPERTY OWNER AND RESIDENT ENGINEER)
ONE 1½" CORTLAND APPLE TREE (SEMI-DWARF)
ONE 1½" MCINTOSH APPLE TREE (SEMI-DWARF)
ONE 7 GAL LIBERTY APPLE TREE (SEMI-DWARF)
ONE 7 GAL RED DELICIOUS APPLE TREE (SEMI-DWARF)
ONE 7 GAL 4 IN 1 APPLE TREE (SEMI-DWARF)
(CORTLAND, LODI, MCINTOSH AND SUMMER RED)
FOUR 5-6' PICEA GLAUCA (EVERGREEN TREES)
16 FIVE GAL. VIBURNUM PLICATUM VAR. TOMENTOSUM "SHASTA" SHRUBS
(TO BE PLACED 3 FT APART, CENTER TO CENTER)

PLAN: SURVEYED, PLOTTED, NOTE BOOK, No., DATE, BY, ALIGNMENT CHECKED, R.P. OR WAY CHECKED

PROFILE: SURVEYED, PLOTTED, GRADES CHECKED, No., DATE, BY, STRUCTURE NOTATIONS CHECKED

264

SEARSBURG — WILMINGTON
F 010 — 1 (18)
MAINLINE
SHEET 76 OF 435

DEMOLITION AND DISPOSAL OF BUILDING NO. 2 AT STA. 257+80, LT.

DRILLING AND BLASTING SOLID ROCK SUBGRADE
254+00 - 258+25
E. CONN. 10+20 - E. CONN. 11+75

6" UNDERDRAIN

(73) 255+52 LT. ~ 259+50 LT. NEW 6" x 398' UNDERDRAIN W/ FB @ 255+52 LT. AND 257+51 LT.

(74) 255+52 RT. ~ 259+50 RT. NEW 6" x 398' UNDERDRAIN W/ FB @ 255+52 RT. AND 257+51 RT.

(89) 10+50 LT. ~ 12+40 LT. NEW 6" x 190' UNDERDRAIN W/ FB @ 10+50 LT.

(76) 263+00 LT. ~ 264+36 LT. NEW 6" x 136' UNDERDRAIN W/ FB @ 263+00 LT.

(77) 263+25 RT. ~ 264+34 RT. NEW 6" x 109' UNDERDRAIN W/ FB @ 263+25 RT.

(79) 264+36 LT. ~ 267+50 LT. NEW 6" x 314' UNDERDRAIN W/ FB @ 265+97 LT. AND 267+50 LT.

(80) 264+38 RT. ~ 267+25 RT. NEW 6" x 287' UNDERDRAIN W/ FB @ 265+82 RT. AND 267+25 RT.

(82) 267+62 LT. ~ 269+00 LT. NEW 6" x 138' UNDERDRAIN W/ FB @ 269+00 LT.

6" UNDERDRAIN CARRIER PIPE

(75) 259+50 LT. NEW 6" x 19' UNDERDRAIN CARRIER PIPE W/ FB @ 259+50 LT.

(78) 264+34 RT. NEW 6" x 70' UNDERDRAIN CARRIER PIPE W/ FB @ 264+34 RT.

(81) 264+38 RT. NEW 6" x 70' UNDERDRAIN CARRIER PIPE W/ FB @ 264+38 RT.

268+75 LT.
NEW 15" X 28' CSP(.064) OR RCP CLASS III OR CPEP (SL) W/ CSPES @ INLET AND OUTLET

STA 258+94± TO STA 261+78±, LT. SPECIAL DITCH, TYPE I W/ STONE FILL, TYPE I

NEW 15" X 56' CSP(.064) OR RCP CLASS III OR CPEP (SL) W/ MES @ INLET AND OUTLET

STA. 262+13, SKEW Δ 60°-30' RT. NEW 9'-11" X 6'-8" X 156' CAMPA (.125) W/ CONC. CRADLES @ 6'-8" & 156' CAMPA (.125) W/ CONC. CRADLES @ BOTH ENDS AND DITCHES W/ STONE FILL, TYPE II @ INLET AND OUTLET

NEW 18" x 60' CPEP W/ STONE FILL, TYPE I @ OUTLET

STA. 262+80 LT. STA. 262+80 LT. RCP CL III OR CPEP (SL) (.064) OR RCP CL III OR CPEP (SL) (.064) W/ STONE FILL, TYPE I @ OUTLET

REMOVE EXISTING 15" CMP

STA. 263+08 LT.

REMOVE EXIST. 5'x5' CONC. CULV.

STA 262+25± RT.

STA 260+00 TO STA 261+20 RT. SPECIAL DITCH, TYPE I W/ STONE FILL, TYPE I

STA 260+00 (SKEWED) CONSTRUCTION CONNECTOR EAST DRIVE NEW 18"x92' PCCSP(.064) OR CAAP (.060) OR RCP CLASS III OR CPEP (SL) W/ STONE FILL, TYPE I @ INLET AND OUTLET

STA 261+20 RT. END CONSTRUCTION EAST DRIVE OVERLAY STA 260+00 RT. - STA 261+70 RT. EXIST. CELLAR DRAIN (CUT & DRAIN) @ STA. 260+00 TO 262+25± RT. (APPROX. LOC.) SPECIAL DITCH @ STA. 260+00 OUT

STA 259+50 RT. TO 260+00 LT. NEW 18" x 70' PCCSP(.064) OR CAAP (.060) OR RCP CLASS III OR CPEP (SL) W/ DITCH CHECK @ INLET

STA 263+60 TO STA 268+57 LT. NEW 18" x 500' PCCSP(.064) OR CAAP (.060) OR RCP CLASS III OR CPEP (SL) W/ STONE FILL, TYPE I @ OUTLET

STA 268+57 LT. REMOVE 18" C.M.P.

STA 268+50 RT. NEW 12" x 20' PCCSP(.064) OR CAAP (.060) OR RCP CLASS III OR CPEP (SL) W/ STONE FILL, TYPE I @ OUTLET

STA 12+40 RT. REMOVE EXIST. 15" C.M.P.

STA 12+40 Cl. NEW 18" x 56' PCCSP(.064) OR CAAP (.060) OR RCP CLASS III OR CPEP (SL) W/ STONE FILL, TYPE I @ OUTLET

EROSION MATTING
257+00 LT. ~ 258+65 LT.
257+00 RT. ~ 260+00 RT.
260+00 RT. ~ 261+20 RT.

TREATED TIMBER CURB
268+50 RT. - 269+00 RT

RELOCATE MAILBOXES, SINGLE SUPPORT
263+37 TO 263+49 LT
259+80 RT TO 258+35 LT
NOTE: RELOCATE ONE OF THE TWO BOXES AT STA. 259+80 RT. TO 258+95 LT. PARCEL 19 STAYS IN PLACE.

6' SODDED DITCH
263+50 ~ 268+57 LT.

STEEL BEAM GUARD RAIL
258+47.5 - E.D.C. 259+82.5 RT.
260+03 - 262+53 LT
261+80 - 262+55 RT
EDC 23+60 - 263+13 RT (PARKING AREA)
EAST CONN. 11+37.5 - 14+25 RT.
262+92 RT - 269+00 RT

REMOVAL AND DISPOSAL OF GUARD RAIL
EDC 23+70 RT. - 263+00. RT.
261+80. RT. - 262+60 RT.
254+00 RT - E. CONN. 14+40 RT

EROSION MATTING
262+00 - 263+00 RT
EAST CONN. 11+75 - 12+50 LT

CURVE DATA I
SIDE ROAD CONNECTOR
Δ = 47°30'
D = 23°00'
R = 249.11'
T = 109.61'
L = 206.52'
E = 23.05'

MANUFACTURED TERMINAL SECTION
END AT 258+47.5 RT
END AT 260+03 LT

EXCAVATION OF SURFACES AND PAVEMENTS
@ 251+70, RT. TO EAST CONN. 11+90, RT.
COLD PLANING - BITUMINOUS PAVEMENT
13+00 - 13+25 EAST CONNECTOR
21+70 - 21+95 EAST DRIVE CONNECTOR

CONSTRUCT DRIVE
258+65, LT. (GRAVEL) 12'W
262+80, LT. (GRAVEL) 20'W
263+24, LT. (GRAVEL) 22'W
263+50, RT. (GRAVEL) 30'W
268+75, LT. (GRAVEL) 12'W
261+67 To 263+35 Rt (Gravel Drive & Parking Area)

B.M. # 13
R.R.S. 24" Oak
U.S. Elev. 1510.69

PLAN
0 50 100
Scale Feet

IN CHARGE OF: _____ DETAILED BY: _____ DATE
DESIGNED BY: _____ CHECKED BY: _____

SEARSBURG - WILMINGTON
F010-1 (18)

MAINLINE

McFARLAND-JOHNSON ENGINEERS, INC.
BINGHAMTON NEW YORK

SCALE AS NOTED | DATE | SHEET 77 OF 435

FINAL SURVEY
ORIGINAL SURVEY
NOTE BOOK
NO.
SURVEYED
PLOTTED
TEMPLATE
AREAS
AREAS CHECKED
BY
DATE

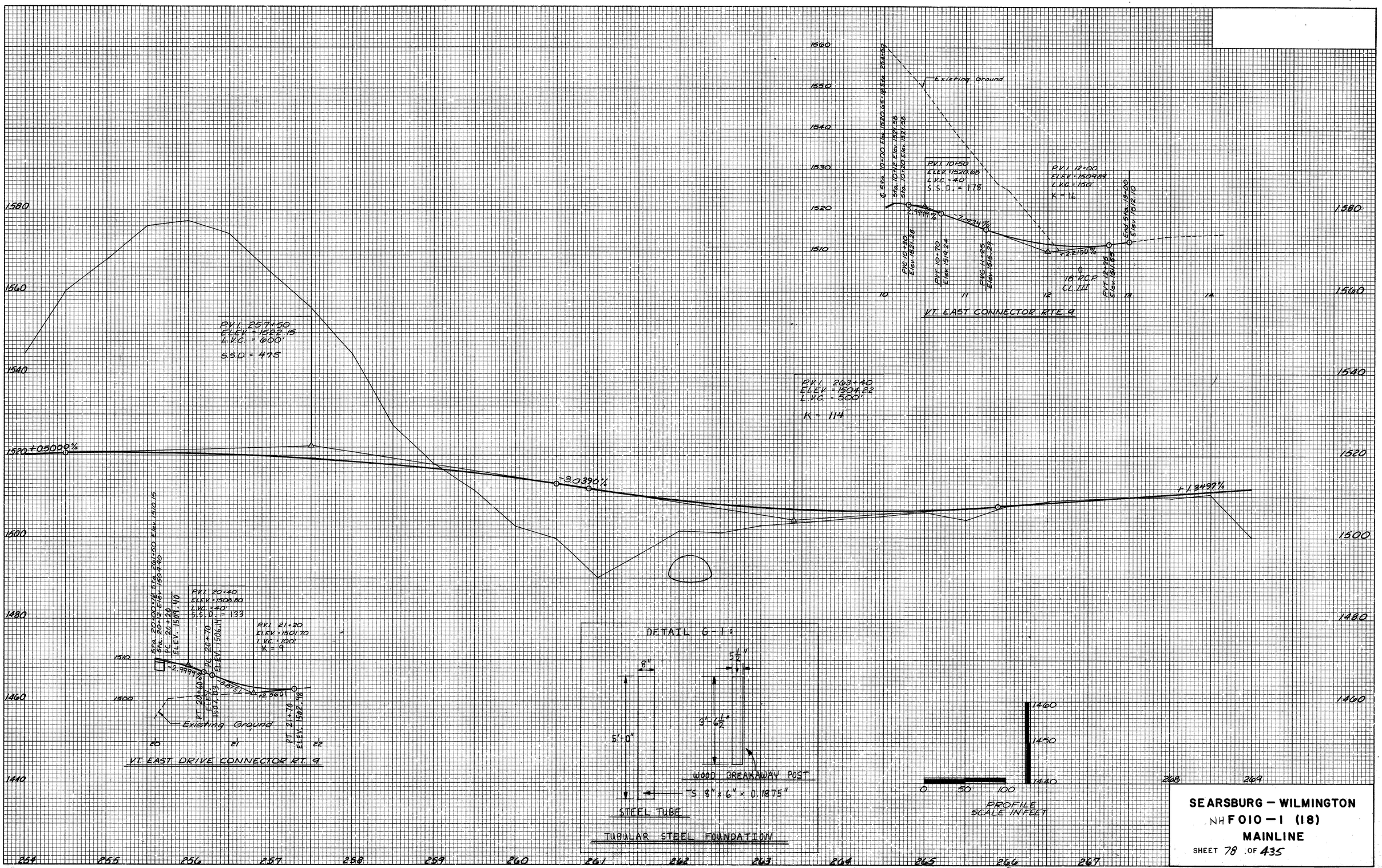

SEARSBURG — WILMINGTON
NH F 010 — 1 (18)
MAINLINE
SHEET 78 OF 435

K+E PLATE 3, CROSS SECTION
KEUFFEL & ESSER CO.
•18 7072 MADE IN U.S.A.•

272+00 LT ~ 275+25 LT.
GRADE TO DRAIN TO VERTICAL
RISER AT 272+00 LT.

B.M. N-14
USGS Disk
U.S. Elev. 1513.23

NOTE:
MAINTAIN EXIST.
PARKING AREA

GEORGE K. KUHN
ESTHER B. WHEELER

EQUALITY = 145.71' Bk. =
P.C. 269+39.89
270+85.60 Ahd.

MATCH TO SHEET 11

Ditch

Ft. Gar.

NET 482

1½ SWF Ho

Stone Retaining Wall 10" Conc. Base

24" CMP

Tree Line #181

STA. 272+25 LT.
REMOVE EXIST.
48" C.M.P.

ESTHER B. WHEELER
CHIMNEY HILL
PROPERTY OWNERS
ASSOC.

27H+29 CL
REMOVE EXIST
24" CONC. CULVERT

27H+36 CL
REMOVE EXIST. 24"
CMP

Stone Wall

Poles

P.T. 276+01.37

Pole Anchor

NET 480

#180

Brace Pole Anchor

C.B.

18" RCP

277 ROUTE 9

VERMONT

NEW ENGLAND POWER CO.

Trees

Pole

APPROX. NEW FILL REQ'D. BY CHAP. (TREES NOT IN PORTION)

P.C. 279+26.36

CURVE DATA 16
Δ = 13°34'37.1" LT.
D = 3°00'00"
R = 1909.86'
T = 227.35'
L = 452.67'
E = 13.48'
Bank = 0.053'/'

EXCAVATION OF SURFACES AND PAVEMENTS
269+00 ~ 269+39.89
270+85.60 ~ 273+50 LT

STA. 278+50 CL
NEW 18"X42" PCCSP(064) OR CAAP (060) W/ CPEP TYPE I Trees

STA. 280+55 LT.
REMOVE EXIST.
36" C.M.P.

CHIMNEY HILL
PROPERTY OWNERS
ASSOC.

B.M. # 14
R.R.S. 16" Maple
U.S. Elev. 1519.34

STA. 280+00 TO 282+50 LT.
SPECIAL DITCH, STONE FILL
TYPE I, FROM STA. 280+00
TO 281+00

STA. 283+95 LT.
REMOVE EXIST. 18" R.C.P.

STA. 282+50 TO 287+00 LT.
SPECIAL DITCH, STONE FILL
TYPE I, FROM STA. 284+50
TO 286+50

MATCH TO SHEET 11

Stone H.W.

Anchor

NET 477

#177

18" R.C.P.

NET 476

#176

Tree Line

Trees

Conc. H.W.

36" C.M.P.

Sign

NET 78

#175

Tree Maple

Turn-a-Round
P.I. 281+53.70=
281+51.57

Pole 55

NEW ENGLAND POWER CO.

285

284

283

282

281

280

279

278

277

276

275

274

273

272

271

270

269

18" C.M.P.

NET 483

#182

#183

#184

#185

#186

#187

#188

#189

#190

#191

#192

#193

#194

#195

#196

#197

#198

#199

#200

#201

#202

#203

#204

#205

#206

#207

#208

#209

#210

#211

#212

#213

#214

#215

#216

#217

#218

#219

#220

#221

EROSION MATTING
289+00 - 292+50, LT.

CHIMNEY HILL PROPERTY OWNERS ASSOC.

Trees

MATCH SHEET 43

Approx. Limit of Beach Owned by GMP NET, HYDRO

Anchor

NET 476

NET 476

354

18" R.C.P.

Tree Line

12"

285

286

287

288

289

290

NET 474

#995

#996

#997

#998

#999

#1000

#1001

#1002

#1003

#1004

#1005

#1006

#1007

#1008

#1009

#1010

#1011

#1012

#1013

#1014

#1015

#1016

#1017

#1018

#1019

#1020

#1021

#1022

#1023

#1024

#1025

#1026

#1027

#1028

#1029

#1030

#1031

#1032

#1033

#1034

Mag. 1984

BEGIN PAVEMENT MARKINGS
STA. 94+75

95 96 97 98 99 100 101 102 103 104 105 106 107 108 109 110

SPEED LIMIT 50 N

N

STA. 101+50 RT.

110 111 112 113 114 115 116 117 118 119 120 121 122 123 124

BRIDGES FREEZE BEFORE ROAD N N

STA. 113+50 RT

4" WHITE LINE

4" YELLOW LINE

4" WHITE LINE

N EAST VERMONT 9 N

STA. 120+00 RT.

TEMPORARY 4" WHITE LINE
STA. 94+75 Lt. – STA. 124+50 Lt.
STA. 94+75 Rt. – STA. 124+50 Rt.

TEMPORARY 4" YELLOW LINE
STA. 94+75 ℄ – STA. 124+50 ℄ (DOUBLE)

DURABLE 4" WHITE LINE
STA. 94+75 Lt. – STA. 124+50 Lt.
STA. 94+75 Rt. – STA. 124+50 Rt.

DURABLE 4" YELLOW LINE
STA. 94+75 ℄ – STA. 124+50 ℄ (DOUBLE)

LEGEND

- EXISTING SIGN
- PROPOSED SIGN N-NEW

NOT TO SCALE

DETAILED BY : NAME DATE
CHECKED BY :
IN CHARGE OF :
DESIGNED BY :

FORM NO. 1

SEARSBURG-WILMINGTON
NHF 010-1 (18)

PAVEMENT MARKINGS AND SIGN LOCATIONS

McFARLAND-JOHNSON ENGINEERS, INC.
BINGHAMTON NEW YORK

SCALE	DATE	SHEET
NONE	11-85	81 OF 435

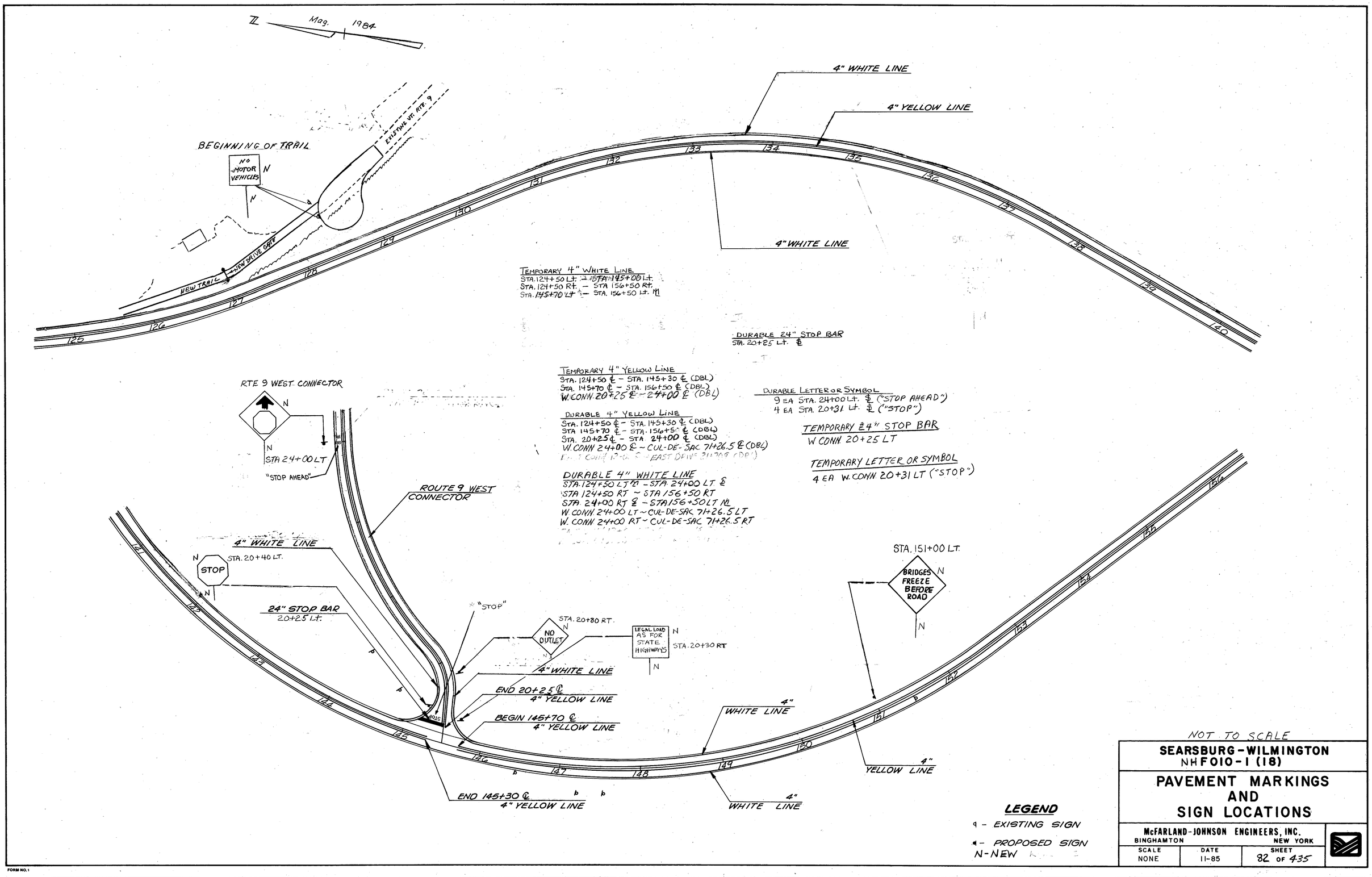

NOT TO SCALE

LEGEND

- EXISTING SIGN
- PROPOSED SIGN
- N-NEW

SEARSBURG-WILMINGTON
NHF010-1 (18)

PAVEMENT MARKINGS AND SIGN LOCATIONS

McFARLAND-JOHNSON ENGINEERS, INC.
BINGHAMTON NEW YORK

SCALE	DATE	SHEET
NONE	11-85	82 OF 435

IN CHARGE OF: _____ DETAILED BY: _____ NAME _____ DATE _____
DESIGNED BY: _____ CHECKED BY: _____

FORM NO. 1

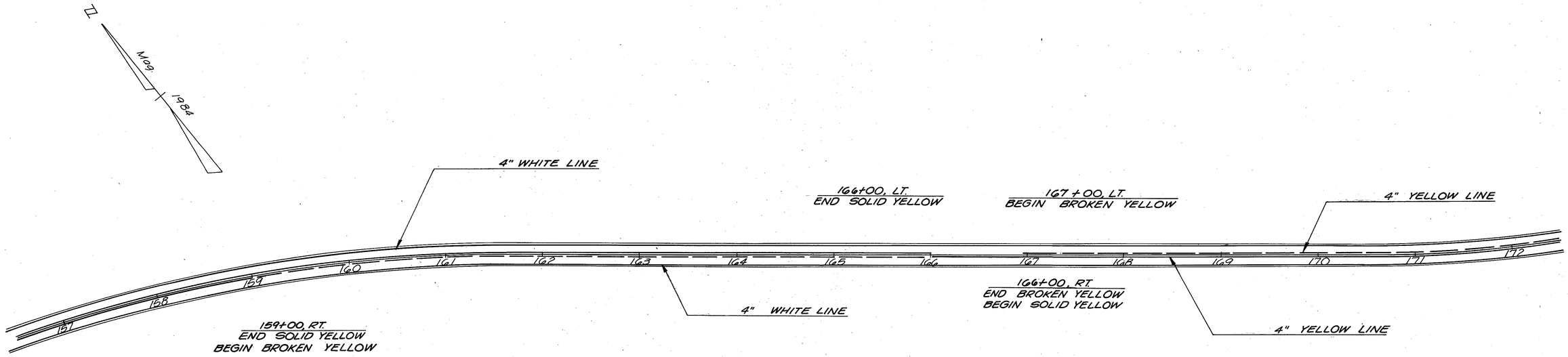

TEMPORARY 4" WHITE LINE
STA. 156+50 LT. – STA. 187+00 LT.
STA. 156+50 RT. – STA. 187+00 RT.

DURABLE 4" WHITE LINE
STA. 156+50 LT. – STA. 187+00 LT.
STA. 156+50 RT. – STA. 187+00 RT.

TEMPORARY 4" YELLOW LINE
STA. 156+50 ℄ – 159+00 ℄ (DBL)
STA. 159+00 ℄ – 166+00 ℄ (DASHED RT, SOLID LT)
STA. 166+00 ℄ – 167+00 ℄ (DBL SOLID)
STA. 167+00 ℄ – 173+00 ℄ (DASHED LT, SOLID RT)
STA. 173+00 ℄ – 180+00 ℄ (SOLID LT, DASHED RT)
STA. 180+00 ℄ – 181+00 ℄ (DBL SOLID)
STA. 181+00 ℄ – 187+00 ℄ (DASHED LT, SOLID RT)

DURABLE 4" YELLOW LINE
STA. 156+50 ℄ – 159+00 ℄ (DBL)
STA. 159+00 ℄ – 166+00 ℄ (DASHED RT, SOLID LT)
STA. 166+00 ℄ – 167+00 ℄ (DBL SOLID)
STA. 167+00 ℄ – 173+00 ℄ (DASHED LT, SOLID RT)
STA. 173+00 ℄ – 180+00 ℄ (SOLID LT, DASHED RT)
STA. 180+00 ℄ – 181+00 ℄ (DBL SOLID)
STA. 181+00 ℄ – 187+00 ℄ (DASHED LT, SOLID RT)

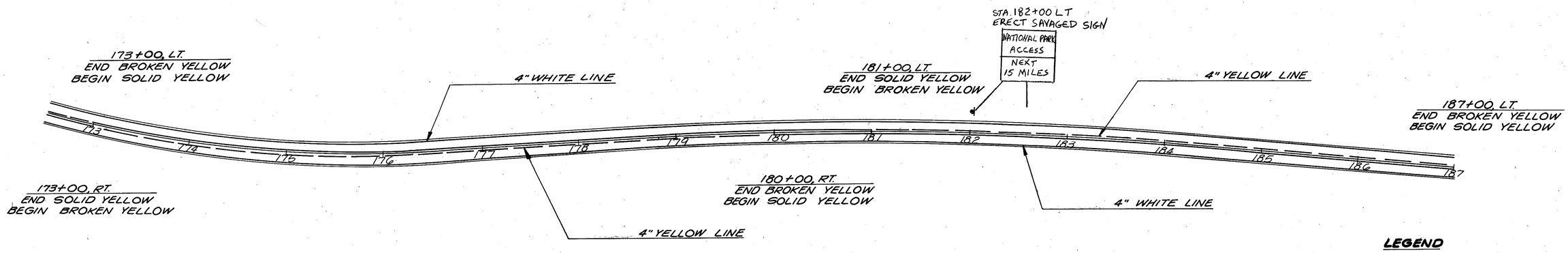

LEGEND
℄ – EXISTING SIGN
℄ – PROPOSED SIGN

NOT TO SCALE

IN CHARGE OF : _____ DETAILED BY : _____
DESIGNED BY : _____ CHECKED BY : _____
NAME _____ DATE _____

FORM NO. 1

SEARSBURG – WILMINGTON
NHF 010 – 1 (18)

PAVEMENT MARKINGS AND SIGN LOCATIONS

McFARLAND-JOHNSON ENGINEERS, INC.
BINGHAMTON NEW YORK

SCALE	DATE	SHEET
NONE	11-85	83 OF 435

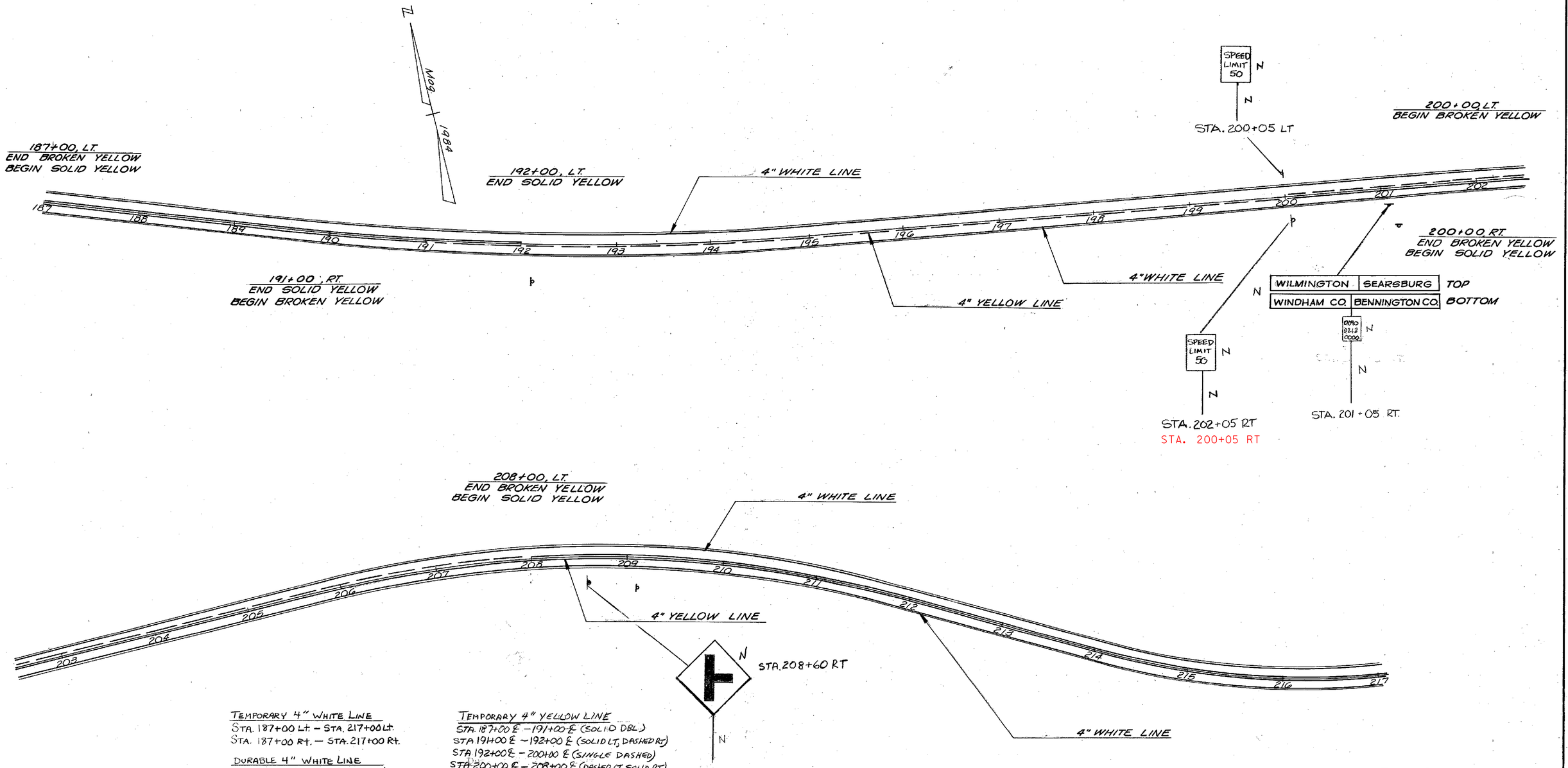

TEMPORARY 4" WHITE LINE
STA. 187+00 Lt. – STA. 217+00 Lt.
STA. 187+00 Rt. – STA. 217+00 Rt.

DURABLE 4" WHITE LINE
STA. 187+00 Lt. – STA. 217+00 Lt.
STA. 187+00 Rt. – STA. 217+00 Rt.

TEMPORARY 4" YELLOW LINE
STA. 187+00 ℄ – 191+00 ℄ (SOLID DBL)
STA 191+00 ℄ – 192+00 ℄ (SOLID LT, DASHED RT)
STA 192+00 ℄ – 200+00 ℄ (SINGLE DASHED)
STA 200+00 ℄ – 208+00 ℄ (DASHED LT, SOLID RT)
STA 208+00 ℄ – 217+00 ℄ (SOLID DBL)

DURABLE 4" YELLOW LINE
STA 187+00 ℄ – 191+00 ℄ (SOLID DBL)
STA 191+00 ℄ – 192+00 ℄ (SOLID LT, DASHED RT)
STA 192+00 ℄ – 200+00 ℄ (SINGLE DASHED)
STA. 200+00 ℄ – 208+00 ℄ (DASHED LT, SOLID RT)
STA. 208+00 ℄ – 217+00 ℄ (SOLID DBL)

LEGEND

◁ – EXISTING SIGN

◁ – PROPOSED SIGN
N-NEW

NOT TO SCALE

SEARSBURG - WILMINGTON
NHF 010-1 (18)

PAVEMENT MARKINGS AND SIGN LOCATIONS

McFARLAND-JOHNSON ENGINEERS, INC.
BINGHAMTON NEW YORK

SCALE	DATE	SHEET
NONE	11-85	84 OF 435

IN CHARGE OF :
DESIGNED BY :
DETAILED BY :
CHECKED BY :
DATE

FORM NO. 1

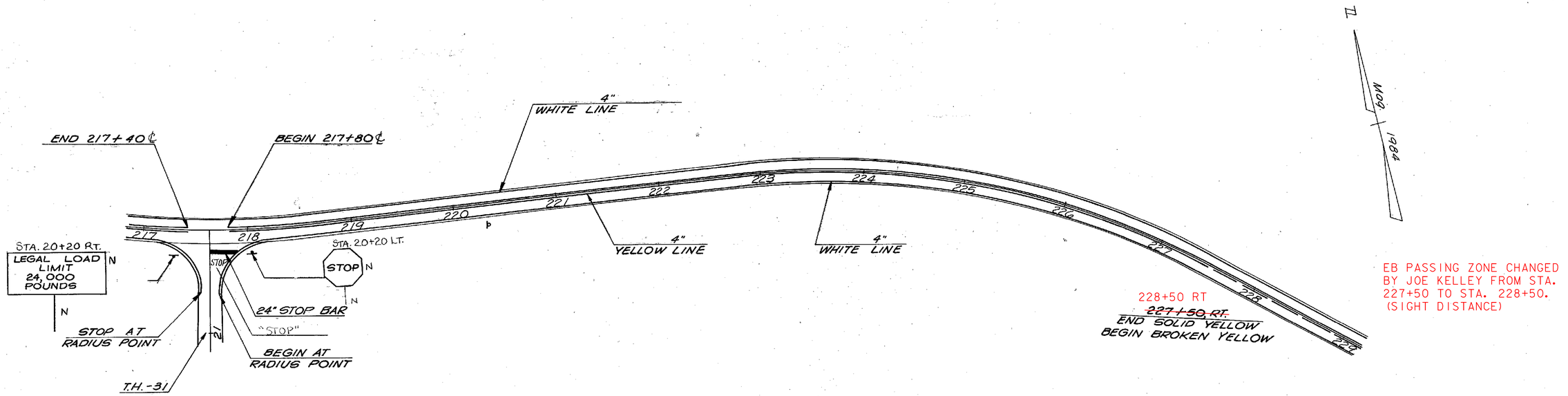

EB PASSING ZONE CHANGED BY JOE KELLEY FROM STA. 227+50 TO STA. 228+50. (SIGHT DISTANCE)

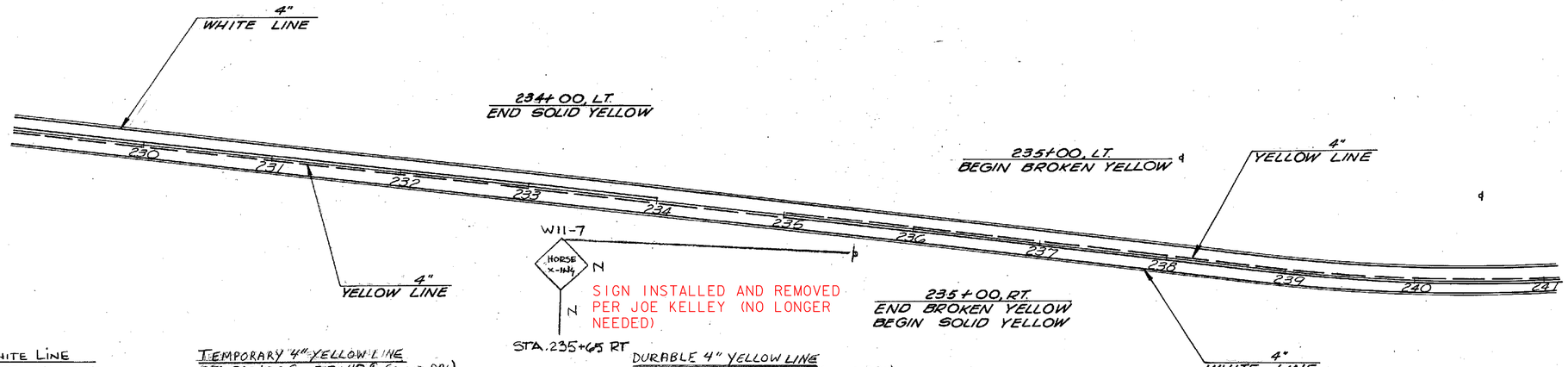

TEMPORARY 4" WHITE LINE
STA. 217+00 Lt. – STA. 241+00 Lt.
STA. 217+00 Rt. – STA. 217+20 Rt.
STA. 218+00 Rt. – STA. 241+00 Rt. 228+50

DURABLE 4" WHITE LINE
STA. 217+00 Lt. – STA. 241+00 Lt.
STA. 217+00 Rt. – STA. 20+60 Rt. (TH-31)
STA. 20+60 Lt. (TH-31) – STA. 241+00 Rt.

DURABLE LETTER OR SYMBOL
STA. 20+30 Lt. (TH-31) 4 EA ("STOP")

TEMPORARY 4" YELLOW LINE
STA. 217+00 ℄ – 217+40 ℄ (SOLID DBL)
STA. 217+80 ℄ – ~~227+50~~ ℄ (SOLID DBL) 228+50
STA ~~227+50~~ ℄ – 234+00 ℄ (SOLID LT, DASHED RT) 228+50
STA. 234+00 ℄ – 235+00 ℄ (SINGLE DASHED)
STA. 235+00 ℄ – 241+00 ℄ (DASHED LT, SOLID RT)
T.H. 31 20+20 ℄ – 20+60 ℄ (SOLID, DBL)

DURABLE 24" STOP BAR
STA. 20+20 Lt. (TH-31)

DURABLE 4" YELLOW LINE
STA. 217+00 ℄ – 217+40 ℄ (SOLID DBL)
STA. 217+80 ℄ – ~~227+50~~ ℄ (SOLID DBL) 228+50
STA ~~227+50~~ ℄ – 234+00 ℄ (SOLID LT, DASHED RT) 228+50
STA. 234+00 ℄ – 235+00 ℄ (SINGLE DASHED)
STA. 235+00 ℄ – 241+00 ℄ (DASHED LT, SOLID RT)
TH 31 STA. 20+20 ℄ – 20+60 ℄ (DBL)

TEMPORARY 24" STOP BAR
T.H. 31 20+20 LT

TEMPORARY LETTER OR SYMBOL
4 EA. TH 31 20+30 LT ("STOP")

LEGEND

℄ – EXISTING SIGN

℄ – PROPOSED SIGN
N-NEW

NOT TO SCALE

SEARSBURG - WILMINGTON
NHF 010-1 (18)

PAVEMENT MARKINGS AND SIGN LOCATIONS

McFARLAND-JOHNSON ENGINEERS, INC.
BINGHAMTON NEW YORK

SCALE	DATE	SHEET
NONE	11-85	85 OF 435

DETAILED BY :
CHECKED BY :
IN CHARGE OF :
DESIGNED BY :

FORM NO. 1

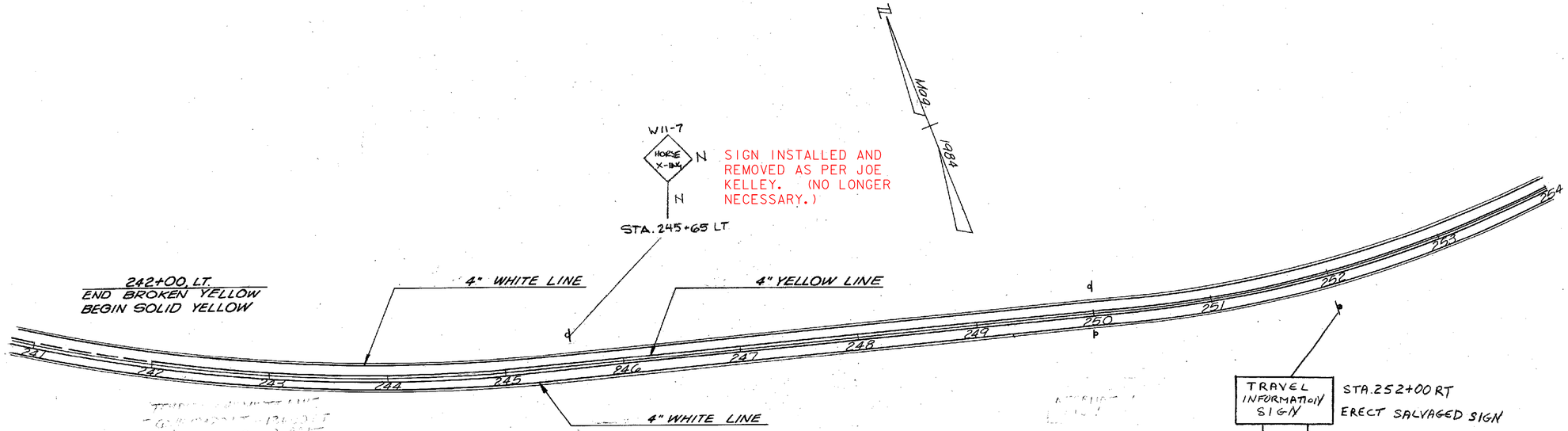

TEMPORARY 4" WHITE LINE
STA. 241+00 Lt. – STA. 269+00 Lt.
STA. 241+00 Rt. – STA. 254+20 Rt.
STA. 254+90 Rt. – STA. 261+10 Rt.
STA. 261+85 Rt. – STA. 269+00 Rt.

DURABLE 4" WHITE LINE
STA. 241+00 Lt. – STA. 269+00 Lt.
STA. 241+00 Rt. – STA. 13+00 Rt. (EAST CONNECTOR)
STA. 13+00 Lt. (EAST CONN.) – STA. 21+70 Rt. (EAST DRIVE CONN.)
STA. 21+70 Lt. (EAST DR. CONN) – STA. 269+00 Rt.
EAST CONN 13+00 Rt ~ E. DRIVE 21+70 Lt

TEMPORARY 4" YELLOW LINE
STA. 241+00 ℄ – 242+00 ℄ (DASHED LT, SOLID RT)
STA. 242+00 ℄ – 254+35 ℄ (SOLID DBL)
STA. 254+75 ℄ – 261+30 ℄ (SOLID DBL)
STA 261+70 ℄ – 265+70 ℄ (SOLID DBL)
STA 265+70 ℄ – 269+00 ℄ (DASHED LT, SOLID RT)
EAST CONN. 10+20 ℄ ~ 13+00 ℄ (SOLID, DBL)
E. DRIVE 20+20 ℄ ~ 21+70 ℄ (SOLID, DBL)

DURABLE 24" STOP BAR
STA. 10+20 Lt. EAST CONNECTOR
STA. 20+20 Lt. EAST DRIVE CONNECTOR

TEMPORARY 24" STOP BAR
EAST CONN. 10+20 LT
EAST DRIVE 20+20 LT

DURABLE 4" YELLOW LINE
STA. 241+00 ℄ – 242+00 ℄ (DASHED LT, SOLID RT)
STA. 242+00 ℄ – 254+35 ℄ (SOLID DBL)
STA. 254+75 ℄ – 261+30 ℄ (SOLID DBL)
STA. 261+70 ℄ – 265+70 ℄ (SOLID DBL)
STA 265+70 ℄ – 269+00 ℄ (DASHED LT, SOLID RT)
EAST CONN. 10+20 ℄ – 13+00 ℄ (SOLID DBL)
EAST DRIVE 20+20 ℄ – 21+70 ℄ (SOLID DBL)
EAST CONN. 13+00 ℄ ~ E. DRIVE 21+70 ℄ (SOLID DBL)

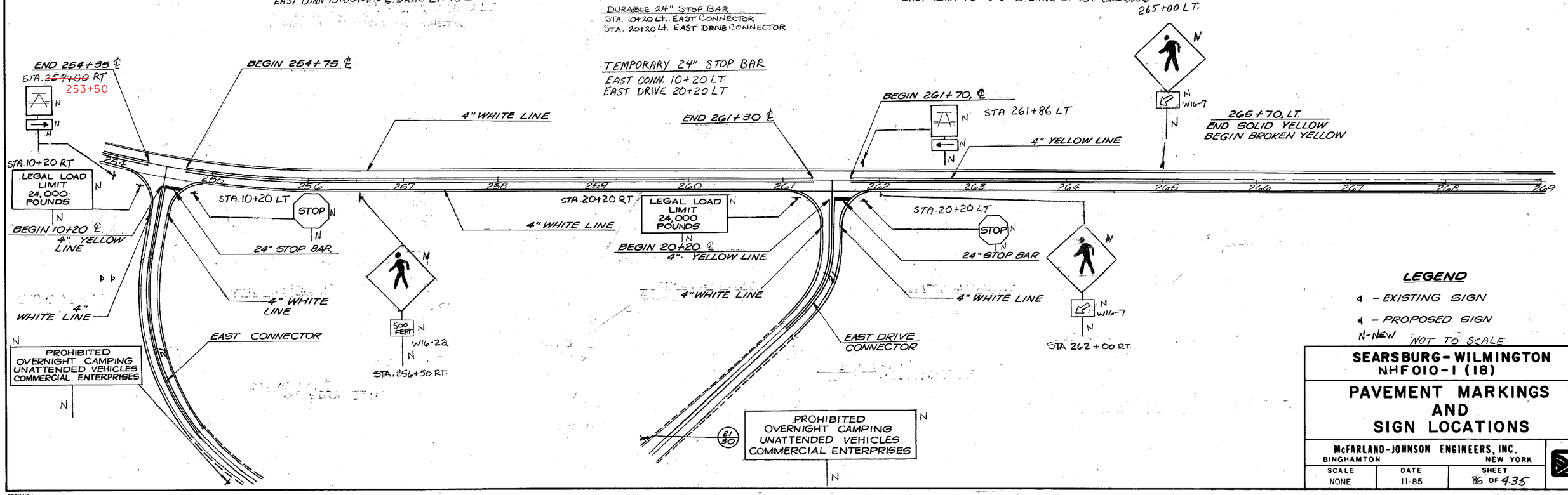

LEGEND
℄ – EXISTING SIGN
℄ – PROPOSED SIGN
N-NEW NOT TO SCALE

SEARSBURG-WILMINGTON
NHF010-1 (18)

PAVEMENT MARKINGS AND SIGN LOCATIONS

McFARLAND-JOHNSON ENGINEERS, INC.
BINGHAMTON NEW YORK

SCALE	DATE	SHEET
NONE	11-85	86 OF 435

IN CHARGE OF: DESIGNED BY: DETAILED BY: CHECKED BY:

FORM NO. 1

EQUATION IN STATIONING NOT ACCOUNTED FOR IN DESIGN. CHANGE FROM STA. 270+50 LT TO STA. 271+90.

STA. 271+90 LT

~~STA 270+50 LT.~~

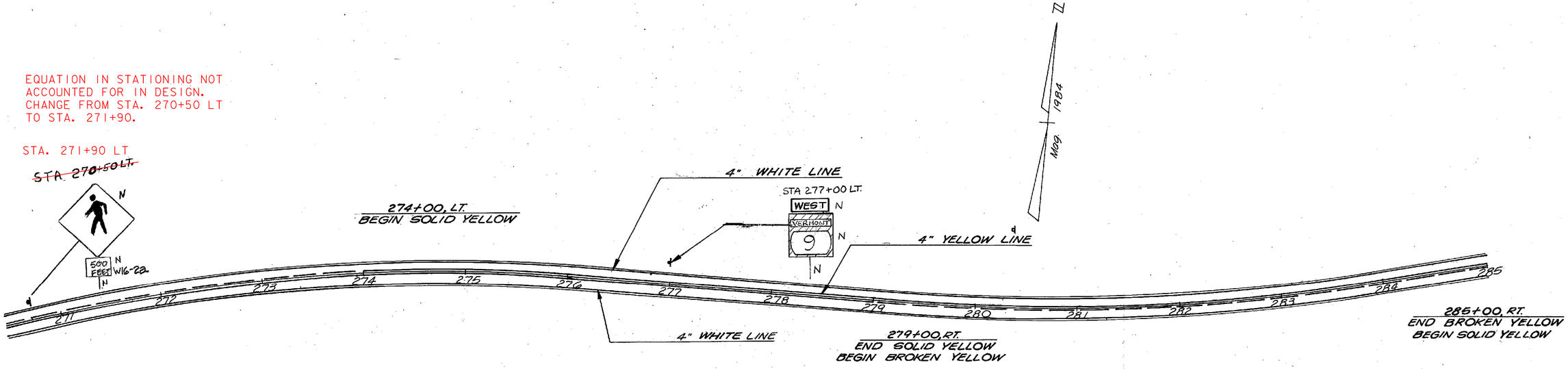

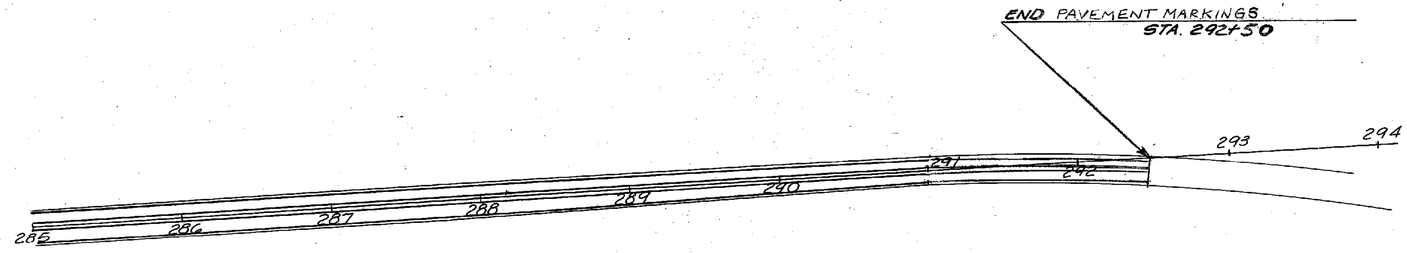

285+00, RT.
END BROKEN YELLOW
BEGIN SOLID YELLOW

TEMPORARY 4" WHITE LINE
STA. 269+00 Lt. – STA. 292+50 Lt.
STA. 269+00 Rt. – STA. 292+50 Rt.

DURABLE 4" WHITE LINE
STA. 270+50 Lt. – STA. 292+50 Lt.
STA. 270+50 Rt. – STA. 292+50 Rt.

TEMPORARY 4" YELLOW LINE
STA 269+00 ℄ – 274+00 ℄ (DASHED LT, SOLID RT)
STA 274+00 ℄ – 279+00 ℄ (SOLID DBL)
STA 279+00 ℄ – 286+00 ℄ (SOLID LT, DASHED RT)
STA. 286+00 ℄ – 292+50 ℄ (SOLID DBL)

DURABLE 4" YELLOW LINE
STA. 269+00 ℄ – 274+00 ℄ (DASHED LT, SOLID RT)
STA 274+00 ℄ – 279+00 ℄ (SOLID DBL)
STA 279+00 ℄ – 286+00 ℄ (SOLID LT, DASHED RT)
STA. 286+00 ℄ – 292+50 ℄ (SOLID DBL)

LEGEND

◂ – EXISTING SIGN

◂ – PROPOSED SIGN

N-NEW

NOT TO SCALE

SEARSBURG – WILMINGTON
NHF 010-1 (18)

PAVEMENT MARKINGS AND SIGN LOCATIONS

McFARLAND-JOHNSON ENGINEERS, INC.
BINGHAMTON NEW YORK

SCALE	DATE	SHEET
NONE	11-85	87 OF 435

DETAILED BY :
CHECKED BY :
IN CHARGE OF :
DESIGNED BY :

FORM NO. 1

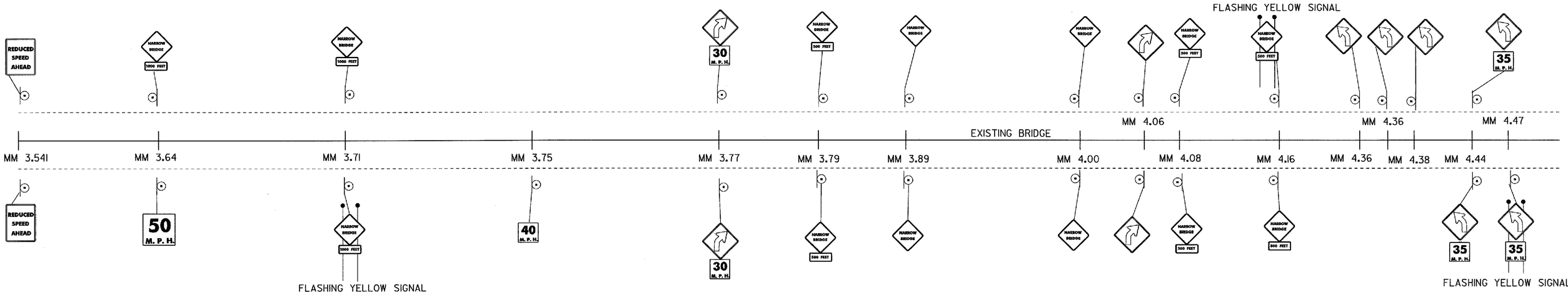

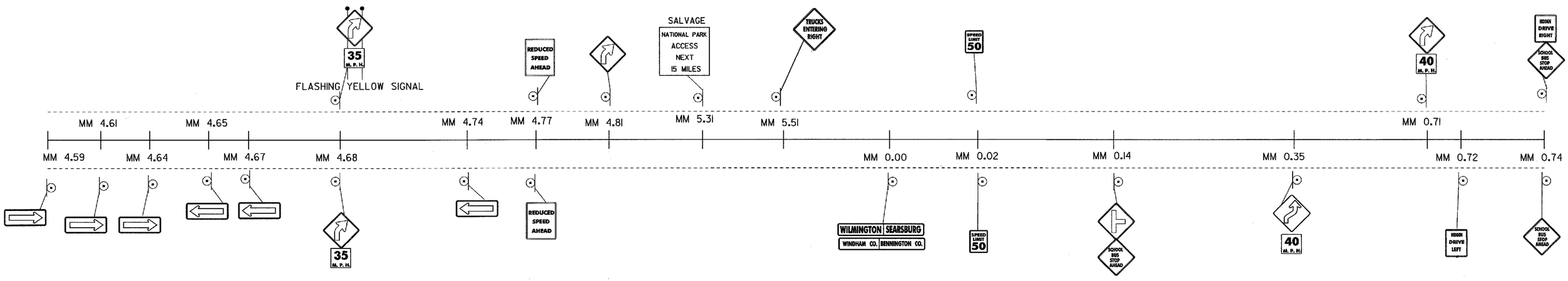

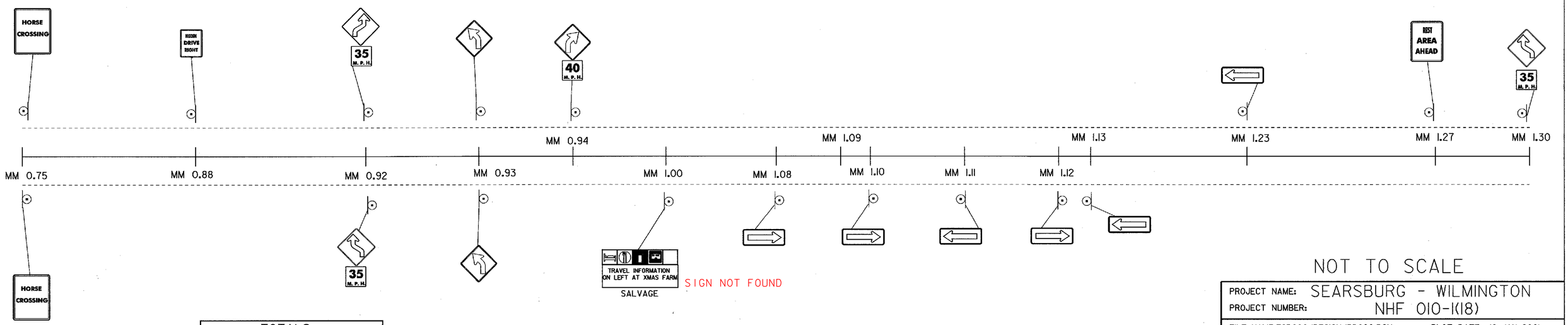

NOT TO SCALE

TOTALS
REMOVAL OF SIGNS: 89
SALVAGE SIGNS: 2

NOTE:
UNLESS SPECIFIED OTHERWISE, ALL SIGNS ON THIS SHEET SHALL BE REMOVED.
EXISTING SIGNS NOT SHOWN ON THIS SHEET SHALL BE REMOVED UNDER THE ITEM COMMON EXCAVATION.

PROJECT NAME: SEARSBURG - WILMINGTON
PROJECT NUMBER: NHF 010-1(18)

FILE NAME:78D096/DESIGN/DD096.DGN
PROJECT LEADER: DELLA SANTA
DESIGNED BY: SQUAD B
IPARM NAME: DD096EXS.I

PLOT DATE: 10-JAN-2001
DRAWN BY: SQUAD B
CHECKED BY: SQUAD B
SHEET 88 OF 435

STATE OF VERMONT
AGENCY OF TRANSPORTATION

TRAFFIC SIGN SUMMARY SHEET

MILEMARKER, STATION, OR SIGN NUMBER	SIGN LEGEND	SIGN DIMENSIONS EA	WIDTH (In)	HEIGHT (In)	NEW & SALVAGED SIGNS "A"	"B"	SALV SIGN	SALV TIS	EXIST POST RETAIN	SALVAGE	NEW SIGN POSTS NO. OF POSTS	FLANGED CHANNEL lb/ft 1.12	2.0	3.0	SQUARE STEEL (In) lb/ft 1.75 1.88	2.0 2.16	2.5 3.35	ANCHOR	SLEEVE	TUBULAR ALUMINUM Ø (In) lb/ft 3.0 1.3	4.0 1.7	4.0 MOD 1.7	TUBULAR STEEL Ø (In) FOUND-ATION	lb/ft 3.0 7.6	3.5 9.0	4.0 10.8	5.0 14.6	W-SHAPE STEEL FTG. SIZE 24"	30"	WEIGHT	POST SIZE	SIGN REFLECTIVE REQUIRED	REMARKS	SIGN DETAIL DETAIL ON SHEET NUMBER	STD. SHEET NUMBER
												OPTION ITEMS																									
101+50 RT. RTE.9	SPEED LIMIT 50	1	24"	30"	5						1			×																			R2-1		E-142
113+50 RT. RTE.9	BRIDGES FREEZE BEFORE ROAD	1	36"	36"	9						1			×																			VW-005		E-150
120+00 RT. RTE.9	EAST	1	24"	12"	2						1			×																			M3-2		E-136B
	VERMONT 9	1	24"	24"	4																														E-136B
151+00 LT. RTE.9	BRIDGES FREEZE BEFORE ROAD	1	36"	36"	9						1			×																			VW-005		E-150
182+00 LT. RTE.9	NATIONAL PARK ACCESS NEXT 15 MILES	1					1				1																					ERECT SALVAGED SIGN		
201+05 RT. RTE.9	WILMINGTON | SEARSBURG	1	60"	7.5"	3.13						1			×																			TOWN LINE		E-124
	WINDHAM CO. | BENNINGTON CO.	1	60"	7.5"	3.13																											COUNTY LINE		E-124
	0140 1416 0000	1	6"	8"	.33																											VD-700		E-138
200+05 LT. RTE.9	SPEED LIMIT 50	1	24"	30"	5						1			×																			R2-1		E-142
~~202+05~~ 200+05 RT. RTE.9	SPEED LIMIT 50	1	24"	30"	5						1			×																			R2-1		E-142
208+60 RT. RTE.9		1	30"	30"	6.25						1			×																			W2-2M		E-155
235+65 RT. RTE.9	HORSE CROSSING	1	30"	30"	6.25						1			×	INSTALL AND REMOVED AS PER JOE KELLEY. (NO LONGER NECESSARY.)																	W11-7a	NOTE: REFER TO STANDARD E-153 SIGN VW-000 SUBSITIUTE THE WORD HORSE FOR MOOSE		E-153
245+65 LT. RTE.9	HORSE CROSSING	1	30"	30"	6.25						1			×	INSTALL AND REMOVED AS PER JOE KELLEY. (NO LONGER NECESSARY.)																	W11-7a	NOTE: REFER TO STANDARD E-153 SIGN VW-000 SUBSITIUTE THE WORD HORSE FOR MOOSE		E-153
252+00 RT. RTE.9	TRAVEL INFORMATION SIGN	1						1			2			×																			ERECT SALVAGED SIGN NOT FOUND		
	TOTALS				SF 64.34	SF	EA.	SF				FT	FT	FT 127.0	FT	FT	FT		EA	LB	LB	LB	EA.	LB	LB	LB	LB	EA.	EA.	LB					

FINAL POST LENGTHS ARE TO BE DETERMINED IN THE FIELD. POST SIZES ARE COMPUTED BASED ON INFORMATION FURNISHED ON THE STANDARD SHEETS AND THE TRAFFIC & SAFETY DIVISION'S "SIGN POST DESIGN GUIDELINE."

dd096.dgn

PROJECT NAME: SEARSBURG - WILMINGTON
PROJECT NUMBER: NHF 010-1(18)

FILE NAME: dd096tsl.i
PROJECT LEADER: DELLA SANTA
DESIGNED BY: SQUAD B
PLOT DATE: 30-JAN-2002
DRAWN BY: G. MEUNIER
CHECKED BY:
SHEET 89 OF 435

STATE OF VERMONT
AGENCY OF TRANSPORTATION

TRAFFIC SIGN SUMMARY SHEET

MILEMARKER, STATION, OR SIGN NUMBER	SIGN LEGEND	SIGN DIMENSIONS EA	WIDTH (In)	HEIGHT (In)	NEW & SALVAGED SIGNS "A"	"B"	SALV SIGN	SALV TIS	EXIST POST RETAIN	SALVAGE	NEW SIGN POSTS NO. OF POSTS	FLANGED CHANNEL lb/ft 1.12	2.0	3.0	SQUARE STEEL (In) 1.75	2.0	2.5	ANCHOR	SLEEVE	TUBULAR ALUMINUM Ø (In) 3.0	4.0	4.0 MOD	TUBULAR STEEL Ø (In) FOUND-ATION	3.0	3.5	4.0	5.0	W-SHAPE STEEL FTG. SIZE 24"	30"	WEIGHT	POST SIZE	SIGN REQUIRED	REMARKS	SIGN DETAIL DETAIL ON SHEET NUMBER	STD. SHEET NUMBER
															lb/ft 1.88	2.16	3.35			lb/ft 1.3	1.7	1.7		lb/ft 7.6	9.0	10.8	14.6								
												OPTION ITEMS																								
253+50 254+00 RT. RTE.9		1	24"	24"	4						1			×																					E-132
		1	24"	6"	1																														E-132
256+50 RT. RTE.9		1	30"	30"	6.25						1			×																				WII-2		E-152
	500 FEET	1	24"	12"	2																														
261+86 LT. RTE.9		1	24"	24"	4						1			×																					E-132
		1	24"	6"	1																														E-132
262+00 RT. RTE.9		1	30"	30"	6.25						1			×																				WII-2		E-152
		1	24"	12"	2																													WI6-7		
265+00 LT. RTE.9		1	30"	30"	6.25						1			×																				WII-2		E-152
		1	24"	12"	2																													WI6-7		
271+90 ~~270+50~~ LT. RTE.9		1	30"	30"	6.25						1			×	FIELD CHANGE - 500' FROM CROSS WALK																				WII-2		E-152
	500 FEET	1	24"	12"	2																													WI6-2a		
277+00 LT. RTE.9	WEST	1	24"	12"	2						1			×																						E-136B
	VERMONT 9	1	24"	24"	4																															E-136B
												FT	FT	90.0	FT	FT	FT		EA	LB	LB	LB		LB	LB	LB	LB								
	TOTALS				SF 49.00	SF	EA.	SF				FT 90.0			FT					LB			EA.	LB				EA.	EA.	LB					

FINAL POST LENGTHS ARE TO BE DETERMINED IN THE FIELD. POST SIZES ARE COMPUTED BASED ON INFORMATION FURNISHED ON THE STANDARD SHEETS AND THE TRAFFIC & SAFETY DIVISION'S "SIGN POST DESIGN GUIDELINE."

dd096.dgn

PROJECT NAME: SEARSBURG - WILMINGTON
PROJECT NUMBER: NHF 010-1(18)

FILE NAME: dd096ts2.1
PROJECT LEADER: DELLA SANTA
DESIGNED BY: SQUAD B
PLOT DATE: 30-JAN-2002
DRAWN BY: G. MEUNIER
CHECKED BY:
SHEET 90 OF 435

STATE OF VERMONT
AGENCY OF TRANSPORTATION

TRAFFIC SIGN SUMMARY SHEET

MILEMARKER, STATION, OR SIGN NUMBER	SIGN LEGEND	SIGN DIMENSIONS EA	WIDTH (In)	HEIGHT (In)	NEW & SALVAGED SIGNS "A"	"B"	SALV SIGN	SALV TIS	EXIST POST RETAIN	SALVAGE	NEW SIGN POSTS NO. OF POSTS	FLANGED CHANNEL lb/ft 1.12	2.0	3.0	SQUARE STEEL (in) lb/ft 1.75 1.88	2.0 2.16	2.5 3.35	ANCHOR	SLEEVE	TUBULAR ALUMINUM Ø (in) lb/ft 3.0 1.3	4.0 1.7	4.0 MOD 1.7	TUBULAR STEEL Ø (in) FOUNDATION	lb/ft 3.0 7.6	3.5 9.0	4.0 10.8	5.0 14.6	W-SHAPE STEEL FTG. SIZE 24"	30"	WEIGHT	POST SIZE	SIGN REQUIRED	REMARKS	SIGN DETAIL DETAIL ON SHEET NUMBER	STD. SHEET NUMBER
												OPTION ITEMS																								
	ROUTE 9 WEST CONNECTOR																																			
20+30 RT.	LEGAL LOAD AS FOR STATE HIGHWAYS	1	24"	30"	5						1			×																			VR-079		E-141
20+40 LT.	STOP	1	30"	30"	6.25						1			×																			RI-1		E-143
20+80 RT.	NO OUTLET	1	30"	30"	6.25						1			×																				92	
24+00 LT.		1	36"	36"	9						1			×																			W3-1A		E-150
	TOWN HIGHWAY 31																																		
20+20 RT.	LEGAL LOAD LIMIT 24,000 POUNDS	1	24"	30"	5						1			×																			VR-017		E-141
20+20 LT.	STOP	1	30"	30"	6.25						1			×																			RI-1		E-143
	ROUTE 9																																		
200' PAST 292+50	CARPOOL	1									2			X																						

STATE OF VERMONT
AGENCY OF TRANSPORTATION

TRAFFIC SIGN SUMMARY SHEET

MILEMARKER, STATION, OR SIGN NUMBER	SIGN LEGEND	SIGN DIMENSIONS EA	WIDTH (In)	HEIGHT (In)	NEW & SALVAGED SIGNS "A"	"B"	SALV SIGN	SALV TIS	EXIST POST RETAIN	SALVAGE	NEW SIGN POSTS NO. OF POSTS	FLANGED CHANNEL lb/ft 1.12	2.0	3.0	SQUARE STEEL (in) lb/ft 1.75 1.88	2.0 2.16	2.5 3.35	ANCHOR	SLEEVE	TUBULAR ALUMINUM Ø (In) lb/ft 3.0 1.3	4.0 1.7	4.0 MOD 1.7	TUBULAR STEEL Ø (In) FOUNDATION	3.0 7.6	3.5 9.0	4.0 10.8	5.0 14.6	W-SHAPE STEEL FTG. SIZE 24"	30"	WEIGHT	POST SIZE	SIGN REQUIRED	REMARKS	SIGN DETAIL DETAIL ON SHEET NUMBER	STD. SHEET NUMBER
ROUTE 9 EAST CONNECTOR												OPTION ITEMS																							
10+20 RT.	LEGAL LOAD LIMIT 24,000 POUNDS	1	24"	30"	5						1			×																				VR-017		E-141
10+20 LT.	STOP	1	30"	30"	6.25						1			×																				RI-1		E-143
OLD RT. 9	PROHIBITED OVERNIGHT CAMPING UNATTENDED VEHICLES COMMERCIAL ENTERPRISES	1	30"	24"	5						1			×																				VR-032	SEE SHT.86	E-144
OLD RT. 9	PROHIBITED OVERNIGHT CAMPING UNATTENDED VEHICLES COMMERCIAL ENTERPRISES	1	30"	24"	5						1			×																				VR-032	SEE SHT.86	E-144
	EAST DRIVE CONNECTOR																																		
20+20 RT.	LEGAL LOAD LIMIT 24,000 POUNDS	1	24"	30"	5						1			×																				VR-017		E-141
20+20 LT.	STOP	1	30"	30"	6.25						1			×																				RI-1		E-143
ENTRANCE CATAMOUNT TRAIL	NO MOTOR VEHICLES / NO MOTOR VEHICLES	2	24"	24"	8						2			×																				POST TO BE PLACED LT. & RT. AT ENTRANCE OF CATAMOUNT TRAIL.	SEE SHT.92	

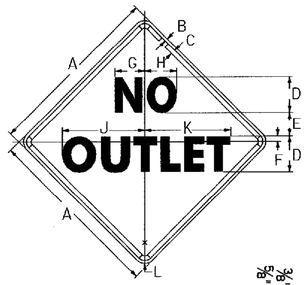

W14-2

SIGN	DIMENSIONS (INCHES) A	B	C	D	E	F	G	H	J	K	L
MIN.	24	3/8	5/8	5D	3	3/4	4 1/8	4 1/2	11 5/8	12 1/16	1 1/2
STD.	30	1/2	3/4	6D	4	15/16	5	5 3/8	13 15/16	14 1/2	1 7/8
SPEC.	36	5/8	7/8	7D	5	1 1/8	5 7/8	6 1/4	16 1/4	16 15/16	2 1/4

COLORS
LEGEND - BLACK (NON-REFL)
BACKROUND - YELLOW (REFL)

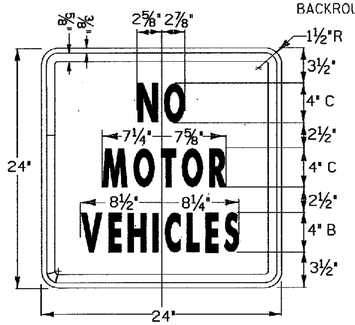

R5-3
COLORS
BLACK TEXT & BORDER
WITH WHITE BACKGROUND

FINAL POST LENGTHS ARE TO BE DETERMINED IN THE FIELD. POST SIZES ARE COMPUTED BASED ON INFORMATION FURNISHED ON THE STANDARD SHEETS AND THE TRAFFIC & SAFETY DIVISION'S "SIGN POST DESIGN GUIDELINE."

	SF	SF	EA.	SF		FT	FT	FT	FT	FT	FT		EA	LB	LB	LB	LB	LB	LB	LB	EA.	EA.	LB
						78.0																	
SHEET TOTALS	40.50					78.0		FT		LB	EA.	LB									EA.	EA.	LB
GRAND TOTALS	191.59					~~351.0~~ 472.5																	

dd096.dgn

PROJECT NAME: SEARSBURG - WILMINGTON
PROJECT NUMBER: NHF 010-1(18)

FILE NAME: dd096ts4.1
PROJECT LEADER: DELLA SANTA
DESIGNED BY: SQUAD B
PLOT DATE: 16-FEB-2002
DRAWN BY: G. MEUNIER
CHECKED BY:
SHEET 92 OF 435

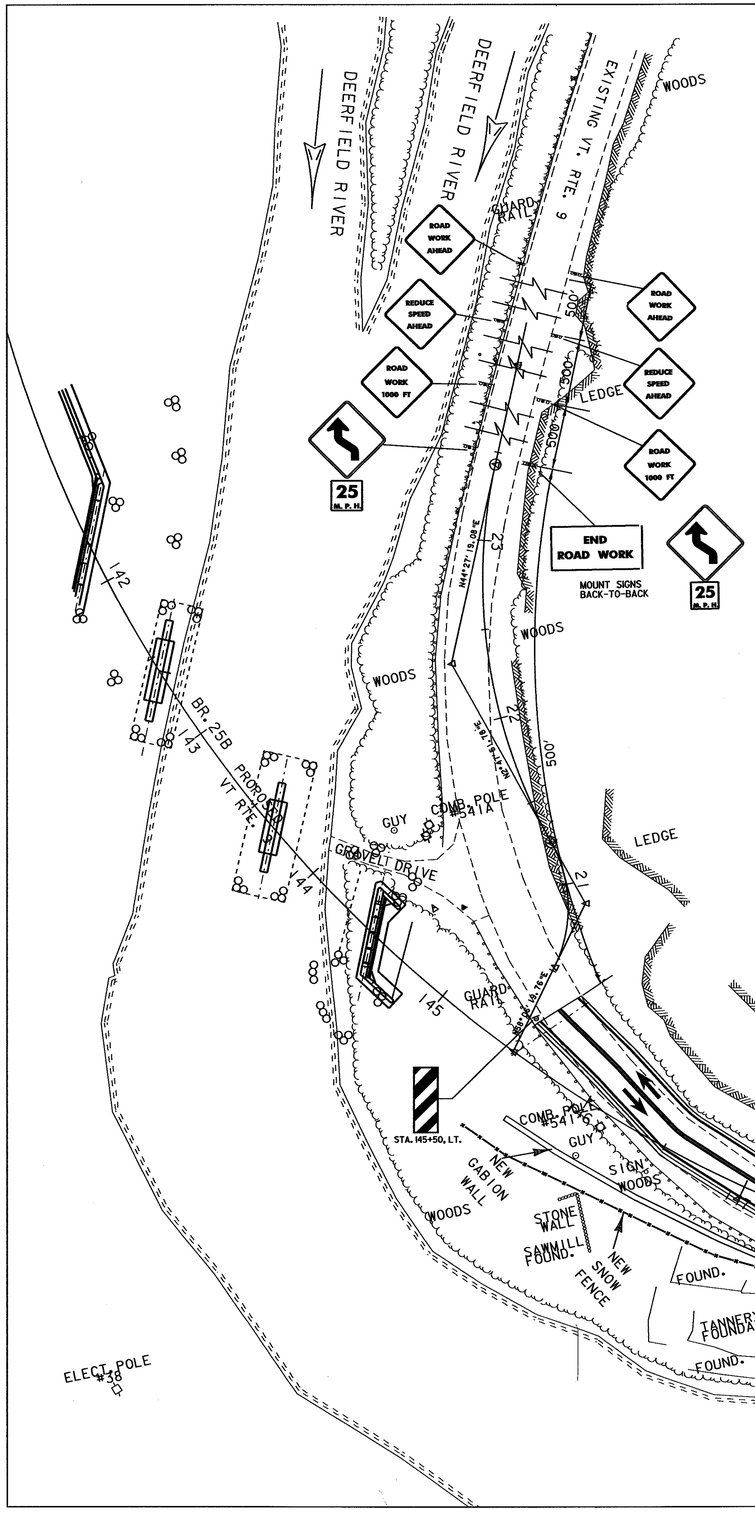

646.60 TEMPORARY 4" WHITE LINE

STA. 145+53 - STA. 152+72 SOLID LT & RT (EDGE LINE)

646.61 TEMPORARY 4" YELLOW LINE

STA. 145+58 - STA. 152+70 DOUBLE SOLID ℄

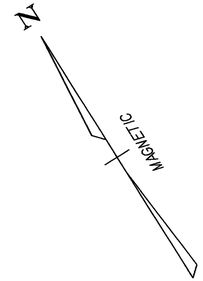

NOTE: THE ACTUAL WORK ZONE SIGNING FOR THE GABION WALL CONSTRUCTION SHALL BE DETERMINED BY THE RESIDENT ENGINEER.

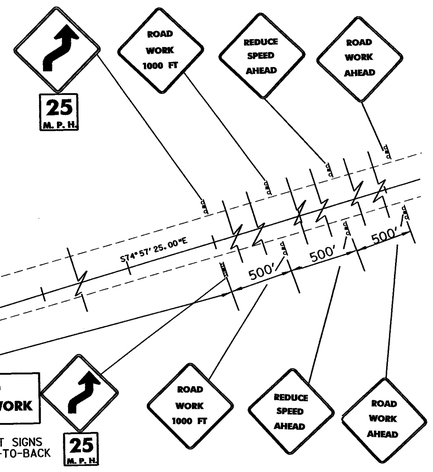

0 40 80
SCALE IN FEET

GABION WALL DETOUR TRAFFIC CONTROL PLAN

dd096det.1

PROJECT NAME: SEARSBURG - WILMINGTON
PROJECT NUMBER: NHF 010-1(18)

FILE NAME: m:/design/78d096/dd096det.dgn PLOT DATE: 16-FEB-2002
PROJECT LEADER: DELLA SANTA DRAWN BY: SQUAD B
DESIGNED BY: SQUAD B CHECKED BY:
SHEET 93 OF 435

BRIDGE 24 SHEETS

SHEETS	BRIDGE SHEETS	SHEET TITLE
	BRI00	PLAN - BR 24
	BRI01	PRELIMINARY INFORMATION - BR 24
	BRI02	PROFILE - BR 24
	BRI03	EAST AND WEST ELEVATIONS - BR 24
	BRI04	BRIDGE QUANTITIES - BR 24
	BRI05	BORING INFORMATION - BR 24
	BRI06	BORING LOGS - BR 24
	BRI07	STAGE I CONSTRUCTION DETAILS - BR 24
	BRI08	STAGE 2 CONSTRUCTION DETAILS - BR 24
	BRI09	NORTH ABUTMENT PLAN AND ELEVATION - BR 24
	BRI10	SOUTH ABUTMENT PLAN AND ELEVATION - BR 24
	BRI11	FOOTING PLANS AND SECTIONS - BR 24
	BRI12	WINGWALL DETAILS - BR 24
	BRI13	PRECAST PCC SPAN UNIT DETAILS - BR 24
	BRI14	REINFORCEMENT STEEL SCHEDULE - BR 24

BRIDGE 25 SHEETS

SHEETS	BRIDGE SHEETS	SHEET TITLE
	BR200	PLAN AND ELEVATION - BR 25
	BR201	PRELIMINARY INFORMATION - BR 25
	BR202	ESITMATE OF QUANTITIES - BR 25
	BR203	PROFILE - BR 25
	BR204	BORING INFORMATION - BR 25
	BR205	BORING LOGS - BR 25
	BR205A	BORING LOGS - BR 25
	BR206	SHEET NOT USED
	BR207	TRANSVERSE SECTION - BR 25
	BR208	DECK REINFORCEMENT PLAN - BR 25
	BR209	DECK RAILING PLAN - BR 25
	BR210	APPROACH SLAB DETAILS - BR 25
	BR211	FRAMING PLAN - BR 25
	BR212	GIRDER ELEVATION - BR 25
	BR213	CAMBER & DEAD LOAD DEFLECTION - BR 25
	BR214	GIRDER DETAILS - BR 25
	BR215	GIRDER SPLICE - 1 - BR 25
	BR215A	GIRDER SPLICE - 2 - BR 25
	BR216	ABUTMENT 1 EXPANSION JOINT LAYOUT - BR 25
	BR217	CROSSFRAME DETAILS - 1 - BR 25
	BR218	CROSSFRAME DETAILS - 2 - BR 25
	BR219	SHEET NOT USED
	BR220	ABUTMENT 1 PLAN - BR 25
	BR221	ABUTMENT 1 ELEVATION - BR 25
	BR222	ABUTMENT 1 FOOTING REINFORCING PLAN - BR 25
	BR223	ABUTMENT 1 REINFORCING - BR 25
	BR224	ABUTMENT 1 REINFORCING ELEVATION - BR 25
	BR225	ABUTMENT 1 WINGWALL REINFORCING - BR 25.
	BR226	ABUTMENT 2 PLAN - BR 25
	BR227	ABUTMENT 2 ELEVATION - BR 25
	BR228	ABUTMENT 2 FOOTING REINFORCING PLAN - BR 25
	BR229	ABUTMENT 2 REINFORCING - BR 25
	BR230	ABUTMENT 2 REINFORCING - BR 25
	BR231	ABUTMENT 2 WINGWALL REINFORCING - BR 25
	BR232	PIER 1 PLAN & ELEVATION - BR 25
	BR233	PIER 1 REINFORCING - BR 25
	BR234	PIER 2 PLAN & ELEVATION - BR 25
	BR235	PIER 2 REINFORCING - BR 25
	BR236	DRILL SHAFT - BR 25
	BR237	SHEET NOT USED
	BR238	SHEET NOT USED
	BR239	SHEET NOT USED
	BR240	REINFORCEMENT STEEL SCHEDULE 1 - BR 25
	BR241	REINFORCEMENT STEEL SCHEDULE 2 - BR 25

BRIDGE 25A SHEETS

SHEETS	BRIDGE SHEETS	SHEET TITLE
	BR300	PLAN AND ELEVATION - BR 25A
	BR301	PRELIMINARY INFORMATION - BR 25A
	BR302	ESTIMATE OF QUANTITIES - BR 25A
	BR303	PROFILE - BR 25A
	BR304	BORING INFORMATION - BR 25A
	BR305	BORING LOGS - BR 25A
	BR306	SHEET NOT USED
	BR307	TRANSVERSE SECTION - BR 25A
	BR308	DECK REINFORCING PLAN - BR 25A
	BR309	RAILING LAYOUT PLAN - BR 25A
	BR310	APPROACH SLAB DETAILS - BR 25A
	BR311	FRAMING PLAN - BR 25A
	BR312	GIRDER ELEVATION - BR 25A
	BR313	CAMBER & DEAD LOAD DEFLECTION - BR 25A
	BR314	GIRDER DETAILS - BR 25A
	BR315	GIRDER SPLICE - BR 25A
	BR315A	GIRDER SPLICE - BR 25A
	BR316	CROSSFRAME DETAILS - 1 - BR 25A
	BR317	CROSSFRAME DETAILS - 2 - BR 25A
	BR318	ABUTMENT 1 EXPANSION JOINT - BR 25A
	BR319	ABUTMENT 2 EXPANSION JOINT - BR 25A
	BR320	ABUTMENT 1 PLAN - BR 25A
	BR321	ABUTMENT 1 ELEVATION - BR 25A
	BR322	ABUTMENT 1 FOOTING REINFORCING - BR 25A
	BR323	ABUTMENT 1 REINFORCING - BR 25A
	BR324	ABUTMENT 1 REINFORCING ELEVATION - BR 25A
	BR325	SHEET NOT USED
	BR326	ABUTMENT 1 WINGWALL REINF. SECTS. - BR 25A
	BR327	ABUTMENT 2 PLAN - BR 25A
	BR328	ABUTMENT 2 ELEVATION - BR 25A
	BR329	ABUTMENT 2 FOOTING REINFORCING - BR 25A
	BR330	ABUTMENT 2 REINFORCING - BR 25A
	BR331	ABUTMENT 2 REINFORCING ELEVATION - BR 25A
	BR332	ABUTMENT 2 WINGWALL REINFORCING - BR 25A
	BR333	PIER 1 PLAN & ELEVATION - BR 25A
	BR334	PIER 1 REINFORCING - BR 25A
	BR335	SHEET NOT USED
	BR336	PIER 1 DRILLED SHAFT - BR 25A
	BR337	SHEET NOT USED
	BR338	REINFORCEMENT STEEL SCHEDULE 1 - BR 25A
	BR339	REINFORCEMENT STEEL SCHEDULE 2 - BR 25A

BRIDGE 25B SHEETS

SHEETS	BRIDGE SHEETS	SHEET TITLE
	BR400	PRELIMINARY INFORMATION - BR 25B
	BR401	QUANTITY SHEET - BR 25B
	BR402	PLAN, ELEVATION AND GENERAL NOTES - BR 25B
	BR403	BORING LOGS - BR 25B
	BR404	TYPICAL SECTION - BR 25B
	BR405	DECK REINFORCING - BR 25B
	BR406	FRAMING PLAN - BR 25B
	BR407	GIRDER DETAILS - BR 25B
	BR408A	EXPANSION JOINT DETAILS - BR 25B
	BR408B	EXPANSION JOINT PLAN - BR 25B
	BR408C	CURB PLATE DETAILS - BR 25B
	BR409A	LEFT CURB PLATE DETAILS - BR 25B
	BR409B	RIGHT DURB PLATE DETAILS - BR 25B
	BR409C	DOWNSPOUT DETAILS - BR 25B
	BR410	EXPANSION BEARING DETAILS - BR 25B
	BR411	FIXED BEARING DETAILS - BR 25B
	BR412	BEARING TABLES - BR 25B
	BR413	MISCELLANEOUS DETAILS - BR 25B
	BR414	ABUTMENT 1 PLAN - BR 25B
	BR415	ABUTMENT 1 FOOTING PLAN - BR 25B
	BR416	ABUTMENT 1 ELEVATION - BR 25B
	BR417	ABUTMENT 1 WINGWALL ELEVATIONS - BR 25B
	BR418	ABUTMENT 1 SECTIONS - BR 25B
	BR419	APPROACH SLAB 1 DETAILS - BR 25B
	BR420	ABUTMENT 2 PLAN, ELEVATION & SECTION - BR 25B
	BR421	WINGWALL 3 & 4 ELEVATIONS AND SECTION - BR 25B
	BR422	APPROACH SLAB 2 DETAILS - BR 25B
	BR423	PIER 1 PLAN AND ELEVATION - BR 25B
	BR424	PIER 2 PLAN AND ELEVATION - BR 25B
	BR425	DRILLED SHAFT DETAILS - BR 25B
	BR426	REINFORCING STEEL SCHEDULE 1 - BR 25B
	BR427	REINFORCING STEEL SCHEDULE 2 - BR 25B

STATE OF VERMONT
AGENCY OF TRANSPORTATION

Town Of SEARSBURG	Bridge No.
Highway No. VT. RTE. 9	Log Sta. / Surv. Sta.
VT. RTE. 9 OVER DEERFIELD RIVER	
INDEX OF SHEETS	
Designed By D. VIENI	Drawn by K. DETRICK/WM WEATHERBY
Checked By M. OLSTAD Date 2/2002	Bridge Design Supervisor M. OLSTAD Date 2/2002
PROJECT SEARSBURG - WILMINGTON	PROJECT NO. NHF 010-(18)
I.G.C. Info.	
Bridge Sheet No. BR2	Sheet 96 OF 435

CLOUGH, HARBOUR & ASSOCIATES LLP
ENGINEERS, SURVEYORS, PLANNERS & LANDSCAPE ARCHITECTS
11 WINNERS CIRCLE ALBANY, NEW YORK, 12205

FILE NAME =n:\784096\structures\consultant 022002\15\brdg_tap\index.dgn
DATE/TIME =28-FEB-2002
USER =GRay

GENERAL NOTES:

ALL MATERIAL AND CONSTRUCTION SHALL CONFORM TO STATE OF VERMONT AGENCY OF TRANSPORTATION "STANDARD SPECIFICATIONS FOR CONSTRUCTION" 1990 AND ITS LATEST REVISIONS, AND AASHTO "STANDARD SPECIFICATIONS FOR HIGHWAY BRIDGES" 16th EDITION AND ITS LATEST REVISIONS.

DESIGN IS FOR HS-25 LOADING APPLIED IN ACCORDANCE WITH THE PROVISIONS OF AASHTO STANDARD SPECIFICATIONS.

ANY REFERENCE TO "LEFT" AND/OR "RIGHT" ON THE PLANS OR IN THE NOTES REFER TO THE DIRECTION OF STATIONING AND NOT THE DIRECTION OF TRAFFIC.

FIELD CONNECTIONS SHALL BE MADE WITH 7/8" Ø, AASHTO M164M, TYPE 3 BOLTS, EXCEPT IN AREAS OF PAINTED STEEL, WHERE TYPE I GALVANIZED BOLTS SHALL BE USED. HOLES SHALL BE 15/16" Ø DIAMETER. CONNECTIONS NOT DESIGNED SHALL BE DETAILED BY THE FABRICATOR AND SUBMITTED TO THE STATE FOR APPROVAL.

WHERE CONNECTIONS ARE NOT DETAILED ON THE VAOT PLANS, THEY SHALL BE DETAILED BY THE FABRICATOR AND SUBMITTED TO THE STRUCTURES ENGINEER FOR APPROVAL.

ALL WELDING AND DIMENSIONAL TOLERANCES OF WELDED MEMBERS SHALL CONFORM TO THE LATEST ANSI/AASHTO/AWS BRIDGE WELDING CODE AND ITS LATEST REVISIONS.

ANY FORM BRACKET HOLES (IF REQUIRED) IN FASCIA GIRDERS SHALL BE FILLED WITH BUTTONHEAD OR HEX-HEAD BOLTS. TYPE 3. FORM BRACKETS SHALL BE DESIGNED BY THE CONTRACTOR - FLEMING BRACKETS OF SIMILAR FALSEWORK SHALL BE SPACED AT A MAXIMUM OF FOUR (4) FEET.

ALL REINFORCING STEEL SHALL BE DETAILED AND FABRICATED USING PROCEDURES IN ACCORDANCE WITH APPLICABLE PUBLICATIONS OF THE CONCRETE REINFORCING STEEL INSTITUTE.

REINFORCEMENT PLACING TOLERANCES SHALL BE:
SPACING +/- 1"
CLEARING +/- 1/4"

MINIMUM COVER FOR REINFORCING STEEL (EXCEPT IN THE DECK) SHALL BE 2" IN BACK FACES OF SUBSTRUCTURES AGAINST EARTH, 4" IN PIER COLUMNS AND CAP BEAMS, AND 3" ELSEWHERE, UNLESS OTHERWISE SHOWN.

FLAME CUTTING OF EPOXY COATED REINFORCING STEEL SHALL NOT BE PERMITTED.

ALL EXPOSED EDGES OF CONCRETE IN THE SUBSTRUCTURE AND THE SUPERSTRUCTURE SHALL BE CHAMFERED 1" x 1", UNLESS OTHERWISE SHOWN.

ABUTMENT CONCRETE (ABOVE THE ADJACENT BRIDGE SEAT ELEVATIONS) SHALL NOT BE PLACED UNTIL GIRDERS HAVE BEEN ERECTED, BEAM PROFILES HAVE BEEN TAKEN, AND FINAL FINISH GRADE OF DECK IS ESTABLISHED BY THE ENGINEER.

IN ALL HORIZONTAL AND VERTICAL CONSTRUCTION JOINTS, SHEAR KEYS SHALL BE FORMED AS SHOWN IN THE TYPICAL BRIDGE DETAILS, BRIDGE SHEET BR-15, AND THEY SHALL BE CONTINUED UP TO 3" FROM EACH END OF THE JOINT. THE UPWARD KEY SHALL BE PLACED INTEGRAL WITH THE CONCRETE BELOW THE JOINT.

HORIZONTAL AND VERTICAL CONCRETE CONSTRUCTION JOINTS SHALL BE MONOLITHIC AND CONTINUOUS FOR THE FULL LENGTH OF JOINT.

POLYURETHANE JOINT SEALER SHALL BE USED IN CURB CONSTRUCTION JOINTS OR AT FIXED CURB JOINTS AS DIRECTED BY THE ENGINEER, IN ACCORDANCE WITH THE CURB JOINT DETAIL SHOWN IN THE TYPICAL BRIDGE DETAILS, BRIDGE SHEET BR-15.

THE COST OF INSTALLING PVC WATERSTOPS, AS SHOWN IN THE PLANS, SHALL BE SUBSIDIARY ITEM 501.25, "CONCRETE CLASS B" (HPC-B). THE TYPE OF PVC WATERSTOP TO BE USED SHALL BE SUBMITTED BY THE CONTRACTOR TO THE ENGINEER FOR APPROVAL.

TEMPORARY EROSION CONTROL MEASURES SHALL INCLUDE PLACEMENT OF SILT FENCE, HAY BALES AND EROSION CONTROL MATTING AROUND WINGWALLS, ABUTMENTS AND PIERS WHERE EXCAVATION AND BACKFILL IS PERFORMED, AS DIRECTED BY THE ENGINEER.

THE CONTRACTOR SHALL CALL "DIG-SAFE" PRIOR TO PERFORMING ANY EXCAVATION, IN ACCORDANCE WITH DIG-SAFE'S RULES OF NOTIFICATION. THE COST OF COORDINATING WITH DIG-SAFE AND THE FOLLOWING UTILITY COMPANIES SHALL BE SUBSIDIARY TO ITEM 635.10, "MOBILIZATION". VERIZON, GREEN MOUNTAIN POWER CORP. AND NOVA CABLE. THE COST OF ANY EXPLORATORY EXCAVATION BY THE CONTRACTOR TO ASCERTAIN UTILITY LOCATIONS SHALL BE PAID FOR UNDER ITEM 204.20, "TRENCH EXCAVATION OF EARTH" IN ACCORDANCE WITH THE SPECIAL PROVISIONS. ANY DAMAGE TO UTILITIES CAUSED BY THE CONTRACTOR SHALL BE REPAIRED IMMEDIATELY AS DIRECTED BY THE RESPECTIVE UTILITY COMPANY TO THE ENGINEER AT THE CONTRACTOR'S OWN EXPENSE.

WATER REPELLENT SHALL BE APPLIED TO ALL EXPOSED CONCRETE SURFACES EXCEPT THE UNDERSIDE OF DECK BETWEEN DRIP NOTCHES.

JOINTS AND SCORE MARKS SHALL BE CONSTRUCTED AS INDICATED ON THE PLANS OR AS DIRECTED BY THE ENGINEER.

STONE FILL SHALL BE PLACED IN FRONT OF THE ABUTMENTS BEFORE SUPERSTRUCTURE STEEL IS PLACED.

ALL STRUCTURAL STEEL SHALL CONFORM TO AASHTO DESIGNATION M270, GRADE 50W, EXCEPT AS NOTED IN THE PLANS.

ALL STRUCTURAL STEEL SHALL CONFORM TO AASHTO M270 GR 50W (UNPAINTED). ALL STRUCTURAL STEEL SHALL BE DETAILED AND FABRICATED USING PROCEDURES AND TOLERANCES IN ACCORDANCE WITH APPLICABLE PUBLICATIONS OF THE AMERICAN INSTITUTE OF STEEL CONSTRUCTION (AISC).

AFTER SUPERSTRUCTURE STEEL HAS BEEN ERECTED, ELEVATIONS ALONG THE TOP OF BEAMS SHALL BE TAKEN AS DIRECTED BY THE ENGINEER FOR USE IN COMPARING TO DESIGN BEAM PROFILES.

ANY HOLES IN FASCIA BEAMS OR FASCIA GIRDER WEBS NOT OTHERWISE FILLED SHALL BE FILLED WITH BUTTON HEAD OF HEX HEAD BOLTS.

SHALL BE CLASS A QC/QA "QC/QA." CURB CONCRETE
DECK CONCRETE ~~AND APPROACH SLAB CONCRETE SHALL BE "CONCRETE, CLASS A". CURB CONCRETE~~ SHALL BE "CONCRETE CLASS A" (HPC-A) CONCRETE. ALL OTHER CONCRETE SHALL BE "CONCRETE, CLASS B" (HPC-B).

SURFACES OF BRIDGE SEATS UNDER BEARING DEVICES SHALL BE LEVEL WITH A CONSTRUCTION TOLERANCE OF 0.005 RADIANS. OTHER BRIDGE SEAT AREAS SHALL BE SLOPED 1/2" PER FOOT. ABUTMENT SEATS SHALL BE SLOPED FULL WIDTH TOWARD CENTER SPAN. THE ENTIRE BRIDGE SEAT SURFACE SHALL BE SMOOTH STEEL TROWEL FINISHED.

HORIZONTAL AND VERTICAL CONCRETE CONSTRUCTION JOINTS (NOT TO SCALE) SHALL BE MONOLITHIC AND CONTINUOUS FOR THE FULL LENGTH OF JOINT.

ALL DIMENSIONS ARE HORIZONTAL OR VERTICAL, AND ARE GIVEN AT 68 DEGREES F.

BORINGS INDICATED ON THESE PLANS HAVE BEEN MADE FOR DESIGN PURPOSES ONLY AND DO NOT WARRANT ACTUAL SUB-SURFACE CONDITIONS.

DRILLED SHAFT

1. DRILLED SHAFT FOUNDATION SHALL HAVE A MINIMUM 3.0 FACTOR OF SAFETY WITH RESPECT TO BEARING CAPACITY FAILURE.
2. DRILLED SHAFTS FOUNDED IN SCHIST BEDROCK ARE DESIGNED FOR A MAXIMUM ALLOWABLE BEARING PRESSURE OF 40 TSF.
3. DRILLED SHAFT BEARING ON BEDROCK SHALL BE SOCKETED INTO BEDROCK A MINIMUM OF ONE SHAFT DIAMETER.
4. DRILLED SHAFTS FOUNDED IN SOIL ARE DESIGNED FOR A MAXIMUM ALLOWABLE END BEARING PRESSURE OF 10 TSF AND SIDE FRICTION RESISTANCE WHERE $B = 1.5 - 0.135z^{0.5}$ WHERE B $(1.2 > B \geq 0.25)$
5. THE DRILLED SHAFT SHOULD BE ADVANCED WITH STEEL CASING TO MAINTAIN SIDEWALL INTEGRITY AND TO MITIGATE THE POTENTIAL FOR SOIL COLLAPSE INTO THE SHAFT EXCAVATION. THE CASING SHALL BE REMOVED FROM THE SHAFT EXCAVATION WHILE A STATIC HEAD OF CONCRETE IS MAINTAINED WITHIN THE CASING TO PREVENT GRANULAR TILL SOIL AND COARSE RIVER SEDIMENTS FROM COLLAPSING INTO THE SHAFT AND CREATING INCLUSION. CASING REMOVAL MUST ALSO BE PERFORMED IN A MANNER THAT AVOIDS THE TENDENCY FOR LIFTING OF CONCRETE UPON CASING REMOVAL, WHICH MAY RESULT IN VOIDS OR INCLUSIONS OF SOIL IN THE SHAFT.
6. THE BOTTOM OF THE DRILLED SHAFTS SHOULD BE CAREFULLY CLEANED PRIOR TO PLACING CONCRETE.
7. THE CONTRACTOR SHALL ENSURE THAT THE CONCRETE FLOWS AROUND AND FULLY SURROUNDS THE CAGE. CONCRETE SHOULD BE A SPECIAL DESIGN HAVING HIGH SLUMP. THE CASING USED FOR SHAFT EXCAVATION SHOULD NOT BE PULLED UNTIL THE EXCAVATION HAS BEEN COMPLETELY BACKFILLED WITH CONCRETE OR UNTIL A SUFFICIENT HEAD OF CONCRETE EXISTS TO PREVENT VOIDS OR INCLUSIONS OF SOIL IN THE SHAFT.

FOUNDATION

1. SPREAD FOOTING SHALL BE CONSTRUCTED ON A 1'-6" THICK MAT OF GRANULAR BACKFILL FOR STRUCTURES, ITEM 204.30.
2. GRANULAR BACKFILL SHALL BE COMPACTED TO 95 PERCENT OF MAXIMUM DRY DENSITY.

FILE NAME =\\97SFS\MSTNV1S\BR-dg_TYP\gennotes.plt
DATE/TIME =12/13/01
USER =564

STATE OF VERMONT
AGENCY OF TRANSPORTATION

Town Of	SEARSBURG	Bridge No. 258	
Highway No.	VT. RTE. 9	Log Sta.	
		Surv. Sta.	

VT. RTE. 9 OVER DEERFIELD RIVER

GENERAL NOTES

Designed By D. VIENI	Drawn by K. DETRICK
Checked By M. OLSTAD Date 12/2001	Bridge Design Supervisor M. OLSTAD Date 12/2001
PROJECT SEARSBURG - WILMINGTON	PROJECT NO. NHF 010-1(18)
L.G.C. info.	
Bridge Sheet No. BR3	Sheet 97 OF 425

CHA CLOUGH, HARBOUR & ASSOCIATES LLP
ENGINEERS, SURVEYORS, PLANNERS & LANDSCAPE ARCHITECTS
11 WINNERS CIRCLE ALBANY, NEW YORK, 12205

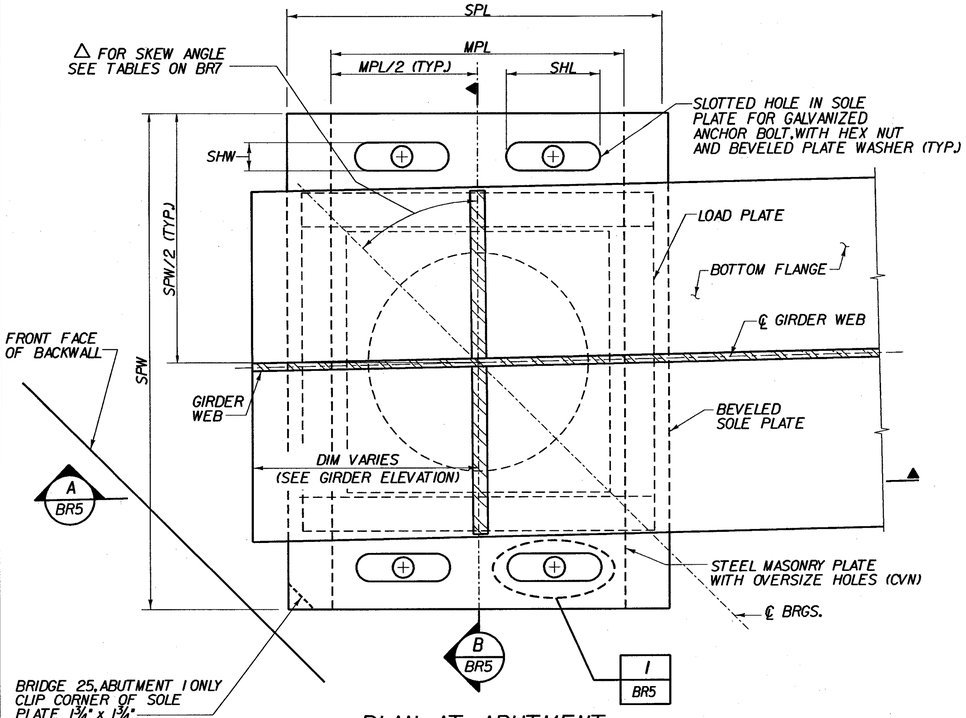

PLAN AT ABUTMENT
(NOT TO SCALE)

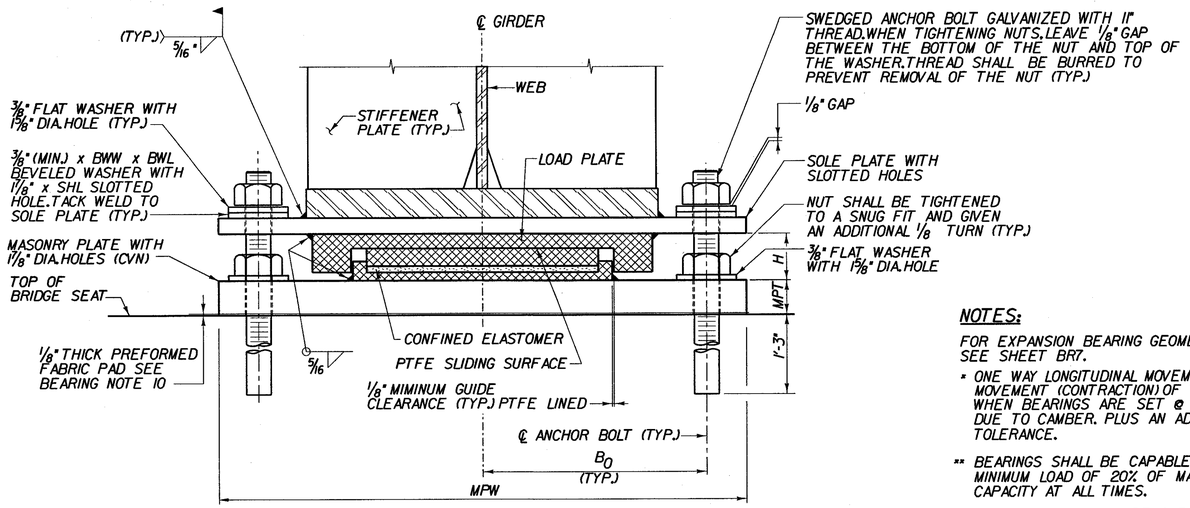

B BR5 EXPANSION BEARING
(NOT TO SCALE)

NOTES:

FOR EXPANSION BEARING GEOMETRY TABLES, SEE SHEET BR7.

* ONE WAY LONGITUDINAL MOVEMENT IS THE MAXIMUM MOVEMENT (CONTRACTION) OF THE SUPERSTRUCTURE WHEN BEARINGS ARE SET @ 45°F. PLUS ELONGATION DUE TO CAMBER. PLUS AN ADDITIONAL 1" FOR TOLERANCE.

** BEARINGS SHALL BE CAPABLE OF MAINTAINING A MINIMUM LOAD OF 20% OF MAXIMUM DESIGN CAPACITY AT ALL TIMES.

*** ALL BEARINGS SHALL BE CAPABLE OF RESISTING BOTH THEIR MAXIMUM HORIZONTAL AND VERTICAL DESIGN LOADS

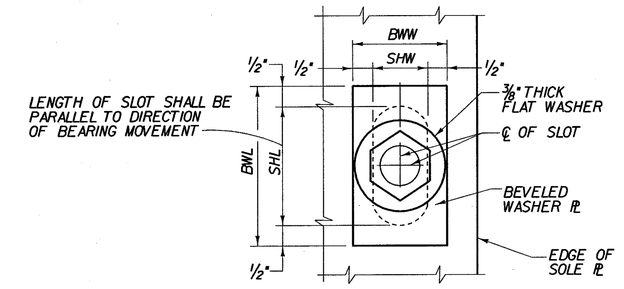

I BR5 TYPICAL WASHER PLATE DETAIL
(NOT TO SCALE)

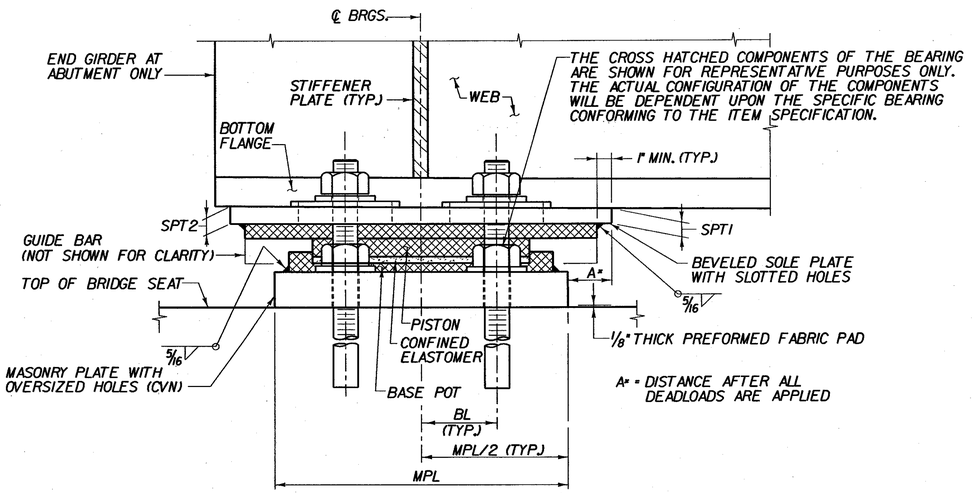

A BR5 EXPANSION BEARING
(NOT TO SCALE)

BEARING AT ABUTMENT SHOWN, BEARING AT PIER SIMILAR

BEARING DEVICE NOTES :

1. BEARING SHALL CONFORM TO REQUIREMENTS OF SECTION 531 AND SUBSECTION 531.04h (CONFINED ELASTOMER (POT) BEARING. COMPONENTS SHALL CONFORM TO DESIGN, FABRICATION AND MATERIAL REQUIREMENTS OF THE APPLICABLE SUBSECTIONS OF SECTION 731
2. BEARINGS SHALL BE PAID FOR UNDER ITEM 531.10 "BEARING DEVICE ASSEMBLY."
3. SHOP DRAWINGS CONFORMING TO SUBSECTION 531.03 SHALL BE SUBMITTED AND SHALL INCLUDE WELDING AND BONDING PROCEDURES. SHOP DRAWINGS SHALL ALSO INDICATE WHETHER BEARING COMPONENTS ARE TO BE GALVANIZED OR METALIZED. IF METALIZED IS USED, THE SHOP DRAWINGS SHALL DENOTE THE TYPE OF SEAL COATING THAT WILL BE PLACED ON THE METALIZING.
4. SOLE PLATES AND WASHERS ARE TO BE GALVANIZED OR METALIZED AS PER SUBSECTION 506.15.
5. THE WELD BETWEEN THE SOLE PLATE AND BOTTOM FLANGE SHALL BE SMAW 8018 (C3). AREAS OF GALVANIZING ON THE SOLE PLATE DESTROYED IN THE WELDING PROCESS SHALL BE REPAIRED IN ACCORDANCE WITH SECTION 513 OF THE SUPPLEMENTAL SPECIFICATION.
6. THE CONCRETE SURFACE UNDER THE BEARING SHALL BE LEVEL.
7. ANCHOR BOLTS SHALL HAVE A 1'-3" MINIMUM EMBEDMENT INTO CONCRETE. ANCHOR BOLTS SHALL CONFORM TO ASTM A307.
8. AN ALTERNATE BEARING CONFIGURATION MAY BE SUBMITTED FOR APPROVAL. THE ALTERNATE SUBMITTED SHALL BE DESIGNED AND CERTIFIED TO MEET THE DESIGN LOADS AND CRITERIA SHOWN ON BEARING GEOMETRY TABLES ON BRIDGE SHEET BR 7 AND SHALL MAINTAIN THE ANCHORAGE SYSTEM SHOWN.
9. IF AN ALTERNATE BEARING CONFIGURATION IS USED, BRIDGE SEAT ELEVATIONS SHALL BE ADJUSTED ACCORDINGLY.
10. THE 1/8" THICK PREFORMED FABRIC PAD BENEATH THE MASONRY PLATE SHALL HAVE THE SAME SIZE AND ANCHOR BOLT HOLE LAYOUT AS THE CORRESPONDING MASONRY PLATE.

STATE OF VERMONT
AGENCY OF TRANSPORTATION

Town Of SEARSBURG	Bridge No.
Highway No. VT. RTE. 9	Log Sta. / Surv. Sta.
VT. RTE. 9 OVER DEERFIELD RIVER	
EXPANSION BEARING DETAILS	
Designed By D. VIENI	Drawn by
Checked By M. OLSTAD Date 2/2002	Bridge Design Supervisor M. OLSTAD Date 2/2002
PROJECT SEARSBURG - WILMINGTON	PROJECT NO. NHF 010-1(18)
I.G.C. Info.	
Bridge Sheet No. BR5	Sheet 98 OF 435

CHA CLOUGH, HARBOUR & ASSOCIATES LLP
ENGINEERS, SURVEYORS, PLANNERS & LANDSCAPE ARCHITECTS
11 WINNERS CIRCLE ALBANY, NEW YORK, 12205

FILE NAME = u:\9755\WSTN\15\br-dg_TYP\TYP_EXP_BER.dgn
DATE/TIME = 02/28/02
USER = 22225

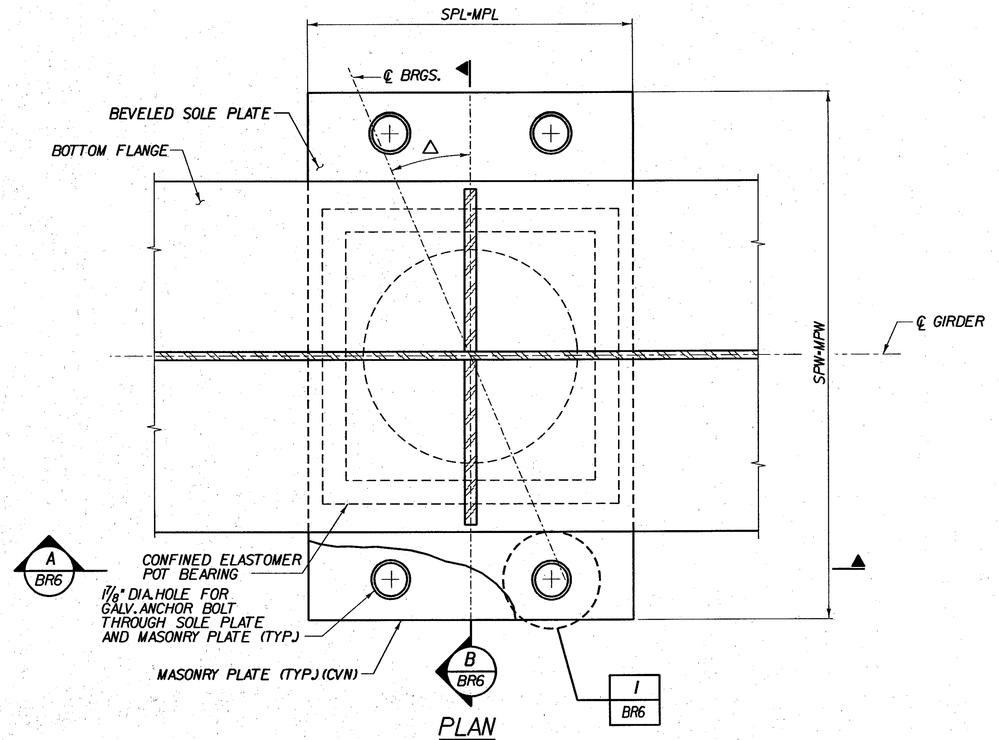

PLAN
(NOT TO SCALE)

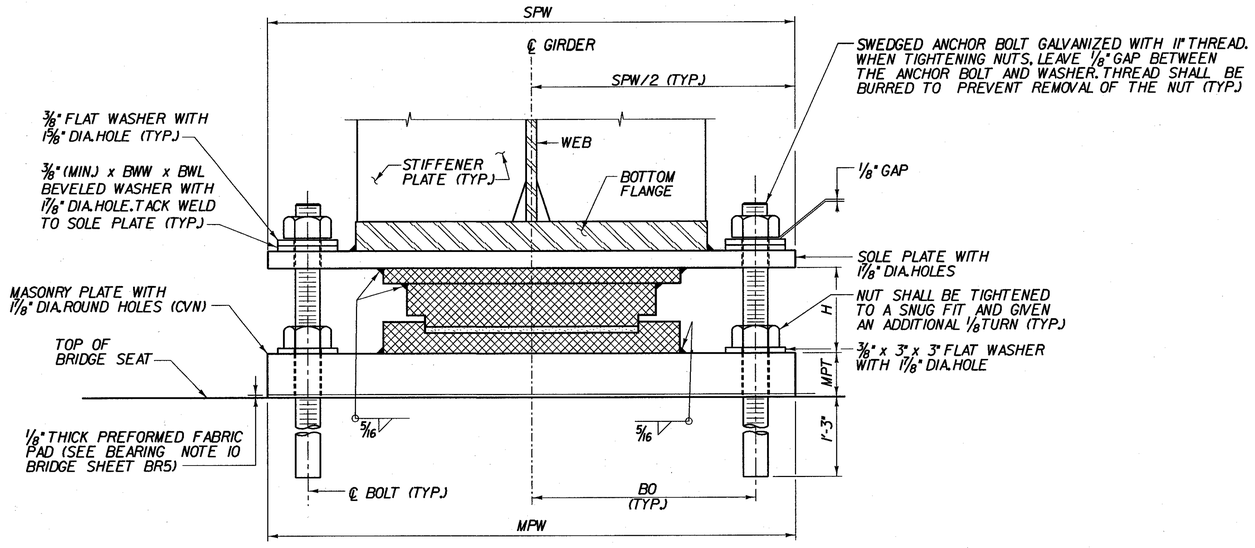

B BR6 FIXED BEARING
(NOT TO SCALE)

THE CROSS HATCHED COMPONENTS OF THE BEARING ARE SHOWN FOR REPRESENTATIVE PURPOSES ONLY. THE ACTUAL CONFIGURATION OF THE COMPONENTS WILL BE DEPENDENT UPON THE SPECIFIC BEARING CONFORMING TO THE ITEM SPECIFICATION.

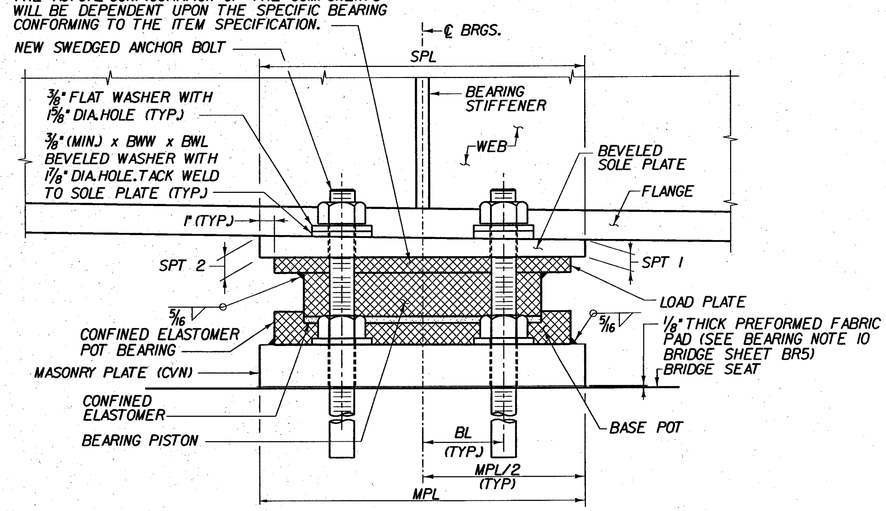

A BR6 FIXED BEARING
(NOT TO SCALE)

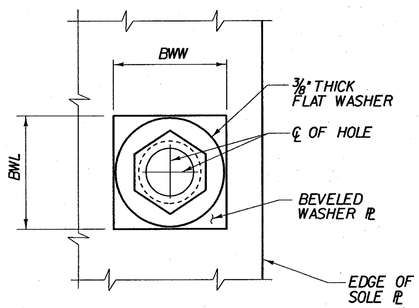

1 BR6 TYPICAL WASHER PLATE DETAIL
(NOT TO SCALE)

** BEARINGS SHALL BE CAPABLE OF MAINTAINING A MINIMUM LOAD OF 20% OF MAXIMUM DESIGN CAPACITY AT ALL TIMES.

*** ALL BEARINGS SHALL BE CAPABLE OF RESISTING BOTH THEIR MAXIMUM HORIZONTAL AND VERTICAL DESIGN LOADS

FOR FIX BEARING GEOMETRY TABLES SEE BR7

STATE OF VERMONT
AGENCY OF TRANSPORTATION

Town Of	SEARSBURG	Bridge No.
Highway No.	VT. RTE. 9	Log Sta. / Surv. Sta.

VT. RTE. 9 OVER DEERFIELD RIVER

FIXED BEARING DETAILS

Designed By D. VIENI	Drawn by K. DETRICK
Checked By M. OLSTAD Date 2/2002	Bridge Design Supervisor M. OLSTAD Date 2/2002
PROJECT SEARSBURG - WILMINGTON	PROJECT NO. NHF 010-1(18)
I.G.C. Info.	
Bridge Sheet No. BR6	Sheet 99 OF 435

CLOUGH, HARBOUR & ASSOCIATES LLP
ENGINEERS, SURVEYORS, PLANNERS & LANDSCAPE ARCHITECTS
11 WINNERS CIRCLE ALBANY, NEW YORK, 12205

FILE NAME =u:\9755\MSTR\15V8-dg-TYP\TYP_fix_br-g.dgn
DATE/TIME =02/20/02
USER =2225

EXPANSION BEARING GEOMETRY

BRIDGE NO.	SUB-STRUCTURE NO.	△ SKEW ANGLE	QUANTITY REQ'D.	CAPACITY (K) VERT.	CAPACITY (K) HORIZ.	ONE WAY LONGIT. MOVEMENT	SOLE PLATE LENGTH (SPL)	SOLE PLATE WIDTH (SPW)	SOLE PLATE THICKNESS SPT1 (UPSTATION)	SOLE PLATE THICKNESS SPT2 (DOWNSTATION)	MASONRY PLATE LENGTH (MPL)	MASONRY PLATE WIDTH (MPW)	MASONRY PLATE THICKNESS (MPT)	ANCHOR BOLT SHL	ANCHOR BOLT SHW	ANCHOR BOLT Ø	ANCHOR BOLT BOLTS/BEARING	ANCHOR BOLT OFFSET (BO)	ANCHOR BOLT OFFSET (BL)	BEVELED WASHER BWL	BEVELED WASHER BWW	BEVELED WASHER WTA (UPSTATION)	BEVELED WASHER WTB (DOWNSTATION)	ASSUMED BEARING HEIGHT (H) *	"A" DISTANCE (UPSTATION SIDE OF BEARINGS) TEMPERATURE (°F) 0	15	30	45	60	75	90	105
ABUTMENT BEARINGS																																
25	ABUT. 1	45°-49'-20"	5	107	11	2 7/16"	1'-7"	2'-3 1/2"	3/4"	1 1/16"	1'-4"	2'-3 1/2"	1 1/2"	6 3/8"	1 7/8"	1 1/2"	4	10 15/16"	4 3/4"	7 7/8"	2 7/8"	3/8"	1/2"	2 7/8"	2 1/2"	2 1/4"	2 1/16"	1 3/16"	1 5/8"	1 3/8"	1 3/16"	1 5/16"
25	ABUT. 2	40°-26'-21"	5	99	20	1 3/8"	1'-3"	2'-3 1/2"	3/4"	1"	1'-2"	2'-3 1/2"	1 1/2"	4 3/8"	1 7/8"	1 1/2"	4	10 15/16"	3 3/4"	5 7/8"	2 7/8"	3/8"	7/16"	2 7/8"	1/4"	5/16"	5/16"	3/8"	7/16"	1/2"	9/16"	5/8"
25A	ABUT. 1	34°-20'-15"	5	231	32	2 1/4"	1'-6"	2'-4"	7/8"	3/4"	1'-3 1/2"	2'-4"	2"	6"	1 7/8"	1 1/2"	4	11 3/16"	4 1/2"	7"	2 7/8"	7/16"	3/8"	3 1/8"	2 1/16"	1 7/8"	1 11/16"	1 1/2"	1 3/8"	1 3/16"	1"	1 3/16"
25A	ABUT. 2	23°-34'-31"	5	188	23	2 1/16"	1'-6"	2'-4"	7/8"	3/4"	1'-3 1/2"	2'-4"	2"	5 5/8"	1 7/8"	1 1/2"	4	11 3/16"	4 3/8"	6 5/8"	2 7/8"	7/16"	3/8"	2 7/8"	1/2"	11/16"	7/8"	1	1 3/16"	1 5/16"	1 1/2"	1 5/8"
PIER BEARINGS																																
25	PIER 1	44°-25'-12"	5	359	46	1 15/16"	1'-6 1/2"	2'-9 1/2"	3/4"	1 1/16"	1'-3 1/2"	2'-9 1/2"	3"	5 1/2"	1 7/8"	1 1/2"	4	1'-1 15/16"	4 1/4"	6 1/2"	2 7/8"	3/8"	1/2"	3 3/8"	2 3/16"	2"	1 7/8"	1 3/4"	1 9/16"	1 7/16"	1 5/16"	1 1/8"

NOTES:

THE DISTANCE FROM ℄ BEARING TO THE END OF THE GIRDER VARIES AT EACH BEARING LOCATION FOR THIS DIMENSION AT BRIDGE 25 AND 25A SEE THE GIRDER ELEVATION FOR EACH BRIDGE.

FIXED BEARING GEOMETRY

BRIDGE NO.	SUB-STRUCTURE NO.	△ SKEW ANGLE	QUANTITY REQ'D.	CAPACITY (K) VERT.	CAPACITY (K) HORIZ.	SOLE PLATE LENGTH (SPL)	SOLE PLATE WIDTH (SPW)	SOLE PLATE THICKNESS SPT1 (UPSTATION)	SOLE PLATE THICKNESS SPT2 (DOWNSTATION)	MASONRY PLATE LENGTH (MPL)	MASONRY PLATE WIDTH (MPW)	MASONRY PLATE THICKNESS (MPT)	ANCHOR BOLT FHD	ANCHOR BOLT Ø	ANCHOR BOLT BOLTS/BEARING	ANCHOR BOLT OFFSET (BO)	ANCHOR BOLT OFFSET (BL)	BEVELED WASHER BWL	BEVELED WASHER BWW	BEVELED WASHER WTA (UPSTATION)	BEVELED WASHER WTB (DOWNSTATION)	ASSUMED BEARING HEIGHT (H)
PIER BEARINGS																						
25	PIER 2	41°-37'-48"	5	361	112	1'-3 1/2"	2'-9 1/2"	1 1/2"	1 3/4"	1'-3 1/2"	2'-9 1/2"	3"	1 7/8"	1 1/2"	4	1'-1 15/16"	3 1/8"	2 7/8"	2 7/8"	3/8"	7/16"	2 7/8"
25A	PIER 1	28°-40'-30"	5	565	143	1'-6 1/2"	3'-0"	1 5/8"	1 1/2"	1'-6 1/2"	3'-0"	3 1/2"	1 7/8"	1 1/2"	4	1'-3 3/16"	3 1/8"	2 7/8"	2 7/8"	3/8"	3/8"	3 1/4"

NOTES:

1. * THE DIMENSION "H" IN THE BEARING TABLE REPRESENTS THE ASSUMED TOTAL HEIGHT OF BEARING MECHANISM BETWEEN THE SOLE PLATE AND MASONRY PLATE USED BY THE DESIGNER TO ESTABLISH CONCRETE DIMENSIONS. THE CONTRACTOR SHALL RECOMPUTE ALL TOP OF PEDESTAL ELEVATIONS TO ACCURATELY REFLECT THE HEIGHT OF BEARING SUPPLIED.
2. DIM "A" IS THE DISTANCE MEASURED AFTER ALL DEAD LOADS ARE APPLIED.
3. SEE FIXED BEARING DETAILS ON BR6.
4. SEE EXPANSION BEARING DETAILS ON BR5.
5. SEE BEARING NOTES ON BR5.

FILE NAME = u:\9755\WSTN\15\Br-dg_TYP\expbrg_tbl.s.plt
DATE/TIME = 12/19/01
USER = SGA

CHA CLOUGH, HARBOUR & ASSOCIATES LLP
ENGINEERS, SURVEYORS, PLANNERS & LANDSCAPE ARCHITECTS
3 WINNERS CIRCLE ALBANY, NEW YORK, 12205

STATE OF VERMONT
AGENCY OF TRANSPORTATION

Town Of SEARSBURG	Bridge No.
Highway No. VT. RTE. 9	Log Sta.
	Surv. Sta.

VT. RTE. 9 OVER DEERFIELD RIVER

BEARING GEOMETRY TABLES

Designed By D. VIENI	Drawn by K. DETRICK
Checked By M. OLSTAD Date 12/2001	Bridge Design Supervisor M. OLSTAD Date 12/2001
PROJECT SEARSBURG - WILMINGTON	PROJECT NO. NHF 010-1(18)
I.G.C. Info.	
Bridge Sheet No. BR7	Sheet 100 OF 435

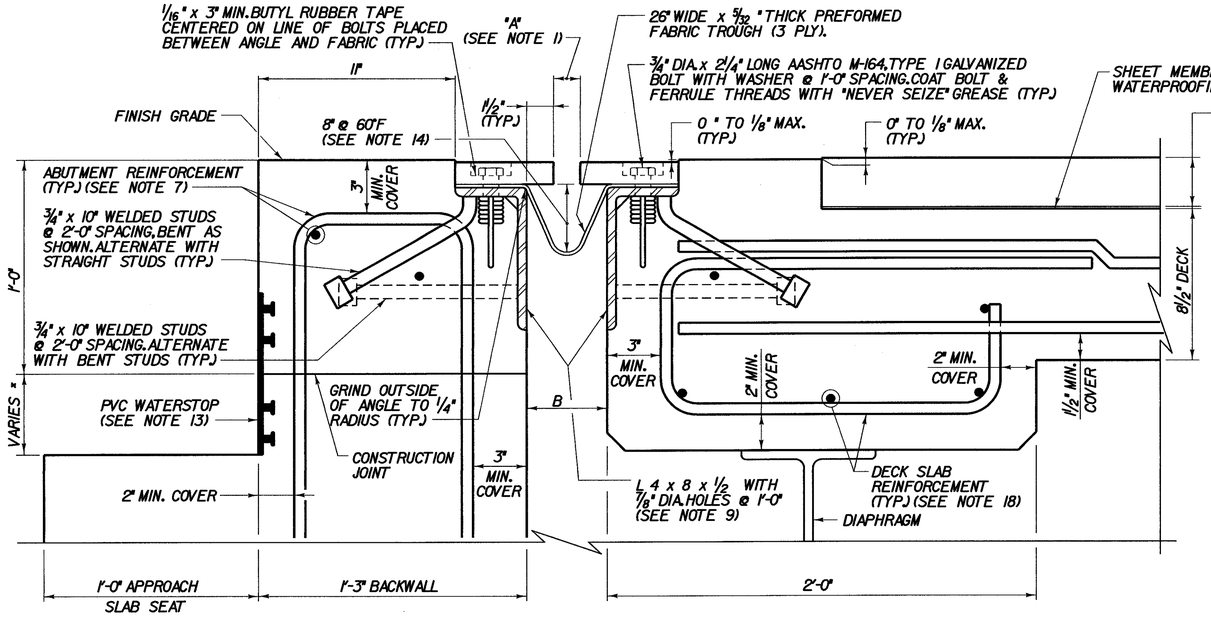

* SEE ABUTMENT SECTION ON BRIDGE SHEETS BR224, BR324 & BR330

C C C BR218 BR318 BR319 — TYPICAL SECTION BETWEEN GIRDERS

(NORMAL TO ℄ BEARINGS)

SCALE 3" = 1'-0

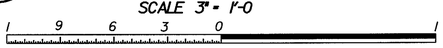

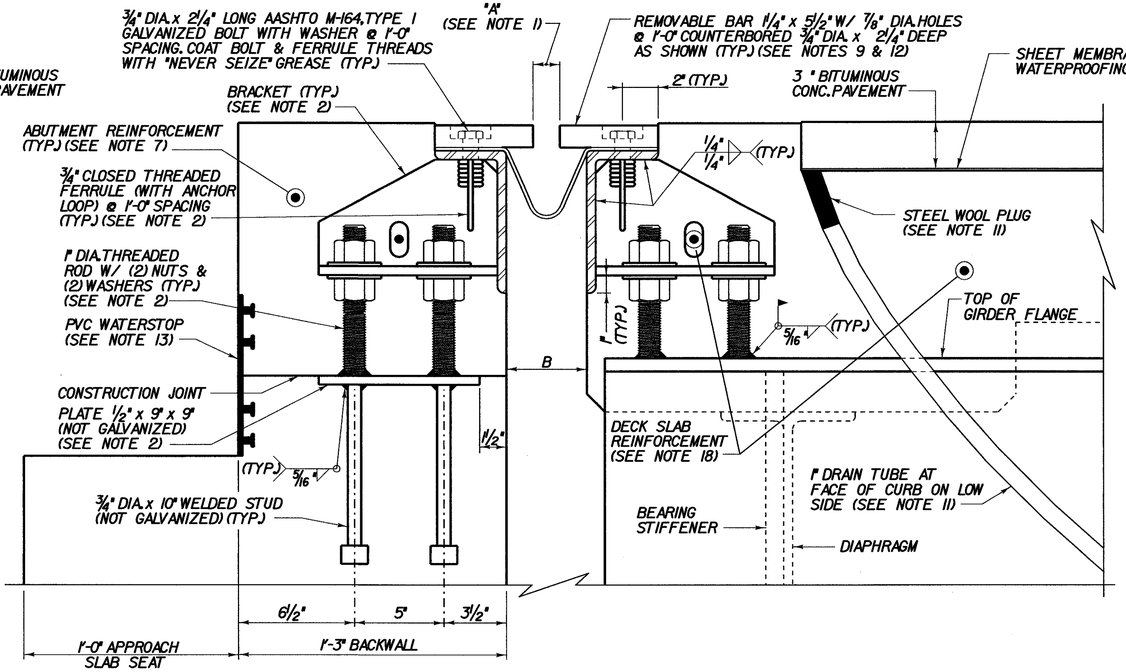

B B B BR218 BR318 BR319 — TYPICAL SECTION AT GIRDERS

(NORMAL TO ℄ BEARINGS)

SCALE 3" = 1'-0

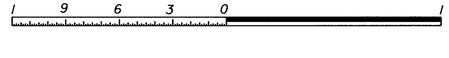

NOTES:

1. FOR DIMENSIONS "A" AND "B", SEE TABLE ON BRIDGE SHEET BR218 AND BR318.
2. FOR BRACKET, PLATE, WASHER AND ANCHOR FERRULE DETAILS, SEE BRIDGE SHEET BR10.
3. DETAILS ON THIS SHEET ARE FOR ITEM 516J0, "BRIDGE EXPANSION JOINT".
4. PREFORMED FABRIC MATERIAL SHALL BE CONTINUOUS AND SHALL CONFORM TO SUBSECTION 707.07 OF THE SPECIFICATIONS.
5. BUTYL RUBBER TAPE SHALL CONFORM TO AASHTO SPECIFICATION M-198, TYPE B.
6. THE FINAL FINISH OF THE EXPANSION DEVICE SHALL BE COVERED DURING THE PLACING OF BRIDGE DECK CONCRETE.
7. ALL STEEL COMPONENTS SHALL BE AASHTO M270 GRADE 36, UNLESS OTHERWISE SPECIFIED. THREADED ROD AND ASSOCIATED NUTS AND WASHERS SHALL CONFORM TO ASTM A307. ALL STEEL COMPONENTS AND HARDWARE SHALL BE GALVANIZED OR METALIZED PER SUBSECTION 506J5 OF THE SPECIFICATIONS, UNLESS OTHERWISE SPECIFIED.
8. PAYMENT FOR ITEM 516J0, "BRIDGE EXPANSION JOINT" SHALL INCLUDE THE FABRICATION AND ERECTION OF THE COMPLETE JOINT ASSEMBLY INCLUDING ALL STEEL PLATES, BRACKETS, ANGLES, WELDED STUDS OR RODS, PREFORMED FABRIC DRAIN TROUGH MATERIAL AND PLASTIC DRAIN TUBES, BUTYL RUBBER TAPE AND ANY OTHER MISCELLANEOUS MATERIAL NECESSARY TO INSTALL JOINT.
9. THE 4 x 8 x 1/2 ANGLES SHALL BE FURNISHED AS ONE CONTINUOUS PIECE. THE 1 1/4" x 5 1/2" BARS EACH SIDE OF THE JOINT SHALL BE PROVIDED IN TWO APPROXIMATELY EQUAL LENGTHS.
10. COAT CONCRETE CONTACT SURFACES WITH EPOXY BONDING COMPOUND MEETING THE REQUIREMENTS OF SUBSECTION 719.02 OF THE SPECIFICATIONS. PAYMENT SHALL BE INCLUDED IN THE UNIT PRICE BID FOR ITEM 516J0, "BRIDGE EXPANSION JOINT".
11. A 1" DIAMETER PLASTIC DRAIN TUBE SHALL BE INSTALLED AS SHOWN AT THE FACE OF CURB. THE UPPER END IS TO BE PLUGGED WITH STEEL WOOL AND THE LOWER END IS TO EXTEND BELOW THE BOTTOM OF THE ADJACENT GIRDER. THE DRAIN TUBES SHALL BE FASTENED TO THE GIRDERS USING A METHOD APPROVED BY THE ENGINEER. MATERIALS FOR TUBING SHALL MEET THE REQUIREMENTS OF 740.01 OF THE SPECIFICATIONS.
12. FILL COUNTERBORED HOLES WITH HOT POURED JOINT SEALER AFTER BOLT INSTALLATION. JOINT SEALER SHALL CONFOR TO THE REQUIREMENTS OF 707.04 OF THE SPECIFICATIONS AND THE COST FOR THE WORK SHALL BE SUBSIDIARY TO ITEM 516J0
13. PAYMENT FOR WATERSTOP SHALL BE SUBSIDIARY TO ITEM 501.25.
14. FABRIC TROUGHS SHALL BE INSTALLED SO THAT MINIMUM SLOPE IS 1% FOR POSITIVE DRAINAGE.
15. FABRIC TROUGH SHALL BE THOROUGHLY CLEANED AND FLUSHED AFTER PAVING OPERATION.
16. EXPANSION JOINTS SHALL BE SHOP ASSEMBLED AND SHIPPED AS ONE UNIT.
17. FOR REINFORCING BAR MARKS AND DETAILS, SEE ABUTMENT REINFORCING DETAIL SHEETS.
18. FOR DECK SLAB REINFORCEMENT, SEE TRANSVERSE SECTION AND DECK REINFORCEMENT PLANS FOR EACH BRIDGE.
19. WORK THIS SHEET WITH TYPICAL END OF DECK SLAB DETAILS ON BR208 AND BR307.

STATE OF VERMONT
AGENCY OF TRANSPORTATION

Town Of SEARSBURG	Bridge No.
Highway No. VT. RTE. 9	Log Sta.
	Surv. Sta.

VT. RTE. 9 OVER DEERFIELD RIVER

TYPICAL "VT TYPE" EXPANSION JOINT DETAILS

Designed By D. VIENI	Drawn by K. DETRICK
Checked By M. OLSTAD Date 2/2002	Bridge Design Supervisor M. OLSTAD Date 2/2002
PROJECT SEARSBURG - WILMINGTON	PROJECT NO. NHF 010-1(18)
L.C.C. Info.	
Bridge Sheet No. BR9	Sheet 101 OF 435

CHA CLOUGH, HARBOUR & ASSOCIATES LLP
ENGINEERS, SURVEYORS, PLANNERS & LANDSCAPE ARCHITECTS
18 WINNERS CIRCLE ALBANY, NEW YORK, 12205

FILE NAME = n:\78d096\structures\consultant 022002\15\br-dg_typ\typ_exp_jnts_dets.dgn
DATE/TIME = 28-FEB-2002
USER = GRay

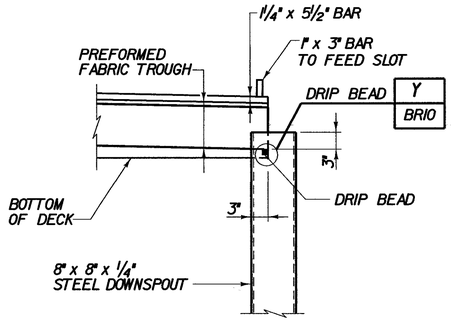

X
BR10
TROUGH OUTLET
(NOT TO SCALE)

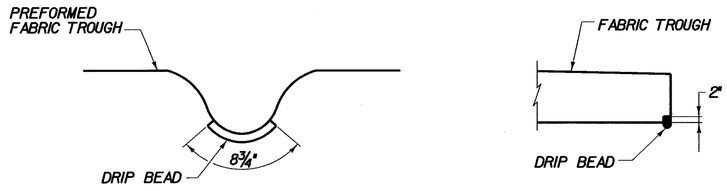

TROUGH END SECTION

Y
BR10
DRIP BEAD DETAIL
(NOT TO SCALE)

NOTE:
A DRIP BEAD OF POLYURETHANE JOINT SEALER IS TO BE APPLIED TO THE UNDERSIDE OF THE FABRIC TROUGH AS SHOWN, WITH THE COST TO BE SUBSIDIARY TO THE ITEM "BRIDGE EXPANSION JOINT"

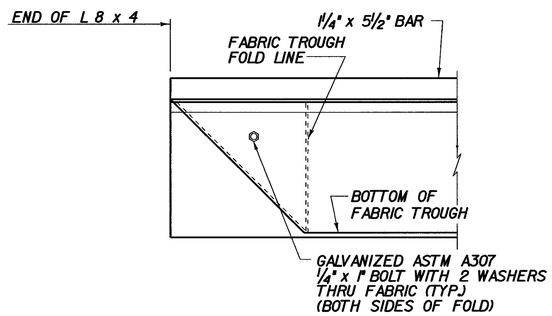

ELEVATION

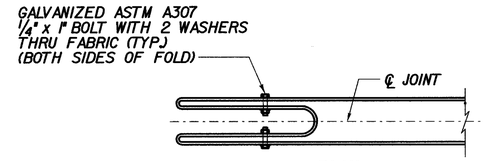

PLAN

Z
BR11
FOLDED TROUGH END DETAILS
(NOT TO SCALE)

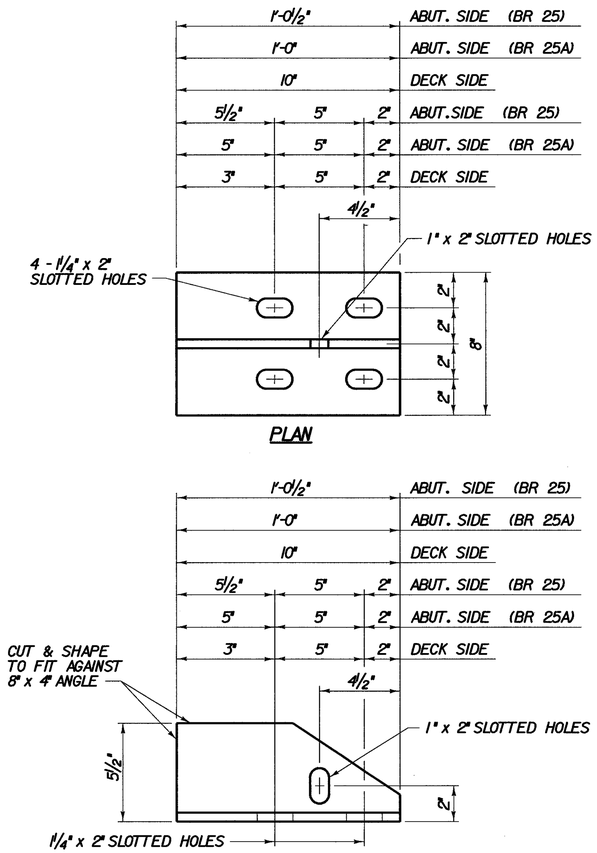

PLAN

ELEVATION

BRACKET DETAILS
SCALE 3" = 1'-0
1 9 6 3 0 1
NOTE: ALL BRACKET PLATES ½" THICK

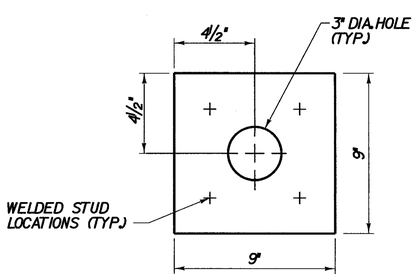

PLATE PLAN
(NOT GALVANIZED)
SCALE 3" = 1'-0
1 9 6 3 0 1

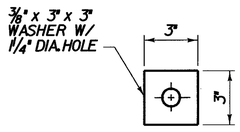

WASHER FOR BRACKET
SCALE 3" = 1'-0
1 9 6 3 0 1

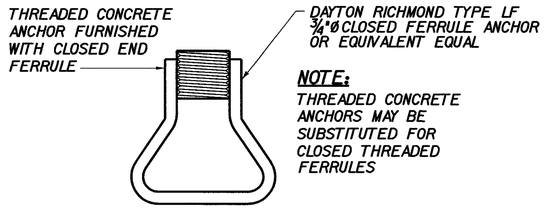

NOTE:
THREADED CONCRETE ANCHORS MAY BE SUBSTITUTED FOR CLOSED THREADED FERRULES

ANCHOR FERRULE DETAIL
(NOT TO SCALE)

CHA CLOUGH, HARBOUR & ASSOCIATES LLP
ENGINEERS, SURVEYORS, PLANNERS & LANDSCAPE ARCHITECTS
11 WINNERS CIRCLE ALBANY, NEW YORK, 12205

STATE OF VERMONT AGENCY OF TRANSPORTATION	
Town Of SEARSBURG	Bridge No. / Log Sta.
Highway No. VT. RTE. 9	Surv. Sta.
VT. RTE. 9 OVER DEERFIELD RIVER	
TYPICAL "VT TYPE" EXPANSION JOINT DETAILS - 2	
Designed By D. VIENI	Drawn by K. DETRICK
Checked By M. OLSTAD Date 2/2002	Bridge Design Supervisor M. OLSTAD Date 2/2002
PROJECT SEARSBURG - WILMINGTON	PROJECT NO. NHF 010-1(18)
I.G.C. Info.	
Bridge Sheet No. BR10	Sheet 102 OF 435

FILE NAME =n:\78d096\structures\consultant 022002\15\brdg_typ\typ_exp_jntdt.dgn
DATE/TIME =26-FEB-2002
USER =RWhitcomb

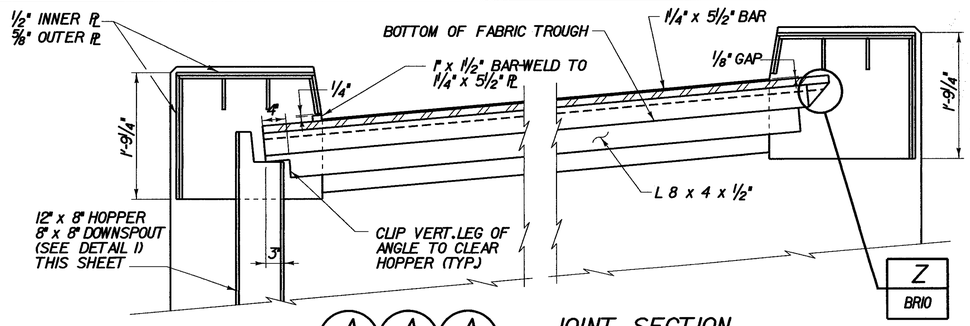

A A A
BR218 BR318 BR319
JOINT SECTION
(BR318 SHOWN, BR218 & BR319 OPP. HAND)

SCALE 1" = 1'-0



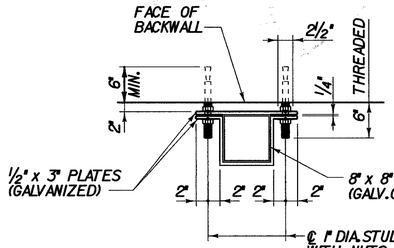

H
BR11
SECTION H-H
SCALE 1" = 1'-0

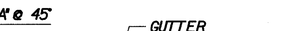

NOTES:

ANCHOR BOLTS, NUTS & WASHERS TO BE GALVANIZED. STUD ANCHOR BOLTS SHALL BE CAPABLE OF CARRYING 3 KIPS IN TENSION AND 3 KIPS IN SHEAR.

8" x 8" x 1/4" STRUC. TUBE (GALV. OR METALIZED).

D D D
BR218 BR318 BR319
JOINT SECTION
SCALE 1 1/2" = 1'-0

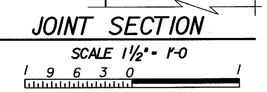

E E E
BR218 BR318 BR319
JOINT SECTION
(BR318 SHOWN, BR218 & BR319, OPP. HAND)

SCALE 1 1/2" = 1'-0

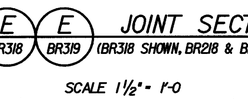

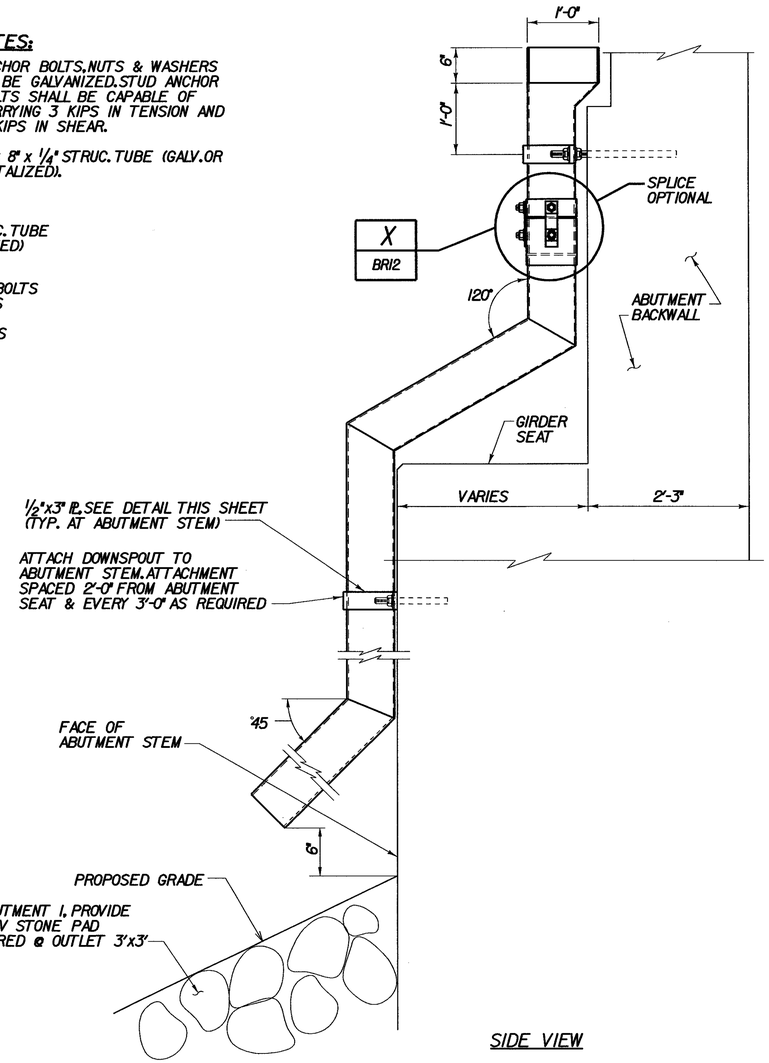

SIDE VIEW

1
BR11
DOWNSPOUT DETAIL
SCALE 1" = 1'-0

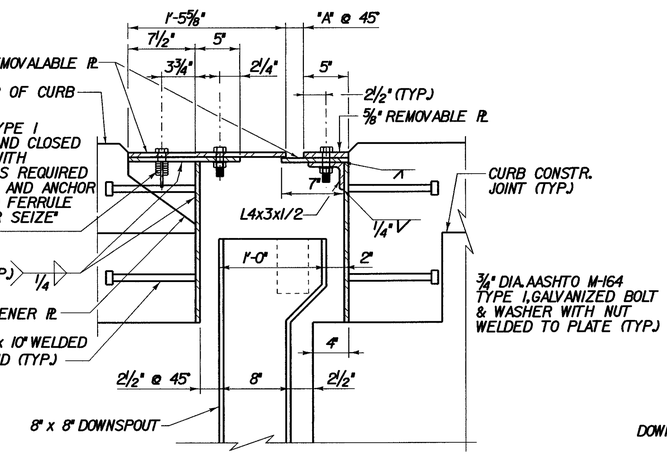

F F F
BR218 BR318 BR319
JOINT SECTION
SCALE 1 1/2" = 1'-0

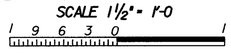

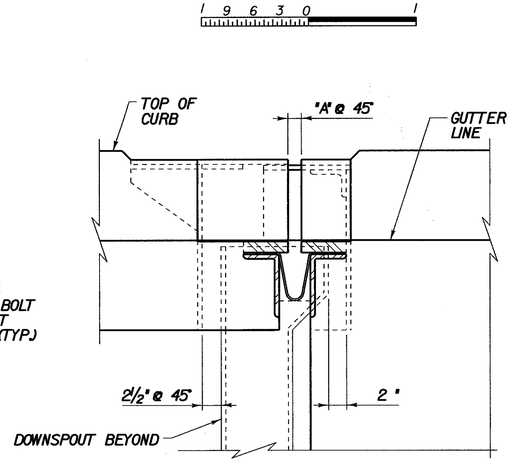

G G G
BR218 BR318 BR319
JOINT SECTION
(BR318 SHOWN, BR218 & BR319 OPP. HAND)

SCALE 1 1/2" = 1'-0

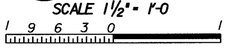

STATE OF VERMONT
AGENCY OF TRANSPORTATION

Town Of SEARSBURG	Bridge No. / Log Sta. / Surv. Sta.
Highway No. VT. RTE. 9	

VT. RTE. 9 OVER DEERFIELD RIVER

TYPICAL "VT TYPE" EXPANSION JOINT DETAILS - 3

Designed By D. VIENI	Drawn by B. DILLENBECK
Checked By M. OLSTAD Date 2/2002	Bridge Design Supervisor M. OLSTAD Date 2/2002
PROJECT SEARSBURG - WILMINGTON	PROJECT NO. NHF 010-1(18)
L.G.C. Info.	
Bridge Sheet No. BR11	Sheet 103 OF 435

CHA CLOUGH, HARBOUR & ASSOCIATES LLP
ENGINEERS, SURVEYORS, PLANNERS & LANDSCAPE ARCHITECTS
11 WINNERS CIRCLE ALBANY, NEW YORK, 12205

FILE NAME = n:\78d696\structures\consultant 022002\15\brdg_typ\wsp_jntdets.dgn
DATE/TIME = 26-FEB-2002
USER = RWhitcomb

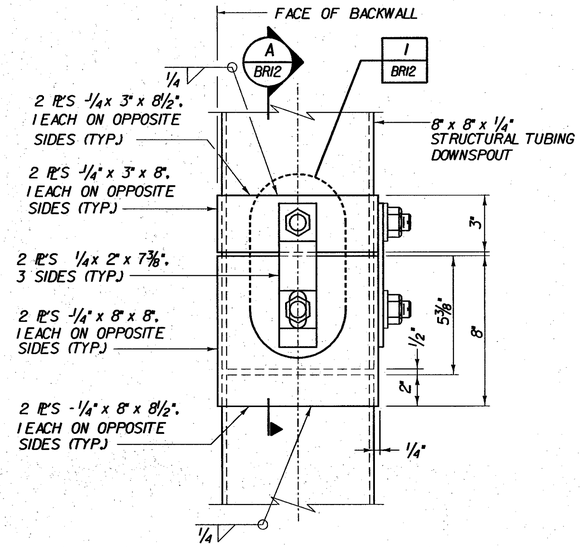

X
BR11
ELEVATION-DOWNSPOUT CONNECTION DETAIL

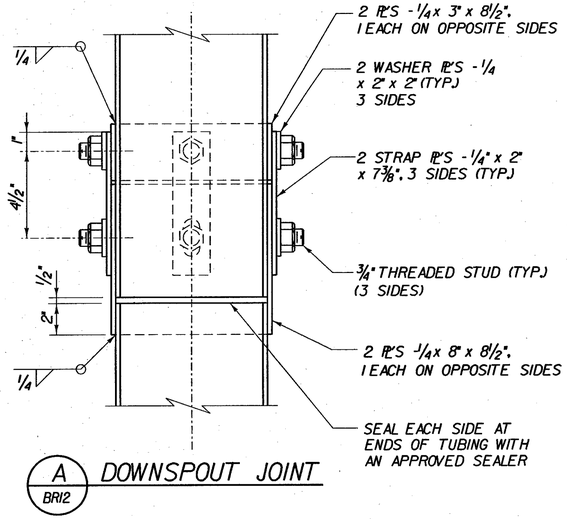

A
BR12
DOWNSPOUT JOINT

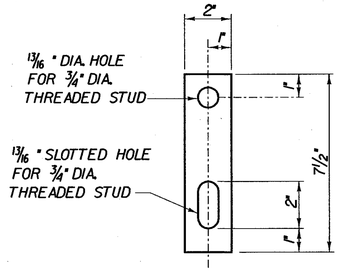

1
BR12
DOWNSPOUT JOINT STRAP DETAIL

DOWNSPOUT DETAILS

SCALE 3" = 1'-0

1 9 6 3 0 1

DOWNSPOUT NOTES:

1. HOLLOW STRUCTURAL STEEL TUBING SHALL CONFORM TO ASTM A500 GRADE B OR ASTM A501.
2. ALL BARS SHALL CONFORM TO AASHTO M270 GRADE 36 AND SHALL BE GALVANIZED.
3. DOWNSPOUT SHALL BE GALVANIZED IN ACCORDANCE WITH SECTION 506J5 AFTER FABRICATION.
4. ALL DOWNSPOUT BOLTS AND RELATED HARDWARE SHALL BE ASTM A307 AND SHALL BE GALVANIZED IN ACCORDANCE WITH SECTION 506J5.
5. WHERE THE GALVANIZING HAS BEEN REMOVED FROM THE DOWNSPOUT OR 1" x 1 1/2" BAR EITHER BY CUTTING, BURNING, WELDING, PLACING OR ANY OTHER MEANS, IT SHALL BE REPAIRED IN ACCORDANCE WITH SECTION 513 OF THE SUPPLEMENTAL SPECIFICATION.
6. DOWNSPOUT SHALL BE PAID FOR UNDER EXPANSION JOINT ITEM 516J0.

FILE NAME =u:\9755\MSTN\15\Brdg_TYP\expjntdetsA.dgn
DATE/TIME =02/20/02
USER =2225

CHA CLOUGH, HARBOUR & ASSOCIATES LLP
ENGINEERS, SURVEYORS, PLANNERS & LANDSCAPE ARCHITECTS
11 WINNERS CIRCLE ALBANY, NEW YORK, 12205

STATE OF VERMONT AGENCY OF TRANSPORTATION	
Town Of SEARSBURG	Bridge No. 25 Log Sta.
Highway No. VT. RTE. 9	Surv. Sta.
VT. RTE. 9 OVER DEERFIELD RIVER	
TYPICAL DOWNSPOUT DETAILS AND NOTES	
Designed By D. VIENI	Drawn by K. DETRICK/Wm WEATHREBY
Checked By M. OLSTAD Date 2/2002	Bridge Design Supervisor M. OLSTAD Date 2/2002
PROJECT SEARSBURG - WILMINGTON	PROJECT NO. NHF 010-1(18)
I.G.C. Info.	
Bridge Sheet No. BR12	Sheet 104 OF 435

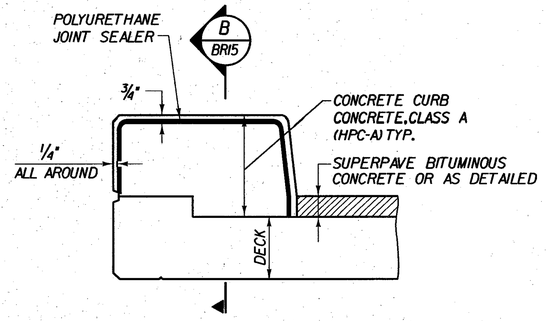

TYPICAL SECTION THROUGH CONCRETE CURB CONSTRUCTION JOINT
(NOT TO SCALE)

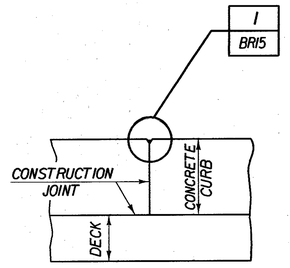

B / BR15 CONC. CURB SECTION
(NOT TO SCALE)

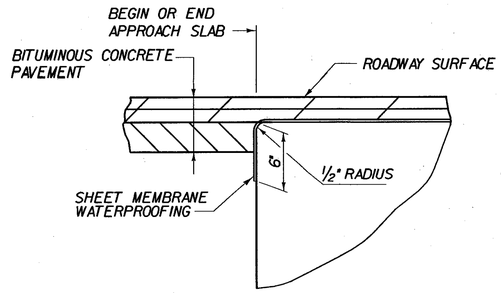

DETAIL FOR SHEET MEMBRANE AT APPROACH SLAB
(NOT TO SCALE)

CURB NOTES:

1. CONSTRUCTION JOINTS THROUGH CONCRETE CURBS SHALL BE SPACED MAXIMUM 15'-0" CENTER TO CENTER AND SHALL BE 1'-6" MINIMUM FROM THE CENTER OF THE NEAREST BRIDGE RAIL POST. CONCRETE SHALL BE PLACED IN ALTERNATING SECTIONS WITH A MINIMUM OF 48 HOURS DELAY BETWEEN ADJACENT POURS.
2. LONGITUDINAL REINFORCING SHALL PASS THROUGH CONCRETE CURB CONSTRUCTION JOINTS.
3. CONSTRUCTION JOINTS THROUGH SIDEWALKS SHALL BE SIMILAR TO CONCRETE CURB CONSTRUCTION JOINTS.

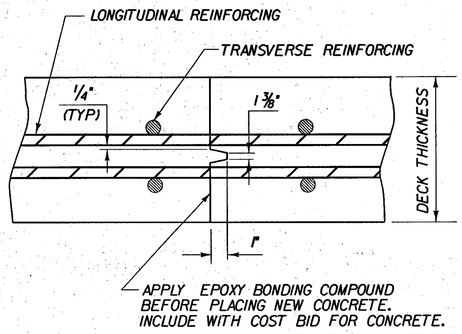

TRANSVERSE BRIDGE SLAB CONSTRUCTION JOINT DETAILS
(NOT TO SCALE)

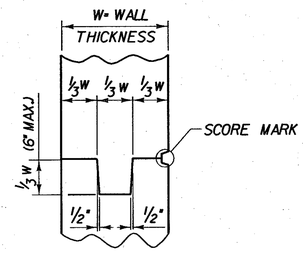

TYPICAL CONCRETE CONSTRUCTION JOINT
(NOT TO SCALE)

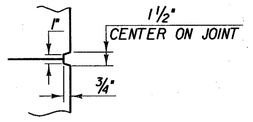

1 / BR15 SCORE MARK DETAIL
(NOT TO SCALE)

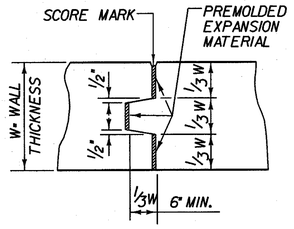

TYPICAL CONCRETE EXPANSION JOINT
(NOT TO SCALE)

FILE NAME =u:\9755\MSTN\15\Brdg_TYP\sd096sp1.dgn
DATE/TIME =02/20/02
USER =2225

CLOUGH, HARBOUR & ASSOCIATES LLP
ENGINEERS, SURVEYORS, PLANNERS & LANDSCAPE ARCHITECTS
11 WINNERS CIRCLE ALBANY, NEW YORK, 12205

STATE OF VERMONT AGENCY OF TRANSPORTATION	
Town Of SEARSBURG	Bridge No. / Log Sta.
Highway No. VT. RTE. 9	Surv. Sta.
VT. RTE. 9 OVER DEERFIELD RIVER	
STANDARD DETAILS	
Designed By D. VIENI	Drawn by K. DETRICK
Checked By M. OLSTAD Date 2/2002	Bridge Design Supervisor M. OLSTAD Date 2/2002
PROJECT SEARSBURG - WILMINGTON	PROJECT NO. NHF 010-K(18)
L.G.C. Info.	
Bridge Sheet No. BR15	Sheet 105 OF 435

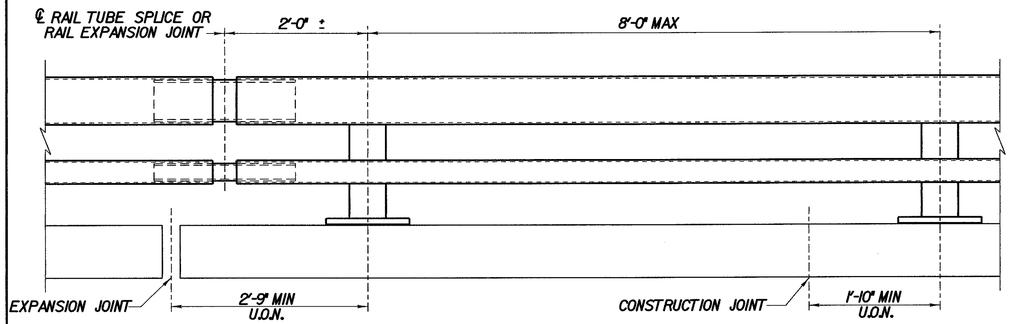

BRIDGE RAILING ELEVATION
(NOT TO SCALE)

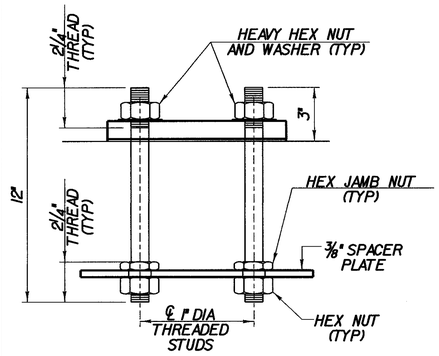

RAIL POST ANCHORAGE
(NOT TO SCALE)

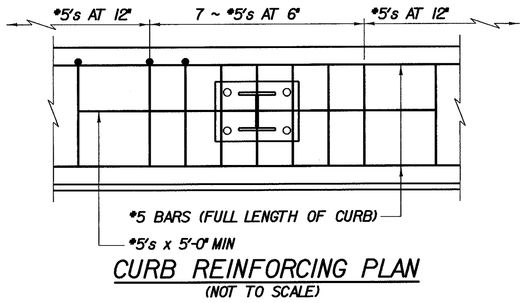

CURB REINFORCING PLAN
(NOT TO SCALE)

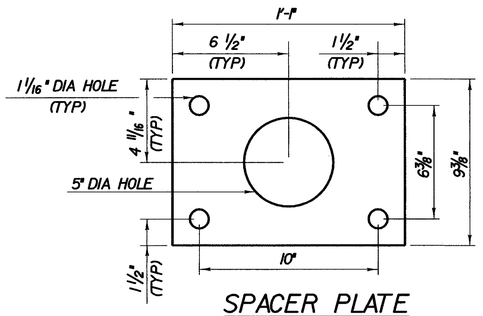

SPACER PLATE
(NOT TO SCALE)

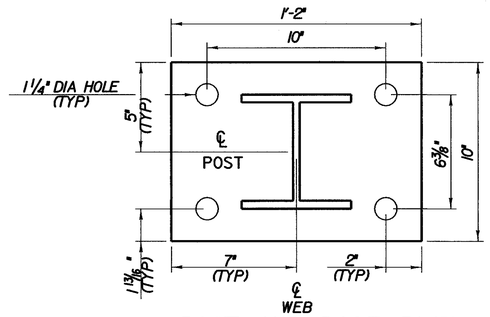

POST AND BASE PLATE
(NOT TO SCALE)

NOTES:

1. ALL WORK AND MATERIALS SHALL CONFORM TO THE PROVISIONS OF SECTION 525, "RAILINGS OF THE STANDARD SPECIFICATION FOR CONSTRUCTION."
2. TUBING AND POSTS SHALL MEET THE REQUIREMENTS OF SECTION 732, "RAILING MATERIALS OF THE STANDARD SPECIFICATIONS FOR CONSTRUCTION" EXCEPT THE DROP-WEIGHT TEAR TEST IN SECTION 732 SHALL NOT APPLY TO THE STRUCTURAL TUBING IN THIS STANDARD.
3. ALL EXPOSED CUT OR SHEARED EDGES SHALL BE ROUNDED TO A 1/16" RADIUS AND BE FREE OF BURRS.
4. RAIL POSTS SHALL BE SET NORMAL TO GRADE.
5. SECTIONS OF RAIL TUBE SHALL BE ATTACHED TO A MINIMUM OF TWO (2) RAIL POSTS AND PREFERABLY TO AT LEAST FOUR (4) POSTS.
6. RAIL TUBE EXPANSION JOINTS SHALL BE PROVIDED IN ANY RAIL BAY SPANNING A SUPERSTRUCTURE EXPANSION JOINT. EXPANSION JOINT WIDTH SHALL BE "X" AT 45°F AND WILL BE ADJUSTED IN THE FIELD BY THE ENGINEER FOR OTHER TEMPERATURES.
7. ALL PARTS SHALL BE GALVANIZED AFTER FABRICATION IN ACCORDANCE WITH AASHTO M111, EXCEPT THAT HARDWARE SHALL MEET THE REQUIREMENTS OF AASHTO M232.
8. RAIL POSTS ANCHORING NUTS SHALL BE TIGHTENED TO A SNUG FIT AND GIVEN AN ADDITIONAL ONE-EIGHTH TURN.
9. RAIL TUBES SHALL BE ATTACHED USING ¾" FULL DIAMETER BODY AASHTO M164 (TYPE 1) ROUND HEAD BOLTS INSERTED THROUGH THE FACE OF THE TUBE. HOLES IN POSTS SHALL BE 1/16" LARGER THAN THE BOLT SIZE.
10. HOLES IN RAILS FOR RAIL TUBE ATTACHMENT MAY BE FIELD-DRILLED. HOLES SHALL BE COATED WITH AN APPROVED ZINC-RICH PAINT PRIOR TO ERECTION.
11. IF THERE IS A CONFLICT BETWEEN THESE STANDARD DETAILS AND THE DESIGN, THE REQUIREMENTS OF THE DESIGN DRAWINGS SHALL BE FOLLOWED.
12. ANY BENDING OF RAIL SHALL BE BY SHOP PROCEDURE ONLY.
13. THE FABRICATOR SHALL SUBMIT SHOP DRAWINGS INCLUDING WELDING PROCEDURES TO THE STRUCTURES SECTION FOR APPROVAL IN ACCORDANCE WITH THE PROVISION OF 506.04, SHOP DRAWINGS. ALL WELDING SHALL CONFORM WITH SECTION 506.10.
14. RAIL POSTS AND BASE PLATES SHALL BE TESTED FOR IMPACT PROPERTIES IN ACCORDANCE WITH ASTM A-370 CHARPY IMPACT TESTING USING TYPE A SPECIMEN.

MATERIALS

RAIL TUBES.....ASTM A500, GRADE B OR ASTM A501
RAIL POSTS AND BASE PLATES.....ASTM A709/A709M, GRADE 50
ALL OTHER SHAPES AND PLATES.....ASTM A709/A709M, GRADE 36
ANCHOR STUDS.....ASTM A449
ALL OTHER BOLTS (UNLESS NOTED).....AASHTO M164, TYPE 1

NUTS FOR AASHTO M164 BOLTS AND FOR ANCHOR STUDS SHALL COMPLY WITH AASHTO M291 (ASTM A563).

WASHERS SHALL COMPLY WITH AASHTO M293 (ASTM F436) SPECIFICATIONS.

⅛" PAD SHALL COMPLY WITH STANDARD SPECIFICATION SUBSECTION 731.01 OR 731.02.

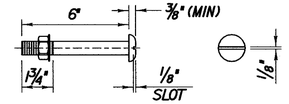

¾" DIA M164 (TYPE 1) ROUND HEAD BOLT
(NOT TO SCALE)
(WITH WASHER AND PREVAILING TORQUE TYPE LOCK NUT)
(SEE NOTE *9)
ONLY FULL DIAMETER BODY BOLTS WILL BE ALLOWED.

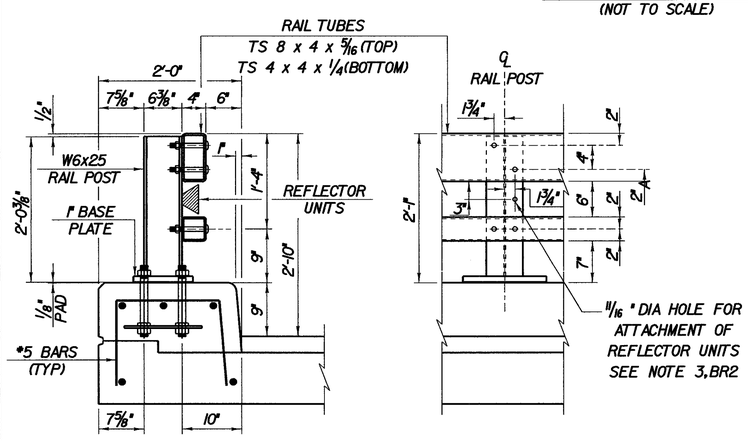

TYPICAL SECTION

ELEVATION

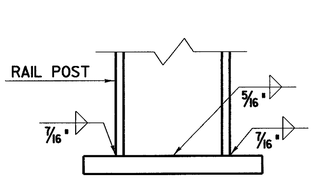

BASE WELD DETAIL
(NOT TO SCALE)

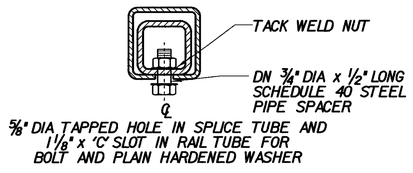

EXPANSION JOINT SECTION
(NOT TO SCALE)
FOR DETAILS NOT SHOWN, SEE "RAIL TUBE SPLICE SECTION."

SPLICE TABLE					
T	A	B	C	L	X
N/A	4"	2"	–	20"	¾"
EXPANSION JOINT TABLE					
<4"	4"	2"	2½"	20"	2½"
>4" <6½"	5½"	2⅝"	3½"	23¾"	4"
>6½" <9"	6½"	3⅜"	9"*	27¾"	5"
>9" <13"	8½"	4⅜"	11"*	33¾"	7"

T = TOTAL MOVEMENT BETWEEN BRIDGE EXPANSION JOINTS. SEE NOTE 6.
* = SINGLE SLOT

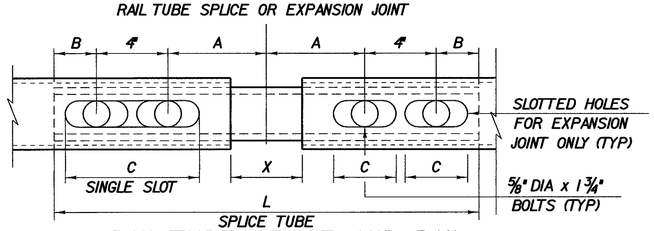

RAIL TUBE SPLICE AND RAIL EXPANSION JOINT DETAIL
(BOTTOM VIEW)
(NOT TO SCALE)

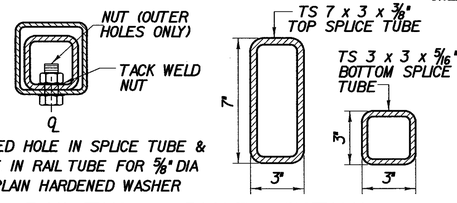

RAIL TUBE SPLICE SECTION
(NOT TO SCALE)

STATE OF VERMONT
AGENCY OF TRANSPORTATION

Town Of	SEARSBURG	Bridge No.	
Highway No.	VT. RTE. 9	Log Sta.	
		Surv. Sta.	

VT. RTE. 9 OVER DEERFIELD RIVER
NETC RAIL DETAILS (1)

Designed By D. VIENI	Drawn by K. DETRICK/Wm. WEATHERBY
Checked By M. OLSTAD Date 2/2002	Bridge Design Supervisor M. OLSTAD Date 2/2002
PROJECT SEARSBURG - WILMINGTON	PROJECT NO. NHF 010-1(18)
L.G.C. Info.	
Bridge Sheet No. BR17	Sheet 106 OF 435

CLOUGH, HARBOUR & ASSOCIATES LLP
ENGINEERS, SURVEYORS, PLANNERS & LANDSCAPE ARCHITECTS
3 WINNERS CIRCLE ALBANY, NEW YORK, 12205

FILE NAME =n:\78d096\structures\consultant 022002\15\brdg_typ\sd096br2.dgn
DATE/TIME =26-FEB-2002
USER =RWhitcomb

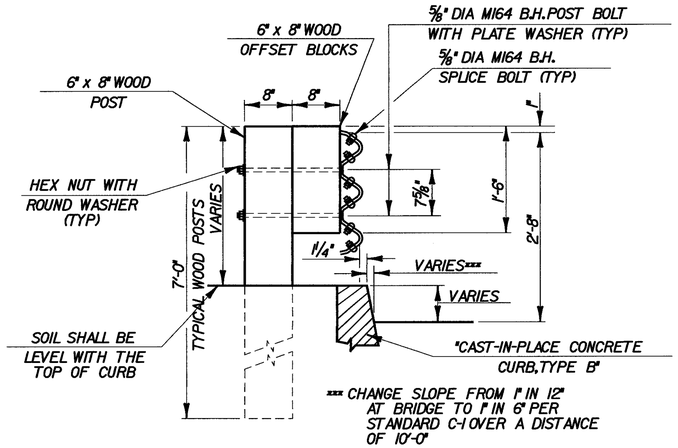

WOOD POST-RAIL ASSEMBLY

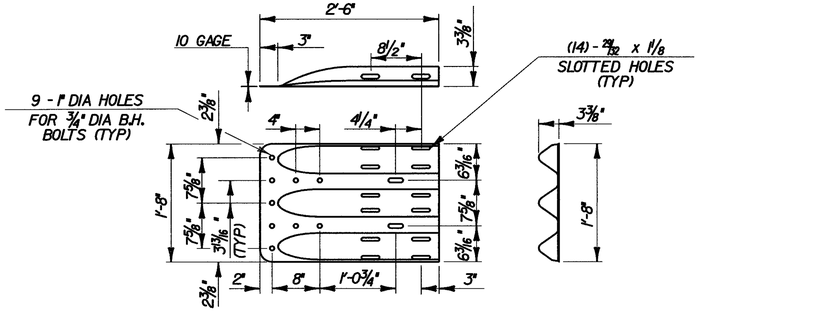

THRIE - BEAM TERMINAL CONNECTOR*

* (ARTBA HM-TF-13 / RE-67)

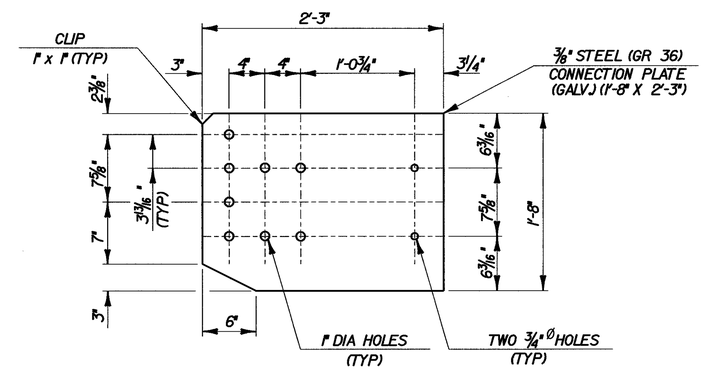

CONNECTOR PLATE

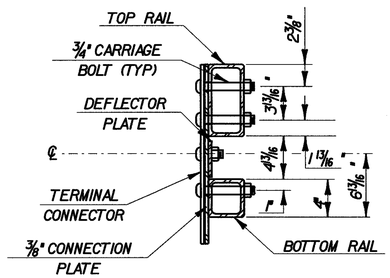

SECTION C-C (CONNECTION PLATE)

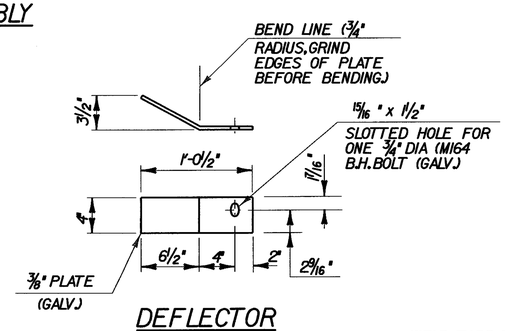

DEFLECTOR PLATE DETAIL

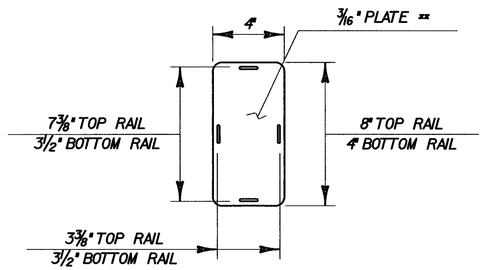

* WELD TABS TO END CAP PLATE IN TAPERED POSITION SO CAP CAN BE JAMMED INTO END OF RAIL TUBE.
** ROUND CORNERS 1/2" RADIUS (TYP)

END CAP DETAIL

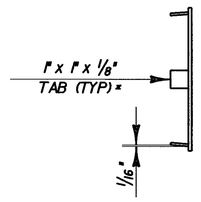

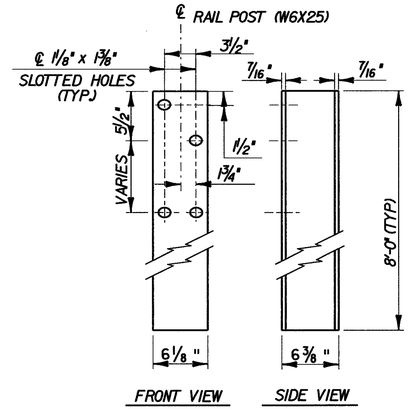

RAIL POST

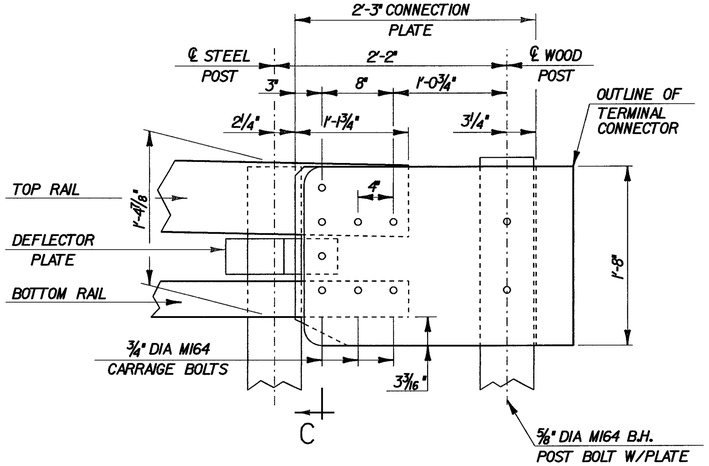

DETAIL A

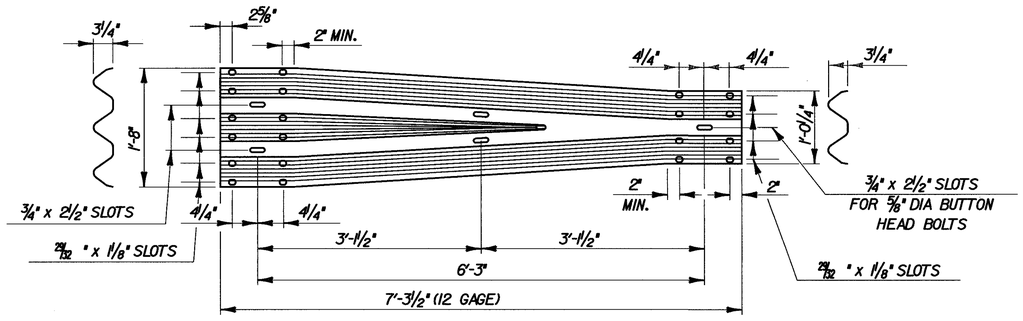

THRIE-BEAM TO STD SB * TRANSITION SECTION

* (ARTBA HM-TF-13 /RE-69-76)

CHA CLOUGH, HARBOUR & ASSOCIATES LLP
ENGINEERS, SURVEYORS, PLANNERS & LANDSCAPE ARCHITECTS
8 WINNERS CIRCLE ALBANY, NEW YORK, 12205

STATE OF VERMONT
AGENCY OF TRANSPORTATION

Town Of SEARSBURG	Bridge No.
Highway No. VT. RTE. 9	Log Sta. / Surv. Sta.
VT. RTE. 9 OVER DEERFIELD RIVER	
NETC RAIL DETAILS (2)	
Designed By D. VIENI	Drawn by K. DETRICK
Checked By M. OLSTAD Date 2/2002	Bridge Design Supervisor M. OLSTAD Date 2/2002
PROJECT SEARSBURG - WILMINGTON	PROJECT NO. NHF 010-(18)
L.G.C. Info.	
Bridge Sheet No. BRI8	Sheet 107 OF 435

FILE NAME =n:\784096\structures\consultant 022002\165\br-dg-tpp\sd096br1.dgn
DATE/TIME =26-FEB-2002
USER =RWhitcomb

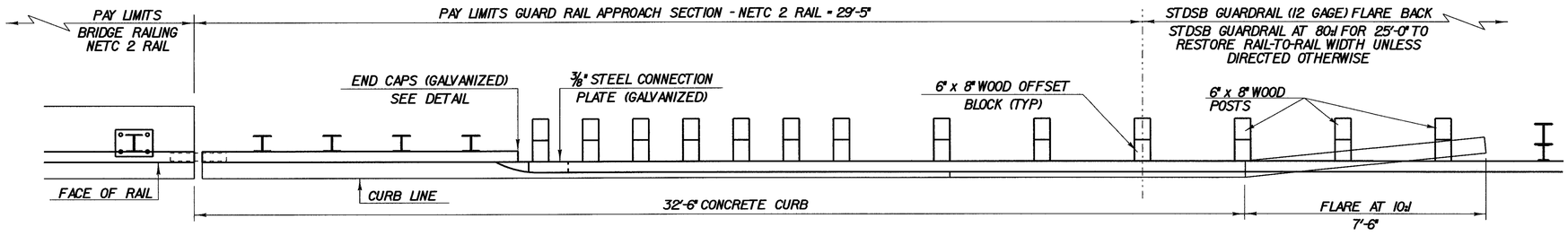

RAILING TRANSITION PLAN

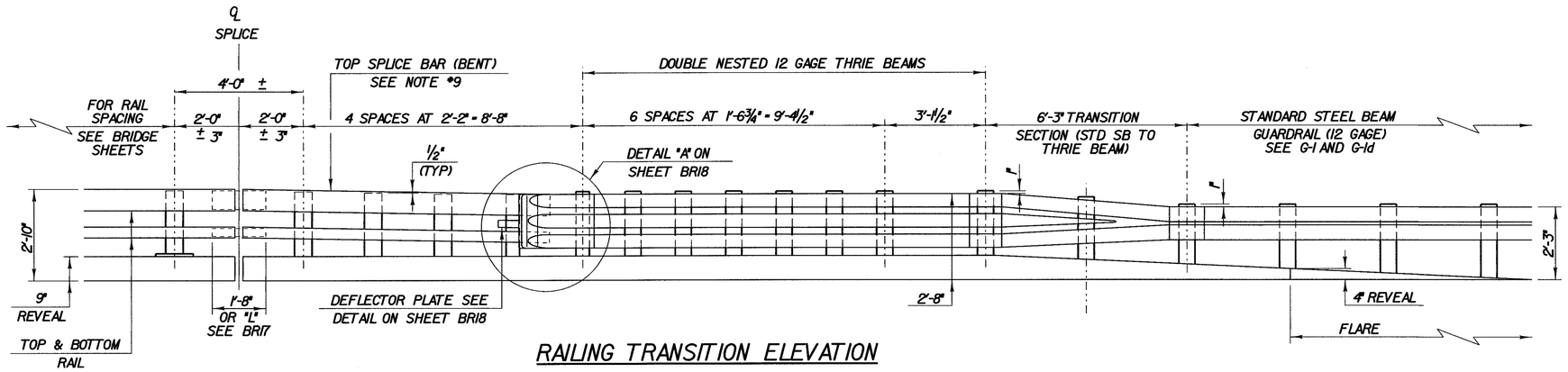

RAILING TRANSITION ELEVATION

NOTES

1. REFER TO SHEET BRI FOR ADDITIONAL DETAILS, NOTES AND MATERIAL SPECIFICATIONS.
2. PAYMENT FOR GUARD RAIL APPROACH SECTION - NETC 2 RAIL SHALL INCLUDE THE TERMINAL CONNECTOR, THE CONNECTION PLATE, THE DEFLECTOR PLATE, RAIL, POSTS, BLOCKS AND ATTACHMENT HARDWARE.
3. THE REFLECTORIZED ALUMINUM DELINEATION IS TO BE ERECTED EVERY 30' (OR CLOSEST POST) WITH A 5/8" DIAMETER BOLT. DELINEATORS SHALL MEET SPECIFICATION REQUIREMENTS FOR ASTM B209 ALLOY 5052-H32.
4. REFLECTIVE MATERIAL SHALL MEET REQUIREMENTS OF SUBSECTION 750.08 AND SHALL BE OF ENCAPSULATED LENS SILVER OR AMBER. AMBER IS TO BE INSTALLED ON THE DRIVER'S LEFT AND SILVER ON THEIR RIGHT.
5. ON BRIDGES WITH A SIDWALK, DELINEATORS ARE NOT TO BE INSTALLED ON THE SIDEWALK SIDE OF THE BRIDGE (I.E. DELINEATORS INSTALLED ONLY ON THE CURB SIDE AND ON THE APPROACH ON THE CURB SIDE). PAYMENT SHALL BE SUBSIDIARY TO ALL OTHER ITEMS.
6. ALL APPROACH RAIL SPLICES SHALL BE LAPPED IN THE DIRECTION OF TRAFFIC FLOW.
7. ALL BRIDGE APPROACH RAIL MATERIALS, DIMENSION SIZES AND NOTES SHALL BE THE SAME AS THOSE OF THE BRIDGE RAIL, UNLESS OTHERWISE NOTED.
8. CARRIAGE BOLTS SHALL BE AASHTO M164 AND NUTS SHALL BE ASTM A563 GRADE A OR BETTER (GALVANIZED).
9. WELD TOP SPLICE BAR TO FIT BEND. USE COMPLETE PENETRATION WELD (B-U2).
10. THE CONCRETE CURB WILL BE PAID FOR AS ITEM 616.28, "CAST-IN-PLACE CONCRETE CURB, TYPE B."

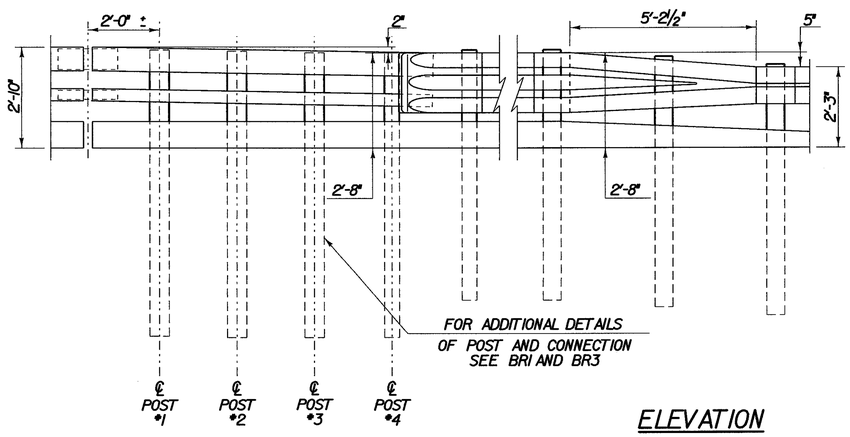

ELEVATION

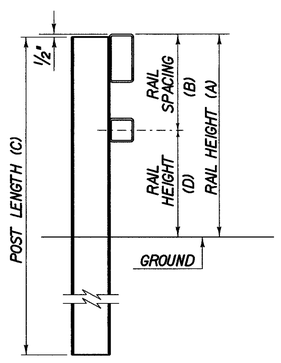

TYPICAL SECTION

POST NUMBER	RAIL HEIGHT (A)	RAIL SPACING (B)	POST LENGTH (C)	RAIL HEIGHT (D)
1	2'-9 1/2"	1'-3 3/4"	8'-0"	1'-5 3/4"
2	2'-9"	1'-3 1/2"	8'-0"	1'-5 1/2"
3	2'-8 1/2"	1'-3 3/16"	8'-0"	1'-5 5/16"
4	2'-8"	1'-2 1/8"	8'-0"	1'-5 1/8"

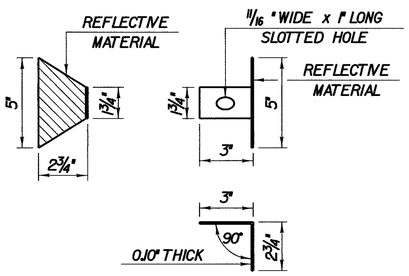

DELINEATION DEVICE DETAILS

STATE OF VERMONT
AGENCY OF TRANSPORTATION

Town Of SEARSBURG	Bridge No.
Highway No. VT. RTE. 9	Log Sta. / Surv. Sta.
VT. RTE. 9 OVER DEERFIELD RIVER	
NETC RAIL DETAILS (3)	
Designed By D. VIENI	Drawn by K. DETRICK/WM WEATHERBY
Checked By M. OLSTAD Date 2/2002	Bridge Design Supervisor M. OLSTAD Date 2/2002
PROJECT SEARSBURG - WILMINGTON	PROJECT NO. NHF 010-(18)
I.G.C. Info.	
Bridge Sheet No. BRI9	Sheet 108 OF 435

CLOUGH, HARBOUR & ASSOCIATES LLP
ENGINEERS, SURVEYORS, PLANNERS & LANDSCAPE ARCHITECTS
11 WINNERS CIRCLE ALBANY, NEW YORK, 12205

FILE NAME =n:\178d996\st\vutures\consultant 022002\15\brdg_typ\sd896br1.dgn
DATE/TIME =26-FEB-2002
USER =RWhitcomb

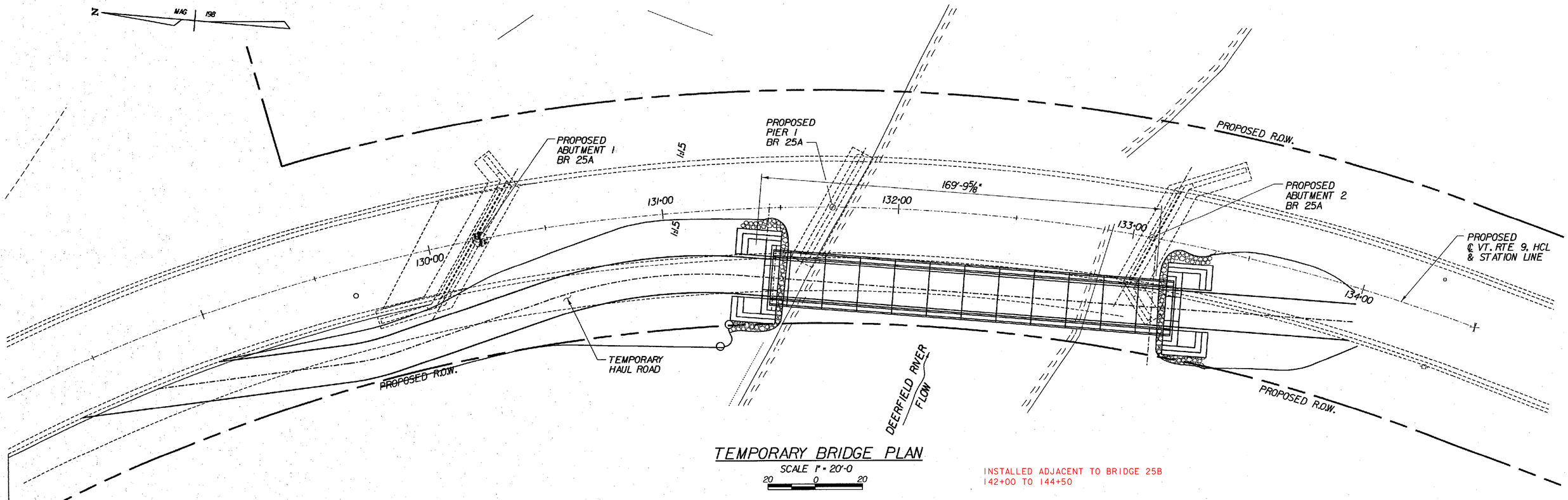

TEMPORARY BRIDGE PLAN

SCALE 1" = 20'-0

20 0 20

INSTALLED ADJACENT TO BRIDGE 25B
142+00 TO 144+50

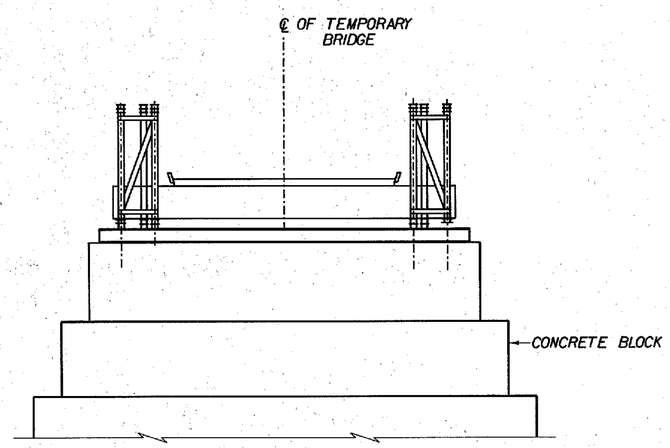

TEMPORARY BRIDGE TRANSVERSE SECTION

SCALE 3/16" = 1'-0

1 0 2 4 6 8

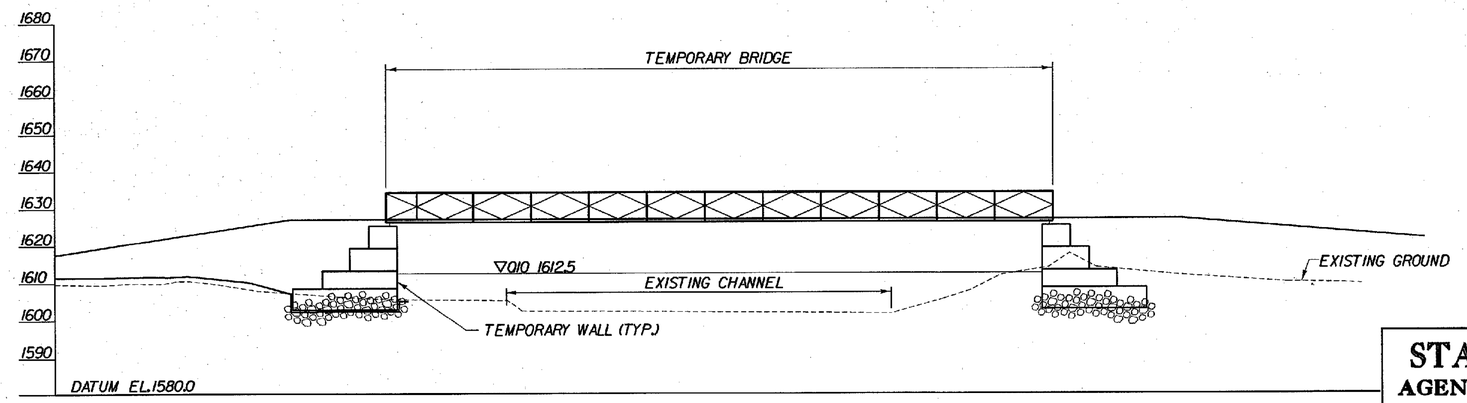

TEMPORARY BRIDGE SECTION

SCALE 1" = 20'-0

20 0 20

STATE OF VERMONT
AGENCY OF TRANSPORTATION

Town Of	SEARSBURG	Bridge No. 25A	Log Sta.
Highway No.	VT. RTE. 9	Surv. Sta. 132+00	
VT. RTE. 9 OVER DEERFIELD RIVER			
TEMPORARY BRIDGE PLAN			
Designed By D. VIENI		Drawn by K. DETRICK	
Checked By M. OLSTAD	Date 12/2001	Bridge Design Supervisor M. OLSTAD	Date 12/2001
PROJECT SEARSBURG - WILMINGTON		PROJECT NO. NHF 010-1(18)	
I.G.C. Info.			
Bridge Sheet No. BR20		Sheet 109 OF 435	

CHA CLOUGH, HARBOUR & ASSOCIATES LLP
ENGINEERS, SURVEYORS, PLANNERS & LANDSCAPE ARCHITECTS
11 WINNERS CIRCLE ALBANY, NEW YORK, 12205

FILE NAME =u:\9755\MSTN\15\Brdg_TYP\Tempbrdg.dgn
DATE/TIME =02/20/02
USER =2225

N MAG 198

PROPOSED TOE OF SLOPE

STONE FILL TYPE IV (TYP.)

DEERFIELD RIVER FLOW

PROPOSED TOE OF SLOPE

B

B

BOND BROOK STA.10+28.78 INV. EL.1626.00

EXISTING R.O.W. LIMITS

32'-0"

1:1.5

1:2

WW1

WW3

3'-0" SHOULDER BREAK

EXISTING V.T.RTE.9

EXISTING STRUCTURE TO BE REMOVED UNDER ITEM 529.15

8'-0" SHOULDER

PROPOSED ℄ VT.RTE.9 & STATION LINE

VT.RTE 9 TO BENNINGTON

VT.RTE 9 TO WILMINGTON

℄ BRIDGE STA.116+05.39 VT.RTE.9 - BOND BROOK STA.10+00.00

17'-30'-00" SKEW TO CHORD

12'-0" WB TRAVEL LANE

END ROADWAY BEGIN BRIDGE ABUT.1 STA.115+86.91 EL.1646.99

END BRIDGE BEGIN ROADWAY ABUT.2 STA.116+23.79 EL.1646.40

12'-0" EB TRAVEL LANE

36'-10½" CHORD

℄ PROPOSED DETOUR VT.RTE.9 & STATION LINE

PROPOSED V.T.RTE.9 DETOUR

8'-0" SHOULDER

3'-0" SHOULDER BREAK

AND VARIES

WW2

WW4

N 63°-39'-23.35" E.

BOND BROOK FLOW

16'-0"

8'-0"

3'-0"

PROPOSED LIMITS OF FILL

STONE FILL TYPE IV (TYP.)

BOND BROOK STA.9+55.26 INV.EL. 1630.00

BOND BROOK STA.9+32.61

A

A

PLAN

SCALE 1" = 10'-0

10 0 10

INSTALLED AS PER PLAN.

GRUBBING MATERIAL (1'-0" THICKNESS) GRUBBING MATERIAL SHALL NOT BE PLACED UNDER THE BRIDGE

ORDINARY HIGH WATER EL.

ITEM 613.13 5'-0" STONE FILL, TYPE IV

EXISTING GROUND

ITEM 203.27 UNCLASSIFIED CHANNEL EXCAVATION

5'-0"

ITEM 649.31 - GEOTEXTILE UNDER STONE FILL

10'-0"

TYPICAL EMBANKMENT PROTECTION DETAIL

(NOT TO SCALE)

CURVE DATA

REV P.C. - STA. 113+61.81
REV P.T. - STA. 122+89.88
Δ = 41°-45'-47.87" LT.
R = 1273.24'
Dc = 4°-30'
L = 928.07'
T = 485.74'
E = 89.51'
BANK: 0.067 FT/FT

NOTE:

1. FOR ELEVATION A-A AND B-B, SEE BRIDGE SHEET BRI03.
2. EXISTING STRUCTURE TO BE REMOVED TO BOTTOM OF FOOTING ELEVATION, ITEM 529.15.

STATE OF VERMONT
AGENCY OF TRANSPORTATION

Town Of SEARSBURG	Bridge No. 24
Highway No. VT. RTE. 9	Log Sta. / Surv. Sta. 116+00
VT. RTE.9 OVER BOND BROOK	
PLAN	
Designed By M. GOGUEN	Drawn by J. LAGONE
Checked By M. OLSTAD Date 12/2001	Bridge Design Supervisor M. OLSTAD Date 12/2001
PROJECT SEARSBURG - WILMINGTON	PROJECT NO. NHF 010-1(18)
I.G.C. Info.	
Bridge Sheet No. BRI00	Sheet 111 OF 435

CLOUGH, HARBOUR & ASSOCIATES LLP
ENGINEERS, SURVEYORS, PLANNERS & LANDSCAPE ARCHITECTS
11 WINNERS CIRCLE ALBANY, NEW YORK, 12205

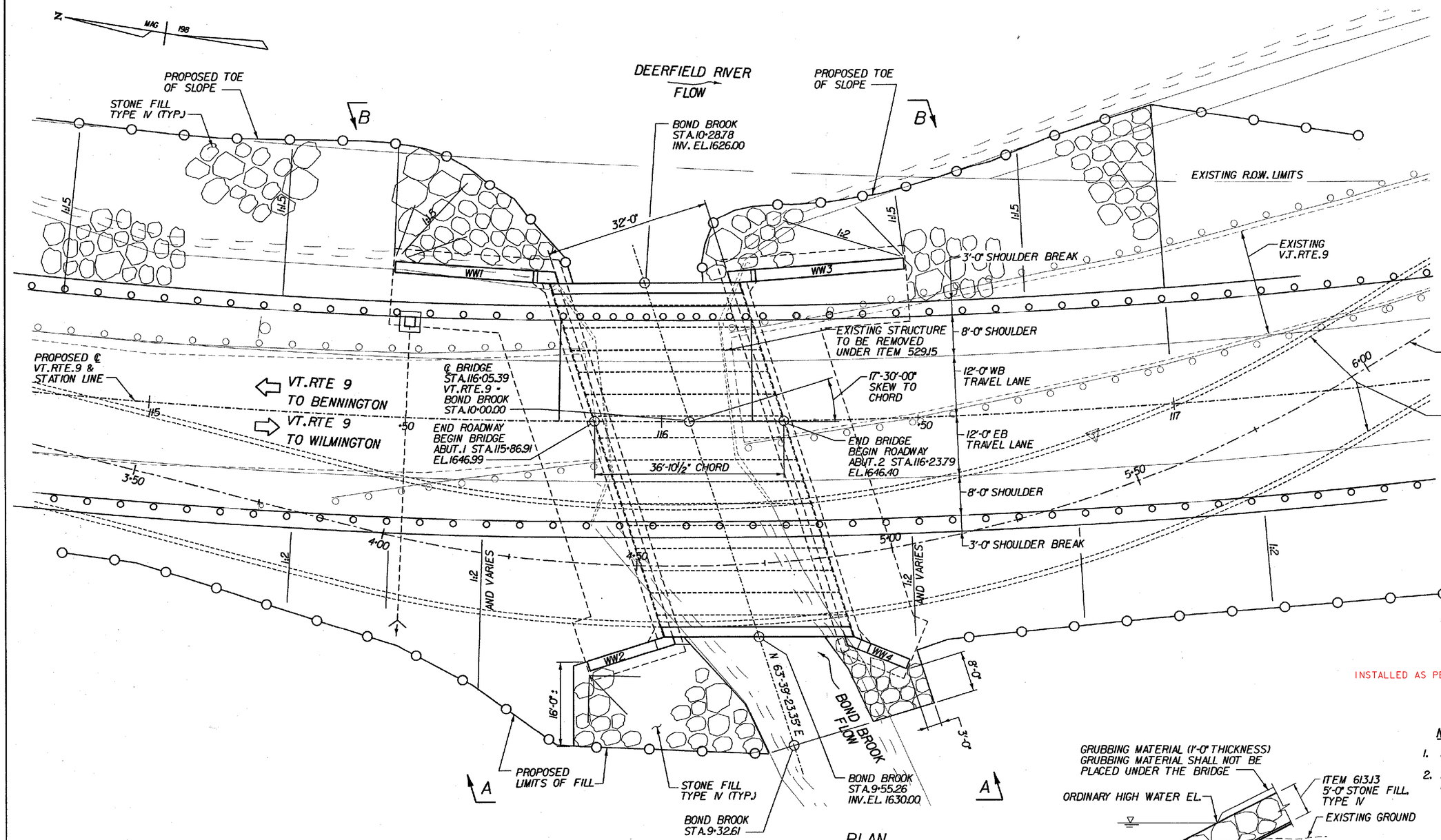

PLAN

SCALE 1" = 10'-0

CURVE DATA

REV P.C. = STA. 113+61.81
REV P.T. = STA. 122+89.88
Δ = 41°-45'-47.87 LT.
R = 1273.24'
Dc = 4°-30'
L = 928.07'
T = 485.74'
E = 89.51'
BANK: 0.067 FT/FT

INSTALLED AS PER PLAN.

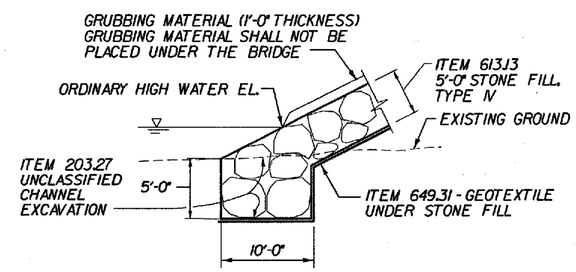

TYPICAL EMBANKMENT PROTECTION DETAIL

(NOT TO SCALE)

NOTE:

1. FOR ELEVATION A-A AND B-B, SEE BRIDGE SHEET BR103.
2. EXISTING STRUCTURE TO BE REMOVED TO BOTTOM OF FOOTING ELEVATION, ITEM 529.15.

STATE OF VERMONT
AGENCY OF TRANSPORTATION

Town Of	SEARSBURG	Bridge No.	24
		Log Sta.	
Highway No.	VT. RTE. 9	Surv. Sta.	116+00
VT. RTE.9 OVER BOND BROOK			
PLAN			
Designed By M. GOGUEN		Drawn by J. LAGONE	
Checked By M. OLSTAD	Date 12/2001	Bridge Design Supervisor M. OLSTAD	Date 12/2001
PROJECT SEARSBURG - WILMINGTON		PROJECT NO. NHF 010-1(18)	
I.G.C. Info.			
Bridge Sheet No. BR100		Sheet 111 OF 435	

CLOUGH, HARBOUR & ASSOCIATES LLP
ENGINEERS, SURVEYORS, PLANNERS & LANDSCAPE ARCHITECTS
8 WINNERS CIRCLE ALBANY, NEW YORK, 12205

FILE NAME =u:\9755\MSTN\15\brdg24\24_plan.plt
DATE/TIME =12/17/01
USER =2225

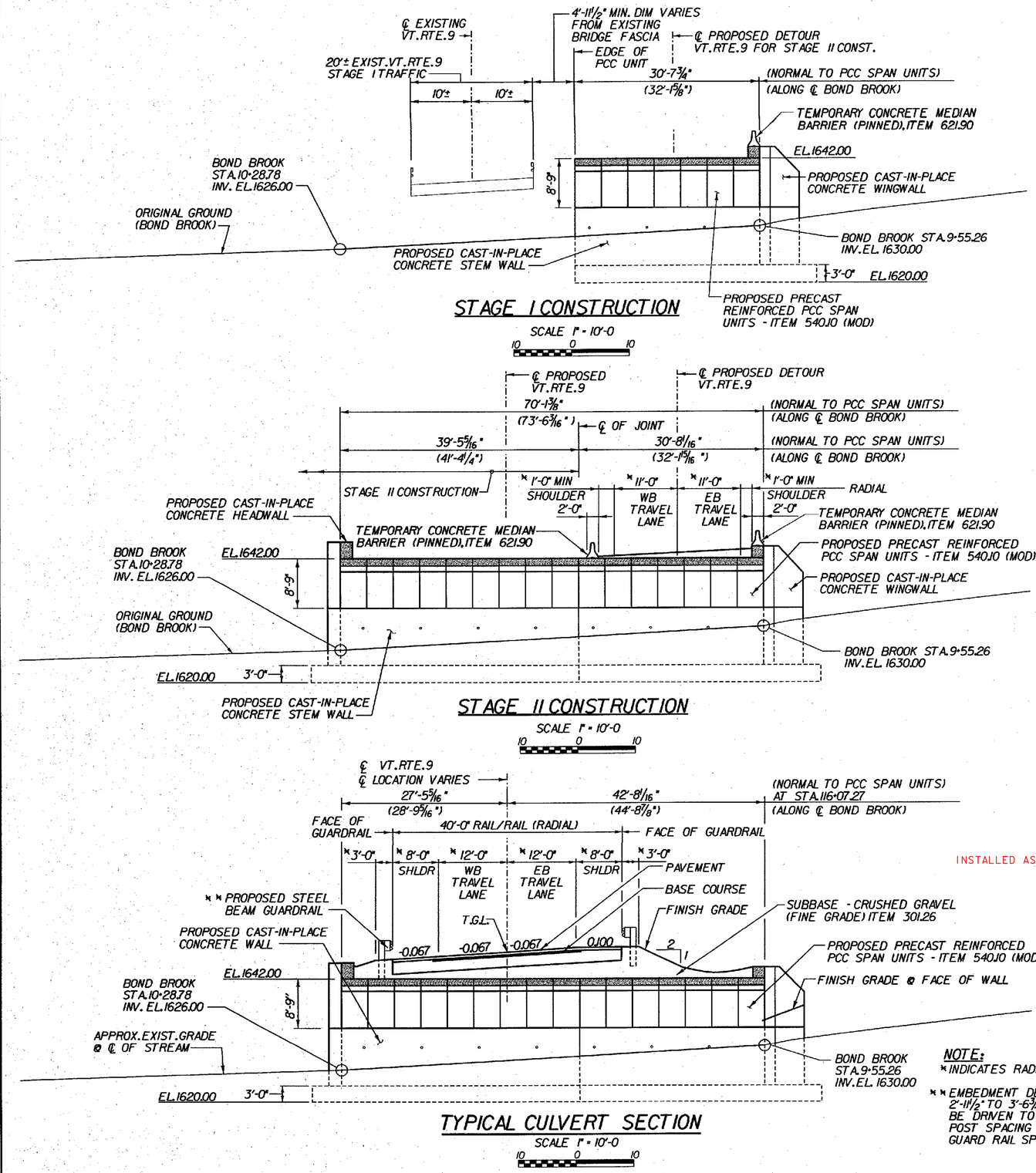

INSTALLED AS PER PLAN.

NOTE:

* INDICATES RADIAL DIMENSIONS

** EMBEDMENT DEPTH VARIES FROM 2'-11½" TO 3'-6¾" POST SHALL BE DRIVEN TO ELEVATION 1642.00. POST SPACING SHOULD BE ½ STANDARD GUARD RAIL SPACING AT BRIDGE.

FILE NAME = u:\0755\MSTN\15\br-dg24\24_sec-dck.DGN
DATE/TIME = 4/22/2002 11:22:23
USER = ERIC

FINAL HYDRAULICS REPORT

HYDROLOGIC DATA

DRAINAGE AREA= 3.14 SQUARE MILES
CHARACTER OF TERRAIN: MOUNTAINOUS AND FORESTED
CHARACTER & TYPE OF STREAM: PERENNIAL, FLASHY, SUPERCRITICAL AND SINUOUS
NATURE OF STREAMBED: GRAVEL, COBBLES TO LARGE BOULDERS

Q2.33= 250 CFS
Q10= 600 CFS
Q25= 800 CFS
Q50= 1000 CFS
Q100= 1200 CFS
Q500= 1600 CFS

DATE OF FLOOD OF RECORD: UNKNOWN
WATER SURFACE ELEV.: UNKNOWN ESTIMATED DISCHARGE: UNKNOWN
NATURAL STREAM VELOCITY @ FLOOD OF RECORD @ Q50= 12.8 FPS
ICE CONDITIONS: MODERATE DEBRIS: MODERATE
DOES THE STREAM REACH MAXIMUM HIGHWATER ELEVATION RAPIDLY? YES
IS ORDINARY RISE RAPID? YES
IS STAGE AFFECTED BY UPSTREAM OR DOWNSTREAM CONDITIONS? YES
IF YES, DESCRIBE. CONFLUENCE WITH THE DEERFIELD RIVER AT THE OUTLET OF THIS STRUCTURE

WATERSHED STORAGE 1% HEADWATERS UNIFORM THROUGHOUT WATERSHED X
IMMEDIATELY ABOVE SITE

EXISTING STRUCTURE

STRUCTURE TYPE: SINGLE SPAN CONCRETE T-BEAM YEAR BUILT: 1932
CLEAR SPAN (NORMAL TO STREAM): 24.7 FT.
VERTICAL CLEARANCE ABOVE STREAMBED: 7.8 FT.
WATERWAY OF FULL OPENING: 185 SQ. FT.
DISPOSITION OF STRUCTURE: REMOVE

TYPE OF MATERIAL UNDER SUBSTRUCTURE: REFER TO BORING LOGS

WATER SURFACE ELEV. @ Q2.33= 1631.0 FT. (HW = 3.3 FT.) VELOCITY= 6.9 FPS
Q10= 1632.3 FT. (HW = 4.6 FT.) " = 10.6 FPS
Q25= 1632.9 FT. (HW = 5.2 FT.) " = 11.9 FPS
Q50= 1633.3 FT. (HW = 5.4 FT.) " = 13.0 FPS
Q100= 1634.7 FT. (HW = 7.0 FT.) " = 14.0 FPS

LONG TERM STREAM BED CHANGES: NONE NOTED

IS THE ROADWAY OVERTOPPED BELOW THE Q100? NO FREQUENCY: ABOVE Q100
RELIEF ELEVATION: 1638 FT. DISCHARGE OVER ROAD @ Q100: NONE

UPSTREAM STRUCTURE #1: TOWN: SEARSBURG DISTANCE: 1750 FT.
HIGHWAY NO.: TH3 STRUCTURE NO.: 4
STRUCTURE TYPE: PIPE ARCH
CLEAR SPAN: 6 FT. CLEAR HEIGHT: 4 FT.
YEAR BUILT: UNKNOWN FULL WATERWAY: 18.5 SQ. FT.

UPSTREAM STRUCTURE #2: TOWN: N/A DISTANCE:
HIGHWAY NO.: STRUCTURE NO.:
STRUCTURE TYPE:
CLEAR SPAN: CLEAR HEIGHT:
YEAR BUILT: FULL WATERWAY:

DOWNSTREAM STRUCTURE: TOWN: N/A - CONFLUENCE WITH DEERFIELD RIVER DISTANCE:
HIGHWAY NO.: STRUCTURE NO.:
STRUCTURE TYPE:
CLEAR SPAN: CLEAR HEIGHT:
YEAR BUILT: FULL WATERWAY:

PROPOSED STRUCTURE

STRUCTURE TYPE: SINGLE SPAN PRE-CAST CONCRETE BRIDGE

CLEAR SPAN (NORMAL TO STREAM): 32.0 FT.
VERTICAL CLEARANCE ABOVE STREAMBED: 10.5 FT.
WATERWAY OF FULL OPENING: 340 SQ. FT.

WATER SURFACE ELEV. @ Q2.33 = 1633.3 FT. (HW = 3.5 FT.) VELOCITY = 6.7 FPS
" Q10 = 1634.0 FT. (HW = 4.2 FT.) " = 9.5 FPS
" Q25 = 1634.4 FT. (HW = 4.6 FT.) " = 10.7 FPS
" Q50 = 1634.7 FT. (HW = 4.9 FT.) " = 11.7 FPS
" Q100 = 1634.9 FT. (HW = 5.1 FT.) " = 12.6 FPS

IS THE ROADWAY OVERTOPPED BELOW THE Q100? NO FREQUENCY: ABOVE Q100
RELIEF ELEVATION: 1646 FT. DISCHARGE OVER ROAD @ Q100: NONE

AVERAGE LOW ELEVATION OF SUPERSTRUCTURE: 1640.5 FT.
VERTICAL CLEARANCE @ Q100 = @ Q50= 4.2 FT.

SCOUR: NO CONTRACTION SCOUR AT Q100 OR Q500

REQUIRED CHANNEL PROTECTION: TYPE IV STONE FILL

PERMIT INFORMATION

AVERAGE DAILY FLOW: 10 CFS
ORDINARY LOW WATER: 5 CFS DEPTH: 0.5 FT.
ORDINARY HIGH WATER: 80 CFS DEPTH: 1.5 FT.

ADDITIONAL COMMENTS

** LOAD RATINGS SHALL BE SUPPLIED BY PCC SPAN UNIT FABRICATOR (DESIGNER) AND PLACED INTO THE TABLE BY THE ENGINEER-IN-CHARGE

ADDITIONAL INFORMATION

* HEADWATER (HW) DEPTHS ARE PROVIDED TO GIVE A COMPARISON BETWEEN THE TWO STRUCTURES.

CLOUGH, HARBOUR & ASSOCIATES LLP
ENGINEERS, SURVEYORS, PLANNERS & LANDSCAPE ARCHITECTS
11 WINNERS CIRCLE ALBANY, NEW YORK, 12205

DESIGN CRITERIA:
1. DESIGN LIVE LOAD AASHTO HS 25
2. DESIGN SPAN 33'-6"
3. ALLOWABLE LOAD FOR SPREAD FOOTINGS ON SOIL 2.4 TSF FOR 8' WIDE FOOTING, 3.0 TSF FOR 12' WIDE FOOTING ON LEDGE
4. ALLOWABLE LOAD FOR PILING N/A TYPE ESTIMATED LENGTH
5. STRUCTURAL STEEL N/A
6. REINFORCING STEEL AASHTO GRADE 60 M31 BILLET STEEL
7. CONCRETE CLASS B (PC-B) - f'c=3500 PSI

TRAFFIC MAINTENANCE:
1. IS TRAFFIC TO BE MAINTAINED? YES IF YES, ON EXISTING STRUCTURE YES OR ON TEMPORARY BRIDGE
2. TEMPORARY BRIDGE REQUIREMENTS: ONE OR TWO WAY N/A TRAFFIC CONTROL SIGNALS REQUIRED
MINIMUM CLEAR SPAN (NORMAL TO STREAM): VERTICAL CLEARANCE ABOVE STREAMBED:
WATERWAY OF FULL OPENING:
ARE SIDEWALKS REQUIRED? IF SO, ON WHAT SIDE?
STRUCTURE TYPE:

** LOAD FACTOR LOAD RATING (TONS)

LOADING LEVELS (LOAD FACTOR)	TRUCK H	HS	3S2	6 AXLE	3A.STR.	4A.STR.	5A.SEMI
INVENTORY A = 2.17; B = 1.00							
POSTED A = 1.55; B = 1.40							
OPERATING A = 1.30; B = 1.67							

$RF = \frac{\emptyset M_N - 1.3\ M_{DL}}{A \times M_{LL+I}}$

$\frac{.95\ F_Y\ S_{LL+I} - M_{DL}\frac{S_{LL+I}}{S_{DL}} - M_{SDL}\frac{S_{LL+I}}{S_{SDL}}}{1.67\ M_{LL+I}}$

PROJECTED TRAFFIC DATA

YEAR	ADT	DHV	% D	% T	% ADTT

20 year ESAL for flexible pavement from 2000 to 2020: 4,825,000
40 year ESAL for flexible pavement from 2000 to 2040: 17,229,000
Design speed: 100 KM/H

STATE OF VERMONT
AGENCY OF TRANSPORTATION

Town Of SEARSBURG	Bridge No. 24
Highway No. VT. RTE. 9	Log Sta.
	Surv. Sta.

VT. RTE.9 OVER BOND BROOK

PRELIMINARY INFORMATION

Designed By M. GOGUEN/D. VIENI	Drawn by J. LAGONE
Checked By M. OLSTAD Date 2/2002	Bridge Design Supervisor M. OLSTAD Date 2/2002
PROJECT SEARSBURG - WILMINGTON	PROJECT NO. NHF 010-1(18)
I.G.C. Info.	
Bridge Sheet No. BRI01	Sheet 112 OF 435

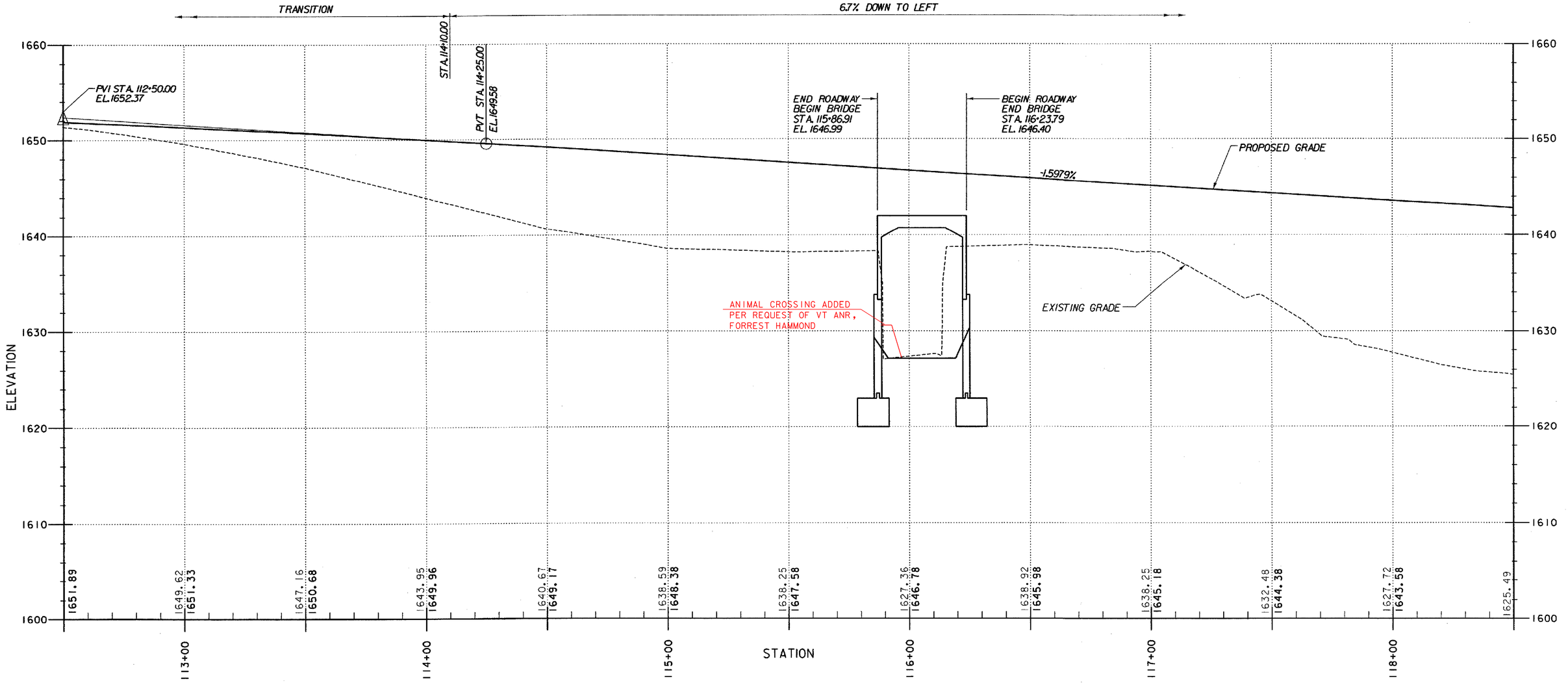

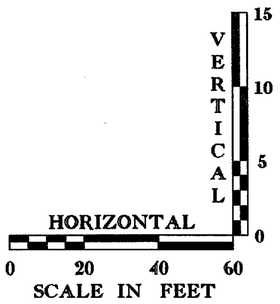

PROFILE - VT. RTE. 9 OVER BOND BROOK- BR 24

STATE OF VERMONT
AGENCY OF TRANSPORTATION

Town Of SEARSBURG	Bridge No. 24
Highway No. VT. RTE. 9	Log Sta.
	Surv. Sta.
VT. RTE.9 OVER BOND BROOK	
PROFILE	
Designed By M. GOGUEN	Drawn by K. DETRICK
Checked By M. OLSTAD Date 12/2001	Bridge Design Supervisor M. OLSTAD Date 12/2001
PROJECT SEARSBURG - WILMINGTON	PROJECT NO. NHF 010-1(18)
I.G.C. Info.	
Bridge Sheet No. BRI02	Sheet 113 OF 435

CHA CLOUGH, HARBOUR & ASSOCIATES LLP
ENGINEERS, SURVEYORS, PLANNERS & LANDSCAPE ARCHITECTS
11 WINNERS CIRCLE ALBANY, NEW YORK, 12205

FILE NAME =u:\97555\mastr\15\brdg24\24_profile.plt
DATE/TIME =12/21/2001
USER =EGA

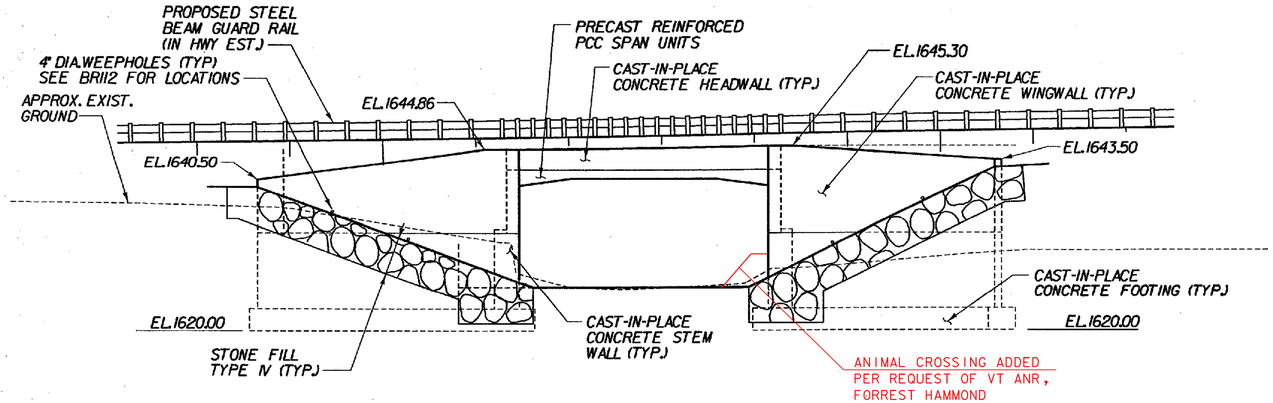

EAST ELEVATION B-B

SCALE 1" = 10'-0

10 0 10

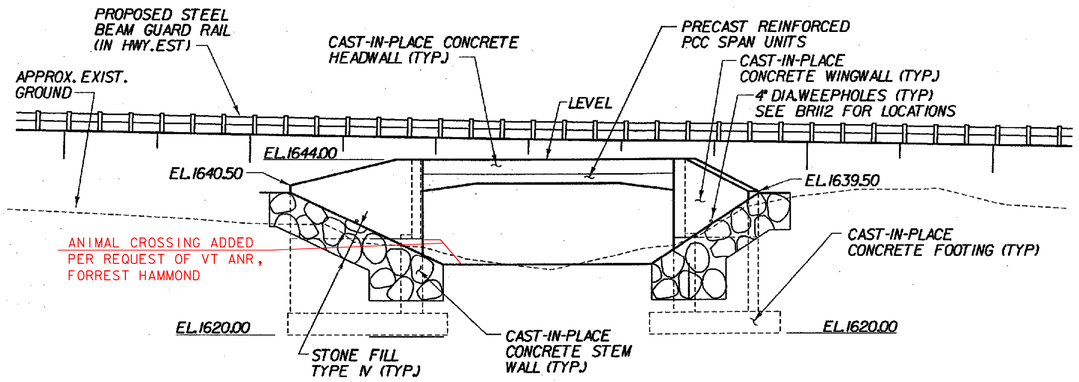

WEST ELEVATION A-A

SCALE 1" = 10'-0

10 0 10

PRE-CAST REINFORCED PCC SPAN UNIT NOTES:

1. THE BRIDGE SUPERSTRUCTURE IS A PATENTED STRUCTURAL SYSTEM. THE ONLY COMPANY IN THE AREA LICENSED TO MANUFACTURE THE UNITS IS THE FORT MILLER COMPANY INC., P.O. BOX 98 SCHUYLERVILLE, N.Y. 12871 (TEL 518 695-5000). CONTRACTOR MAY SUBSITUTE AN EQUIVILANT FOR APPROVAL.
2. DESIGN OF PRECAST UNITS SHALL BE SUBMITTED BY CONTRACTOR FOR APROVAL
3. SHOP DRAWINGS FOR THE UNITS SHALL CONTAIN AS A MINIMUM THE FOLLOWING:
   - PLAN LAYOUT, INCLUDING LENGTH, WIDTH, SKEW ANGLE AND ORIENTATION.
   - CONCRETE MIX DESIGN INCLUDING ADMIXTURES.
   - CONCRETE SURFACE FINISH
   - FABRICATION AND CURING PROCEDURES.
   - LIFTING AND TRANSPORTATION DETAILS.
   - CROSS SECTIONS SHOWING STRUCTURAL DEPTHS AND REINFORCEMENT.
   - FASTENER AND CONCRETE INSERT TYPE, STRENGTHS AND LOCATION OF USE.
   - REINFORCEMENT SCHEDULE.
   - TOLERANCES.

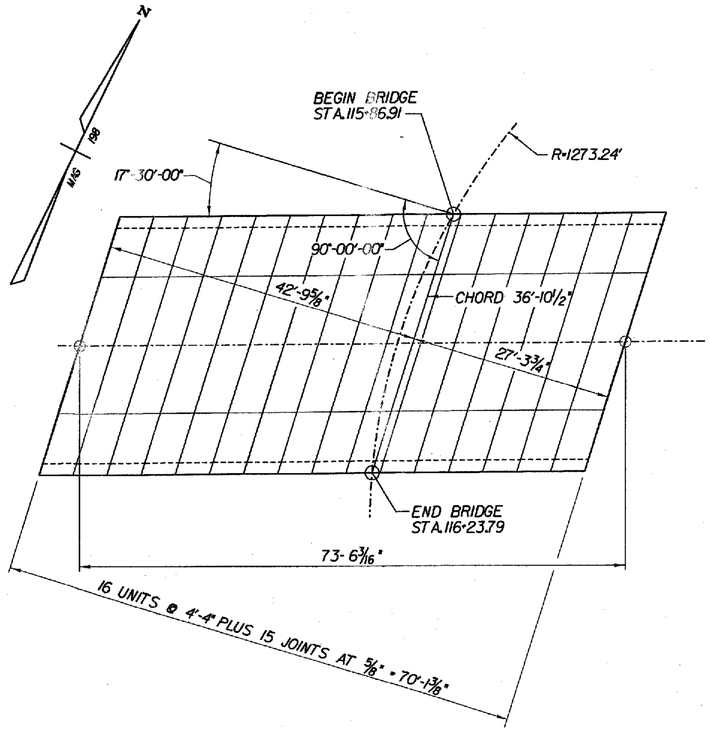

PCC SPAN UNIT SCHEMATIC

(NOT TO SCALE)

STATE OF VERMONT
AGENCY OF TRANSPORTATION

Town Of SEARSBURG	Bridge No. 24
Highway No. VT. RTE. 9	Log Sta. / Surv. Sta.
VT. RTE. 9 OVER BOND BROOK	
EAST & WEST ELEVS. PCC SPAN UNIT SCHEMATIC	
Designed By M. GOGUEN	Drawn by J. LAGONE
Checked By M. OLSTAD Date 12/2001	Bridge Design Supervisor M. OLSTAD Date 12/2001
PROJECT SEARSBURG - WILMINGTON	PROJECT NO. NHF 010-1(18)
I.G.C. Info.	
Bridge Sheet No. BRI03	Sheet 114 OF 435

CHA CLOUGH, HARBOUR & ASSOCIATES LLP
ENGINEERS, SURVEYORS, PLANNERS & LANDSCAPE ARCHITECTS
11 WINNERS CIRCLE ALBANY, NEW YORK, 12205

FILE NAME = u:\1755\WSTN\15\br-dg24\24_e&w_elevs.plt
DATE/TIME = 12/13/2001
USER = dpd

BRIDGE QUANTITY SHEET

STATE OF VERMONT
AGENCY OF TRANSPORTATION
STRUCTURES DIVISION

	ITEM NO.	ITEM	UNIT	QUANTITY BREAKDOWN							TOTAL	FINAL
				SUPER-STRUCTURE	ABUTMENT 1	PIER 1	PIER 2	ABUTMENT 2	APPROACH SLABS	CHANNEL QUANTITIES	MISC.	
(R)	203.32	GRANULAR BORROW	CY		400			500				900
	204.30	GRANULAR BACKFILL FOR STRUCTURES	CY		1042			980				2022
	208.30	COFFERDAM EXCAVATION, EARTH	CY		122			78				200
	208.35	COFFERDAM EXCAVATION, ROCK	CY		105			68				173
	208.40	COFFERDAM @ BR24, ABUT. ONE LT	LS		1							1
	208.40	COFFERDAM @ BR24, ABUT. ONE RT.	LS		1							1
	208.40	COFFERDAM @ BR24, ABUT. TWO LT	LS					1				1
	208.40	COFFERDAM @ BR24, ABUT. TWO RT.	LS					1				1
(R)	301.26	CRUSHED GRAVEL (FINE GRADED)	CY	227								227
	501.25	CONCRETE, CLASS B (HPC-B)	CY	14	362			354				730
	507.15	REINFORCING STEEL	LB	1320	50,545			50,240				102,105
	514.10	WATER REPELLENT	GAL	21	4			4				29
	519.20	SHEET MEMBRANE WATERPROOFING	SY	287								287
	529.15	REMOVAL OF STRUCTURE STA. 116+00 LT.	EA								1	1
	540.10	PRECAST CONCRETE BOX (MOD)	LS	1								1
	613.13	STONE FILL, TYPE IV	CY		280			464				744
	649.31	GEOTEXTILE UNDER STONE FILL	SY		162			302				464
	651.40	GRUBBING MATERIAL	SY		112			226				338

(R) DENOTES ROADWAY ITEM

dd096bql.1

BRIDGE(S) AT STATION(S) 116+00
LOCATION(S) VT. RTE. 9 OVER BOND BROOK

PREPARED BY: D. STECIAK
CHECKED BY: J. LAGONE
SUPERVISOR: M.W. OLSTAD

PROJECT: SEARSBURG - WILMINGTON PROJECT NO: NHF 010-1(18)
BR 104 OF SHEET NO: 115 OF 435

SOIL CLASSIFICATION

	AASHTO
A1	Gravel and Sand
A3	Fine Sand
A2	Silty or Clayey Gravel and Sand
A4	Silty Soil - Low Compressibility
A5	Silty Soil - Highly Compressible
A6	Clayey Soil - Low Compressibility
A7	Clayey Soil - Highly Compressible

ROCK QUALITY DESIGNATION

R.Q.D. (%)	ROCK DESCRIPTION
<25	Very Poor
25 to 50	Poor
51 to 75	Fair
76 to 90	Good
>90	Excellent

SHEAR STRENGTH

UNDRAINED SHEAR STRENGTH IN P.S.F.	CONSISTENCY
<250	Very Soft
250-500	Soft
500-1000	Med. Stiff
1000-2000	Stiff
2000-4000	Very Stiff
>4000	Hard

CORRELATION GUIDE OF "N" TO DENSITY/CONSISTENCY

DENSITY (GRANULAR SOILS)		CONSISTENCY (COHESIVE SOILS)	
N	DESCRIPTIVE TERM	N	DESCRIPTIVE TERM
<5	Very Loose	<2	Very Soft
5-10	Loose	2-4	Soft
11-24	Med. Dense	5-8	Med. Stiff
25-50	Dense	9-15	Stiff
>50	Very Dense	16-30	Very Stiff
		31-60	Hard
		>60	Very Hard

COMMONLY USED SYMBOLS

▼	Water Elevation
⊗	Standard Penetration Boring
⊕	Auger Boring
⊙	Rod Sounding
S	Sample
N	Standard Penetration Test Blow Count Per Foot For: 2" O.D. Sampler 1 3/8" I.D. Sampler Hammer Weight Of 140 Lbs. Hammer Fall Of 30"
VS	Field Vane Shear Test
US	Undisturbed Soil Sample
B	Blast
DC	Diamond Core
MD	Mud Drill
WA	Wash Ahead
HSA	Hollow Stem Auger
AX	Core Size 1 1/8"
BX	Core Size 1 5/8"
NX	Core Size 2 1/8"
M	Double Tube Core Barrel Used
LL	Liquid Limit
PL	Plastic Limit
PI	Plasticity Index
NP	Non Plastic
w	Moisture Content (Dry Wgt. Basis)
D	Dry
M	Moist
MTW	Moist To Wet
W	Wet
Sat	Saturated
Bo	Boulder
Gr	Gravel
Sa	Sand
Si	Silt
Cl	Clay
HP	Hardpan
Le	Ledge
NLTD	No Ledge To Depth
CNPF	Can Not Penetrate Further
TLOB	To Ledge Or Boulder
NR	No Recovery
Rec.	Recovery
%Rec.	Percent Recovery
RQD	Rock Quality Designation
CBR	California Bearing Ratio
<	Less Than
>	Greater Than
R	Refusal (N > 100)

COLOR

blk	Black	pnk	Pink
bl	Blue	pu	Purple
brn	Brown	rd	Red
dk	Dark	tn	Tan
gry	Gray	wh	White
gn	Green	yel	Yellow
lt	Light	mltc	Multicolored
or	Orange		

DEFINITIONS (AASHTO)

BEDROCK (LEDGE) - Rock in its native location of indefinite thickness.

BOULDER - A rock fragment with an average dimension > 12 inches.

COBBLE - Rock fragments with an average dimension between 3 and 12 inches.

GRAVEL - Rounded particles of rock < 3" and > 0.0787" (#10 sieve).

SAND - Particles of rock < 0.0787" (#10 sieve) and > 0.0029" (#200 sieve).

SILT - Soil < 0.0029" (#200 sieve), non or slightly plastic and exhibits no strength when air-dried.

CLAY - Fine grained soil, exhibits plasticity when moist and considerable strength when air-dried.

VARVED - Alternate layers of silt and clay.

HARDPAN - Extremely dense soil, cemented layer, not softened when wet.

MUCK - Soft organic soil (containing > 10% organic material.

MOISTURE CONTENT - Weight of water divided by dry weight of soil.

FLOWING SAND - Granular soil so saturated (loose) that it flows into drill casing during extraction of wash rod.

STRIKE - Angle from magnetic north to line of intersection of bed with a horizontal plane.

DIP - Inclination of bed with a horizontal plane.

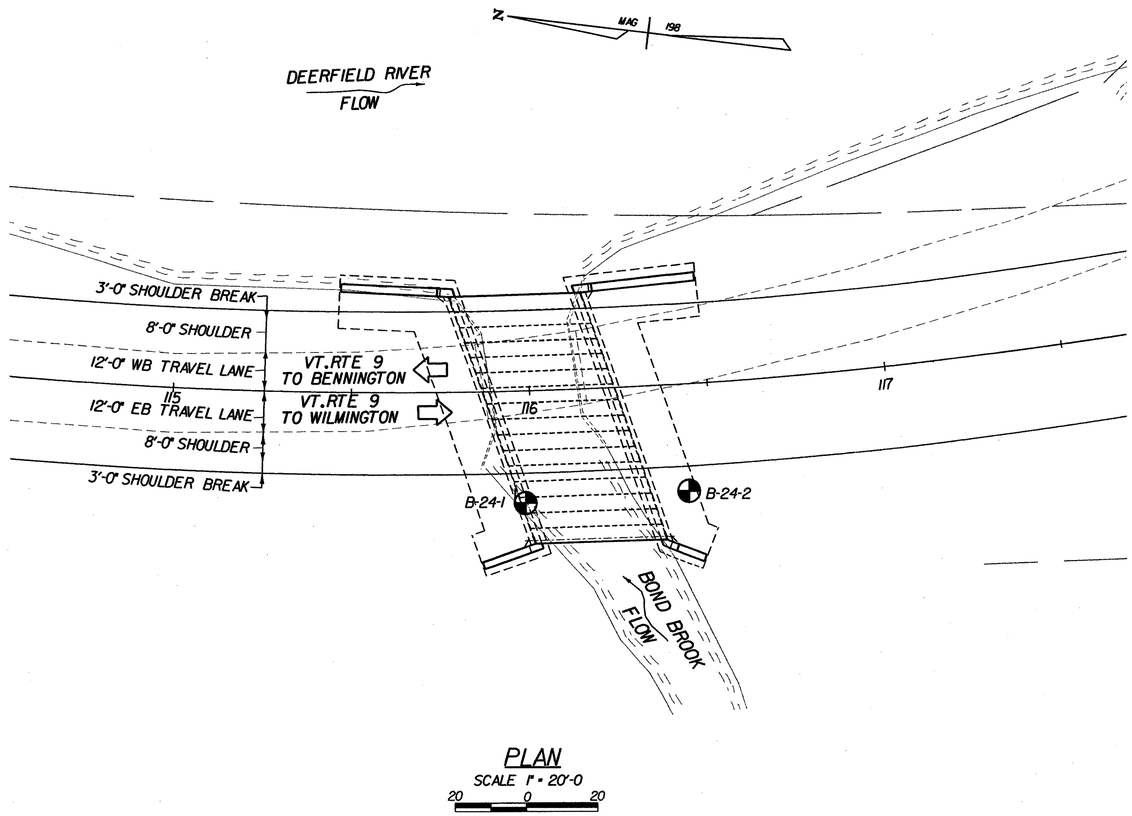

PLAN

SCALE 1" = 20'-0

20 0 20

CURVE DATA

REV P.C. = STA. 113+61.81
REV P.T. = STA. 122+89.88
Δ = 41°-45'-47.87" LT.
R = 1273.24'
Dc = 4°-30'
L = 928.07'
T = 485.74'
E = 89.51'

BANK: 0.067 FT/FT

TABLE OF BORING LOCATION

BORING NO.	STATION	OFFSET	GROUND ELEV.	ELEV. TLOB
B-24-1	115+98.10	31.20' RT.	1630.75	NLTD
B-24-2	116+43.07	29.90' RT.	1635.85	NLTD

LEGEND:

⊗ STANDARD PENETRATION BORING

GENERAL NOTES

1. The subsurface explorations shown herein were started on 12/28/00 and completed on 1/9/01 by New England Boring Contractors under the supervision of Clough, Harbour & Associates LLP.

2. Soil and rock classifications, properties and descriptions are based on engineering interpretation from available subsurface information by the Agency and may not necessarily reflect actual variations in subsurface conditions that may be encountered between individual boring or sample locations.

3. Observed water levels and/or conditions indicated are as recorded at the time of exploration and may vary according to the prevailing rainfall, methods of exploration and other factors.

4. Engineering judgement was exercised in preparing the subsurface information presented herein. Analysis and interpretation of subsurface data was performed and interpreted for Agency design and estimating purposes. Presentation of the information in the Contract is intended to provide the Contractor access to the same data available to the Agency. The subsurface information is presented in good faith and is not intended as a substitute for personal investigation, independent interpretation, independent analysis or judgement by the Contractor.

5. Pictorial structure details shown on the boring plan layout or soils profile are for illustrative purposes only and may not accurately portray final contract details.

6. Terminology used on boring logs to describe the hardness, degree of weathering, and spacing of fractures, joints and other discontinuities in the bedrock is defined in the AASHTO Manual on Subsurface Investigations, 1988.

CLOUGH, HARBOUR & ASSOCIATES LLP
ENGINEERS, SURVEYORS, PLANNERS & LANDSCAPE ARCHITECTS

STATE OF VERMONT
AGENCY OF TRANSPORTATION

Town Of SEARSBURG	Bridge No. 24
Highway No. VT. RTE. 9	Log Sta. / Surv. Sta.
VT. RTE.9 OVER BOND BROOK	
BORING INFORMATION SHEET	
Designed By M. GOGUEN	Drawn by J. LAGONE
Checked By M. OLSTAD Date 12/2001	Bridge Design Supervisor M. OLSTAD Date 12/2001
PROJECT SEARSBURG - WILMINGTON	PROJECT NO. NHF 010-1(18)
I.G.C. Info.	
Bridge Sheet No. BRI05	Sheet 116 OF 435

FILE NAME = U:\9755\MSTN\15\br-dgn24\24_bor-sqln.PLT
DATE/TIME = 12/13/2001
USER = BB4

CLOUGH, HARBOUR & ASSOCIATES LLP
ENGINEERS, SURVEYORS, PLANNERS & LANDSCAPE ARCHITECTS

VT. RTE. 9 OVER DEERFIELD RIVER
SUBSURFACE LOG
HOLE NUMBER B-24-1

PROJECT NUMBER: 9755.07.01 12/29/00 — PAGE 1 OF 2

LOCATION: SEARSBURG, VT
DRILL FLUID: WATER @ 8 FT. DRILLING METHOD: 3" FJC
CLIENT: STATE OF VERMONT AGENCY OF TRANSPORTATION
CONTRACTOR: NEW ENGLAND BORING CONTRACTORS, INC.
DRILLER: T. CARPENTER INSPECTOR: J. COPPOLA
START DATE: 12-28-00 FINISH DATE: 12-28-00
SURFACE ELEV: 1630.75 (FT; EST.) CHECKED BY: MSO

WATER LEVEL OBSERVATIONS DURING DRILLING	DATE	TIME	WATER DEPTH (FT)	CASING BOTTOM (FT)	HOLE BOTTOM (FT)

SAMP./CORE NUMBER	SAMP./CORE LEN. (FT)	SAMP./CORE RECOVERY (FT)	BLOWS PER 6" ON SPLIT SPOON SAMPLER	'N' VALUE OR RQD	SAMPLE	DEPTH (FEET)	GRAPHICS	DESCRIPTION AND CLASSIFICATION	ELEVATION (FEET)	REMARKS ON CHARACTER OF DRILLING, WATER RETURN, ETC.	WATER LEVELS AND/OR WELL DATA
S-1	2	1.3	5-4-6-4	10				=UF.C. GRAVEL=U, SOME F.M.C. SAND, LITTLE SILT, BK. BROWN, LOOSE, MOIST (A-1-A)	1630		
S-2	1	0.5	15-82/.5	R		5		BECOMES V. DENSE (A-1-A)			
R-1	5	2	NA					=COBBLES AND BOULDERS=U	1625	SS REFUSAL, POSSIBLE COBBLE, CORED TO 10 FT. COBBLES AND BOULDERS TO END OF BORING	
S-3	2	1	43-36-37-44	73		10		=UF. SAND=U, SOME SILT, LITTLE M.C. SAND, GRAVEL, GRAY, V. DENSE, MOIST (A-4)	TRACE 1620	EL. 1620 FT. PROPOSED B.O.F. ELEVATION GRADATION PERFORMED ON SAMPLES S-3 AND S-4 (COMPOSITE)	
S-4	2	1.7	23-36-37-62	73		15		GRADES TO TRACE CLAY (A-4)	1615	ROLLER BIT TO 15 FT. ROLLER BIT TO 20 FT.	
S-5	2	0.8	18-29-29-32	58		20		SIMILIAR SOIL (A-4)	1610		
S-6	2	0.8	27-29-30-35	59		25		SIMILIAR SOIL (A-4) SIMILIAR SOIL (A-4) (CONTINUED)	1605	ROLLER BIT TO 25 FT.	
R-2	5	2.5	NA			30		=COBBLES AND BOULDERS=U	1600	CORED 30 FT. TO 35 FT.	
S-7	1	1	70-102/.5	R		35		=G. SAND=U, SOME SILT, LITTLE M.C. SAND, GRAVEL, GRAY/GREEN, V. DENSE, MOIST (A-4)	LITTLE 1595	F.C.	
S-8	2	0	10-19-17-21	36		40		INSUFFICIENT SAMPLE	1590	ROLLER BIT TO 45 FT.	
S-9	2	0.9	52-46-49-75	95		45		=SILT=U, SOME F. SAND, LITTLE M.C. SAND, GRAVEL, GRAY/BROWN, V. DENSE, MOIST (A-4)	TRACE F. 1585		
S-10	1	0	72-112/.5	R		50		INSUFFICIENT SAMPLE END OF BORING AT 51 FT	1580	PUSHED GRAVEL	
						55			1575		

CLOUGH, HARBOUR & ASSOCIATES LLP
ENGINEERS, SURVEYORS, PLANNERS & LANDSCAPE ARCHITECTS

VT. RTE. 9 OVER DEERFIELD RIVER
SUBSURFACE LOG
HOLE NUMBER B-24-2

PROJECT NUMBER: 9755.07.01 12/29/00 — PAGE 1 OF 2

LOCATION: SEARSBURG, VT
DRILL FLUID: WATER @ 2 FT. DRILLING METHOD: 3" FJC
CLIENT: STATE OF VERMONT AGENCY OF TRANSPORTATION
CONTRACTOR: NEW ENGLAND BORING CONTRACTORS, INC.
DRILLER: T. CARPENTER INSPECTOR: J. COPPOLA
START DATE: 1-8-01 FINISH DATE: 1-9-01
SURFACE ELEV: 1635.85 (FT; EST) CHECKED BY: MSO

WATER LEVEL OBSERVATIONS DURING DRILLING	DATE	TIME	WATER DEPTH (FT)	CASING BOTTOM (FT)	HOLE BOTTOM (FT)
	1-9-01	1515	10	15	15

SAMP./CORE NUMBER	SAMP./CORE LEN. (FT)	SAMP./CORE RECOVERY (FT)	BLOWS PER 6" ON SPLIT SPOON SAMPLER	'N' VALUE OR RQD	SAMPLE	DEPTH (FEET)	GRAPHICS	DESCRIPTION AND CLASSIFICATION	ELEVATION (FEET)	REMARKS ON CHARACTER OF DRILLING, WATER RETURN, ETC.	WATER LEVELS AND/OR WELL DATA
S-1	2	1.8	2-1-1-1	2				=UF. SAND=U, SOME SILT, MOTTLED BK. BROWN/ORANGE, V. LOOSE, MOIST (A-2-4)	1635	ROLLER BIT TO 5 FT.	
S-2	2	0	10-12-11-14	23		5		INSUFFICIENT RECOVERY	1630	NO SAMPLE, GRAVEL IN SHOE	
S-3	2	1.2	21-12-11-13	23		10		=UF. SAND=U, SOME SILT, LITTLE M.C. SAND, CLAY, GRAY/BROWN, M. DENSE, MOIST (A-4)	TRACE 1625		
S-4	2	1.5	12-13-25-30	38		15		GRADES TO TRACE CLAY, GRAY/GREEN, DENSE (A-4)	1620	EL. 1620 FT. PROPOSED B.O.F. ELEVATION	
S-5	2	1.5	30-28-33-41	61		20		GRADES TO LITTLE F.C. GRAVEL, V. DENSE (A-2-4)	1615		
S-6	0.4	0.3	100/.4	R		25		SIMILIAR SOIL (A-2-4)	1610	GRADATION PERFORMED ON SAMPLE S-7 AND S-8 (COMPOSITE)	
S-7	2	1	24-37-42-61	79		30		SIMILIAR SOIL (A-2-4)	1605		
S-8	1	0.8	63-97.5			35		GRADES TO MD C. GRAVEL (A-2-4)	1600		
S-9	2	1	36-38-42-51	80		40		SIMILIAR SOIL (A-2-4)	1595	ROLLER BIT TO 45 FT.	
S-10	1.5	1	37-49-95/.5	R		45		SIMILIAR SOIL (A-2-4)	1590		
S-11	1	0.8	75-108/.5	R		50		SIMILIAR SOIL (A-2-4) END OF BORING AT 51 FT	1585		
						55			1580		

STATE OF VERMONT
AGENCY OF TRANSPORTATION

Town Of SEARSBURG	Bridge No. 24
Highway No. VT. RTE. 9	Log Sta. / Surv. Sta.
VT. RTE.9 OVER BOND BROOK	
BORING LOGS - BR 24	
Designed By M. GOGUEN	Drawn by J. LAGONE
Checked By M. OLSTAD Date 12/2001	Bridge Design Supervisor M. OLSTAD Date 12/2001
PROJECT SEARSBURG - WILMINGTON	PROJECT NO. NHF 010-1(18)
I.G.C. Info.	
Bridge Sheet No. BR106	Sheet 117 OF 435

CLOUGH, HARBOUR & ASSOCIATES LLP
ENGINEERS, SURVEYORS, PLANNERS & LANDSCAPE ARCHITECTS
11 WINNERS CIRCLE ALBANY, NEW YORK, 12205

FILE NAME =U:\9755\MSTN\05\br-dg24\24_borelog.plt
DATE/TIME =12/13/2001
USER =664

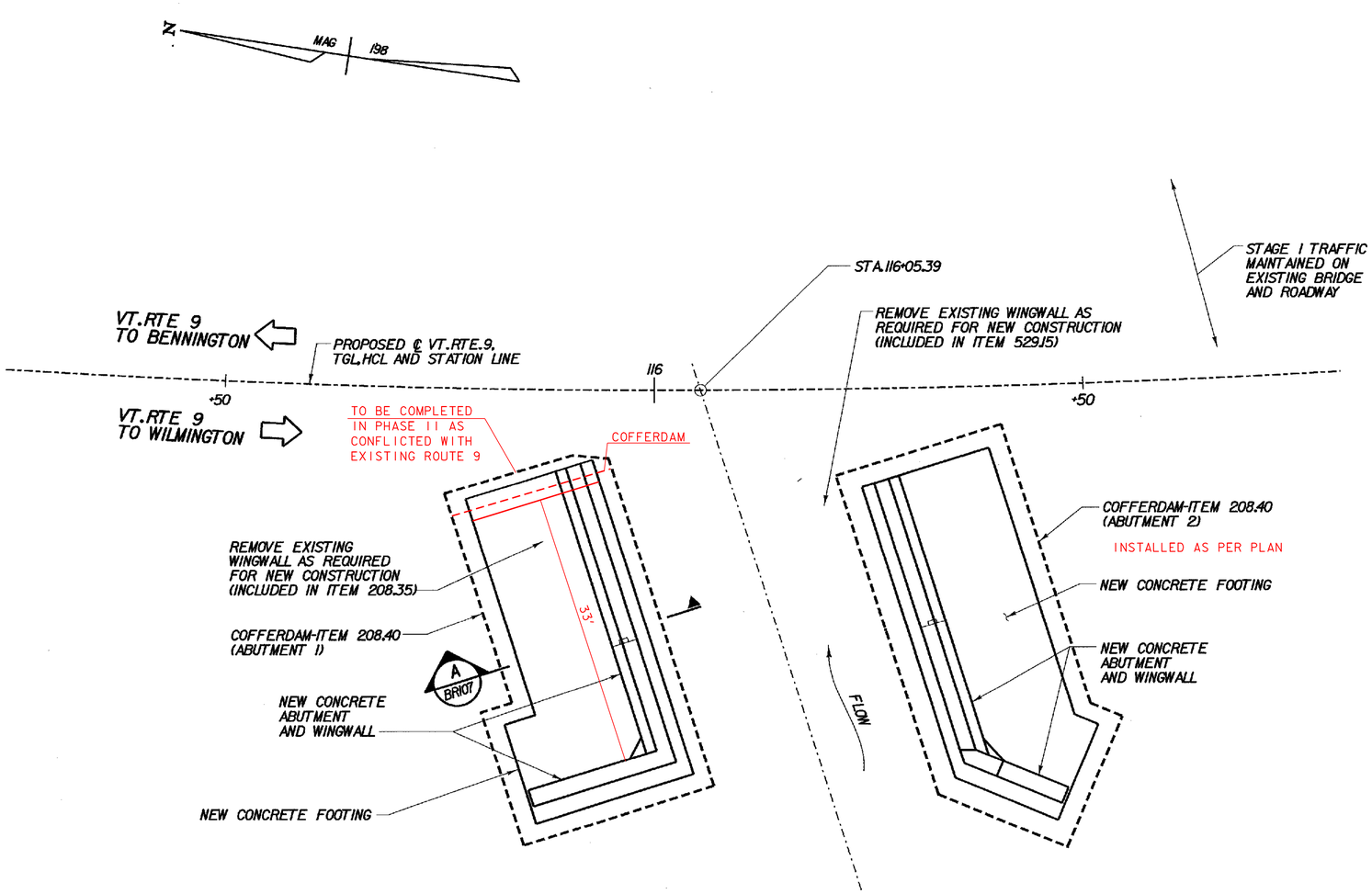

EARTHWORK PLAN (STAGE I CONSTRUCTION)

SCALE 1/8" = 1'-0
1 0 2 4 6 8

NOTE:
PRECAST CONCRETE CULVERT UNITS NOT SHOWN FOR CLARITY

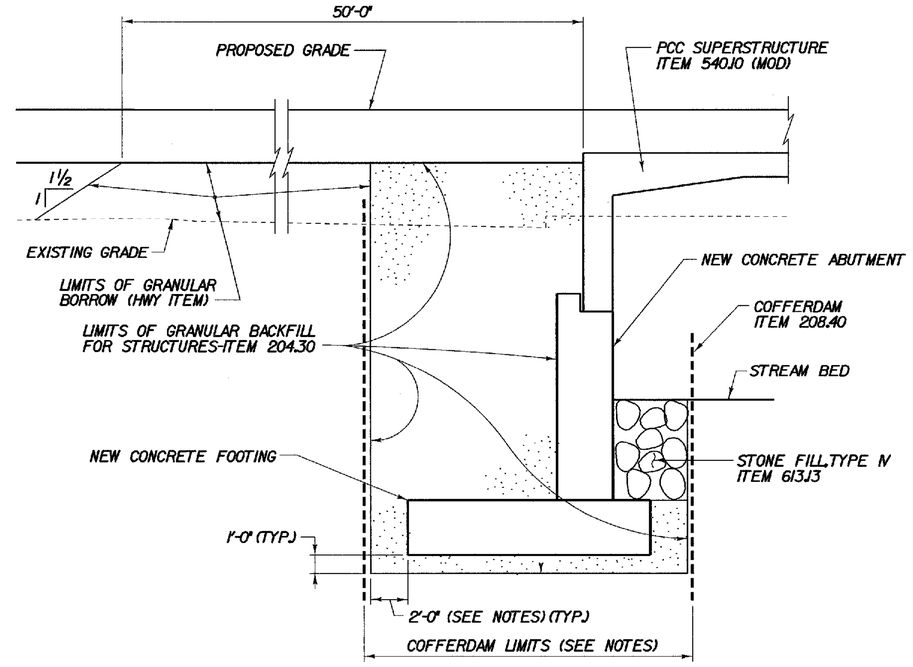

A BRI07 / A BRI08 TYPICAL ABUTMENT EARTHWORK SECTION

SCALE 1/4" = 1'-0
1 0 2 4 6

NOTES:

1. COFFERDAM LIMITS TO BE DETERMINED BY THE CONTRACTOR.
2. THE PAY LIMITS OF "COFFERDAM EXCAVATION, "ROCK" OR "EARTH" SHALL BE 2'-0" OUTSIDE THE PERIMETER OF THE FOOTING, UP TO EXISTING GROUND OR BOTTOM OF SUBBASE, WHICHEVER IS LOWER.
3. ONE FOOT UNDERCUT AS DETERMINED NECESSARY BY THE RESIDENT ENGINEER.
4. IF A COFFERDAM IS CONSTRUCTED WHICH IS LARGER THAN THE INDICATED COFFERDAM EXCAVATION PAY LIMITS, PAYMENT FOR ALL UNCLASSIFIED CHANNEL EXCAVATION, INCLUDING THAT PORTION WHICH IS INSIDE THE COFFERDAM BUT OUTSIDE THE COFFERDAM EXCAVATION PAY LIMITS, WILL BE MADE AT THE CONTRACT UNIT PRICE FOR UNCLASSIFIED CHANNEL EXCAVATION.
5. EXISTING STRUCTURE TO BE REMOVED IN ITS ENTIRETY. PORTIONS OF STRUCTURE NOT REMOVED UNDER ITEM 208.35 SHALL BE REMOVED UNDER ITEM 529.15.

CHA CLOUGH, HARBOUR & ASSOCIATES LLP
ENGINEERS, SURVEYORS, PLANNERS & LANDSCAPE ARCHITECTS
11 WINNERS CIRCLE ALBANY, NEW YORK, 12205

STATE OF VERMONT
AGENCY OF TRANSPORTATION

Town Of SEARSBURG	Bridge No. 24
Highway No. VT. RTE. 9	Log Sta. / Surv. Sta.
VT. RTE.9 OVER BOND BROOK	
EARTHWORK PLAN (STAGE I CONSTRUCTION)	
Designed By M. GOGUEN /D. VIENI	Drawn by J. LAGONE/Wm WEATHERBY
Checked By M. OLSTAD Date 2/2002	Bridge Design Supervisor M. OLSTAD Date 2/2002
PROJECT SEARSBURG - WILMINGTON	PROJECT NO. NHF 010-1(18)
L.G.C. Info.	
Bridge Sheet No. BRI07	Sheet 118 OF 435

DATE/TIME =26-FEB-2002
USER =RWhitcomb

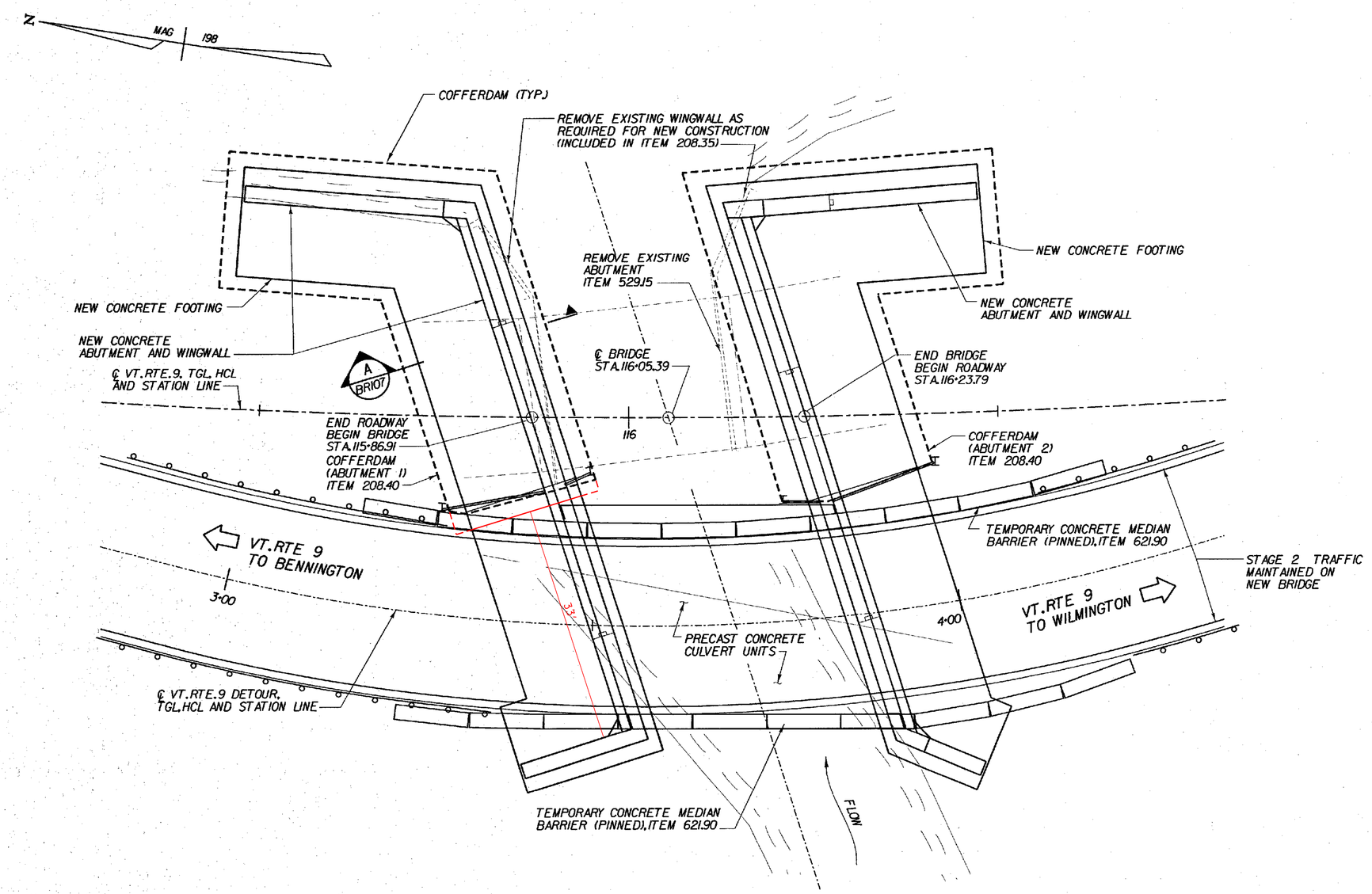

EARTHWORK PLAN (STAGE 2 CONSTRUCTION)

SCALE 1/8" = 1'-0
1 0 2 4 6 8

NOTE:
PRECAST CONCRETE CULVERT UNITS NOT SHOWN FOR CLARITY

NOTE:

1. FOR COFFERDAM NOTES, SEE BRI07.

STATE OF VERMONT
AGENCY OF TRANSPORTATION

Town Of	SEARSBURG	Bridge No. 24
Highway No.	VT. RTE. 9	Log Sta.
		Surv. Sta.
VT. RTE.9 OVER BOND BROOK		
EARTHWORK PLAN (STAGE 2 CONSTRUCTION)		
Designed By M. GOGUEN/D. VIENI		Drawn by J. LAGONE/Wm WEATHERBY
Checked By M. OLSTAD	Date 2/2002	Bridge Design Supervisor M. OLSTAD Date 2/2002
PROJECT SEARSBURG - WILMINGTON		PROJECT NO. NHF 010-1(18)
L.G.C. Info.		
Bridge Sheet No. BRI08		Sheet 119 OF 435

CHA CLOUGH, HARBOUR & ASSOCIATES LLP
ENGINEERS, SURVEYORS, PLANNERS & LANDSCAPE ARCHITECTS
8 WINNERS CIRCLE ALBANY, NEW YORK, 12205

FILE NAME =u:\3755\MSTN\15\brdg24\24_ph2enk.DGN
DATE/TIME =02/28/02
USER =2229

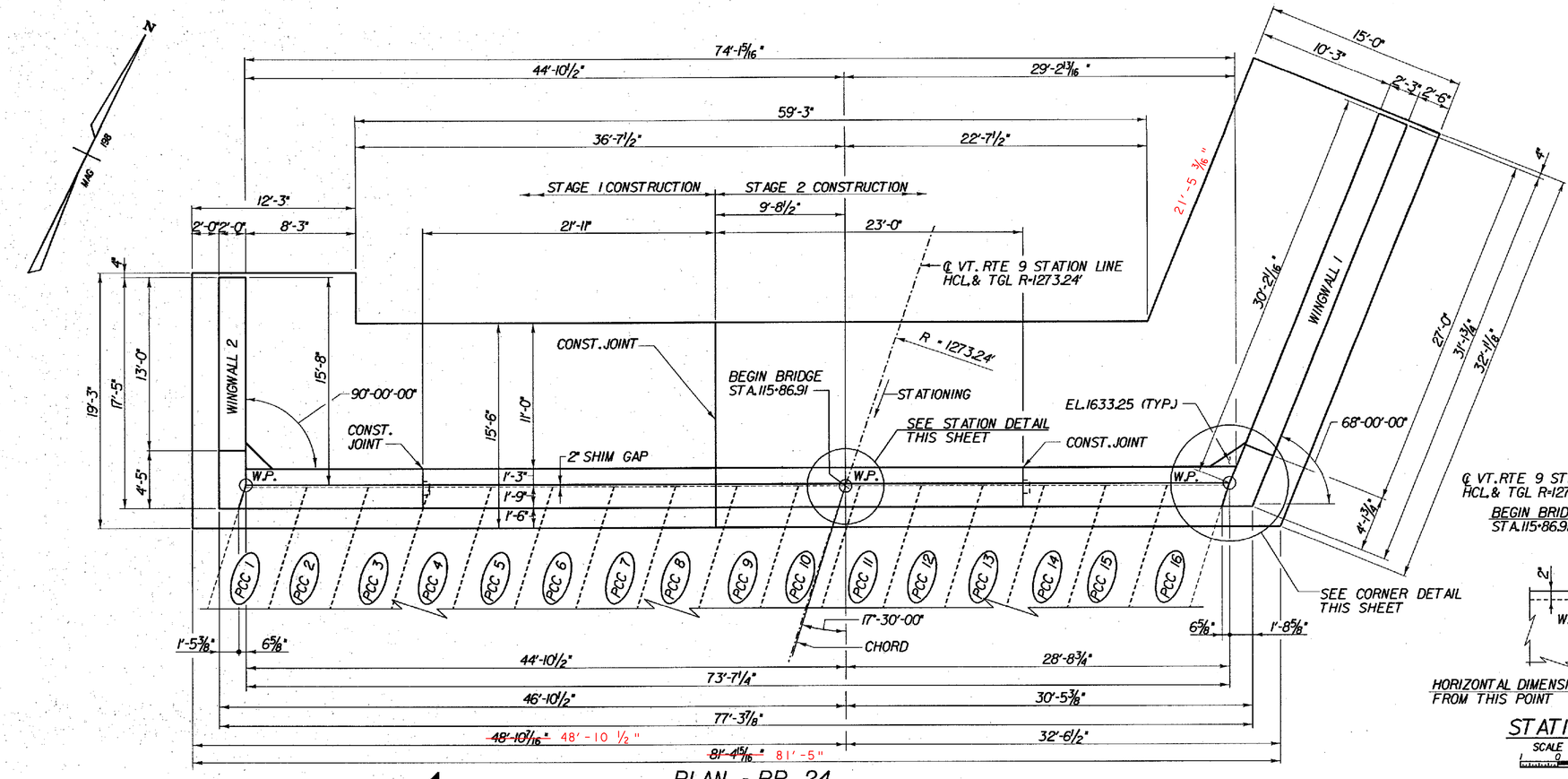

PLAN - BR 24

SCALE 1" = 5'-0

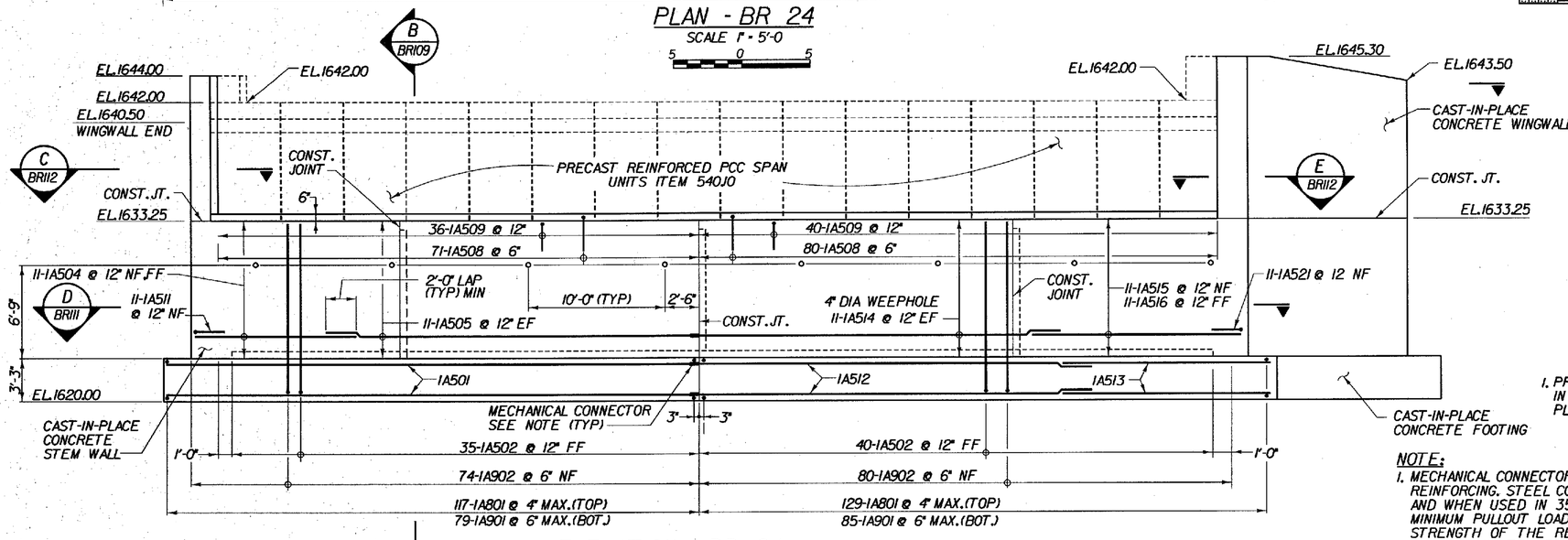

ELEVATION - BR 24

SCALE 1" = 5'-0

STATION DETAIL

SCALE 3/4" = 1'-0

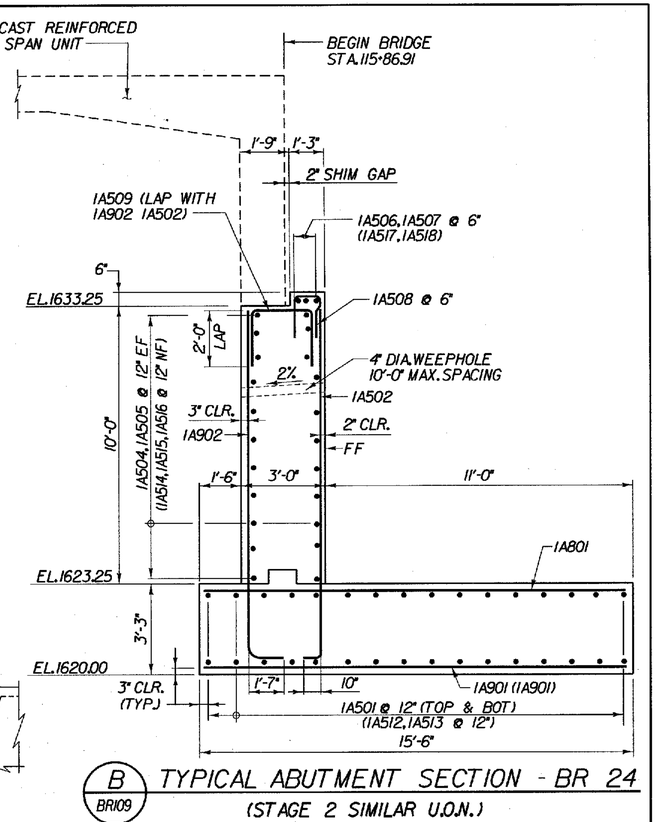

B BRI09 TYPICAL ABUTMENT SECTION - BR 24

(STAGE 2 SIMILAR U.O.N.)

SCALE 3/8" = 1'-0

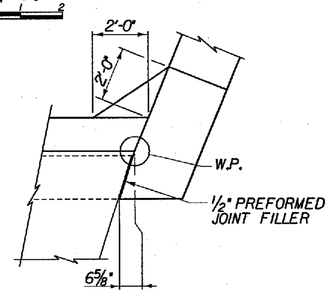

CORNER JOINT DETAIL

SCALE 3/8" = 1'-0

KEY:

NF - NEAR FACE
FF - FAR FACE
EF - EACH FACE
▲ - BARS TO BE CUT IN FIELD
◆ - FIELD BEND
3" CLR. UNLESS OTHERWISE SPECIFIED ON THE PLANS.

WINGWALL PLACEMENT NOTE:

1. PRECAST REINF. PCC SPAN UNITS SHALL BE IN PLACE BEFORE WINGWALL CONCRETE IS PLACED ABOVE THE ABUTMENT SEAT.

NOTE:

1. MECHANICAL CONNECTORS SHALL BE DESIGNED WITH #5 REINFORCING. STEEL CONNECTORS SHALL BE NON-CORROSIVE AND WHEN USED IN 3500 PSI CONCRETE, ABLE TO RESIST MINIMUM PULLOUT LOAD OF 90% OF THE MINIMUM TENSILE STRENGTH OF THE REINFORCING BAR. COST SHALL BE INCLUDED IN ITEM 507J5.

STATE OF VERMONT
AGENCY OF TRANSPORTATION

Town Of	SEARSBURG	Bridge No.	24
		Log Sta.	
Highway No.	VT. RTE. 9	Surv. Sta.	

VT. RTE. 9 OVER BOND BROOK

ABUTMENT I PLAN AND ELEVATION

Designed By M. GOGUEN	Drawn by J. LAGONE/Wm WEATHERBY
Checked By M. OLSTAD Date 2/2002	Bridge Design Supervisor M. OLSTAD Date 2/2002
PROJECT SEARSBURG - WILMINGTON	PROJECT NO. NHF 010-1(18)
I.G.C. Info.	
Bridge Sheet No. BRI09	Sheet 120 OF 435

CLOUGH, HARBOUR & ASSOCIATES LLP
ENGINEERS, SURVEYORS, PLANNERS & LANDSCAPE ARCHITECTS
8 WINNERS CIRCLE ALBANY, NEW YORK, 12205

DATE/TIME = 02/28/02
USER = 22225

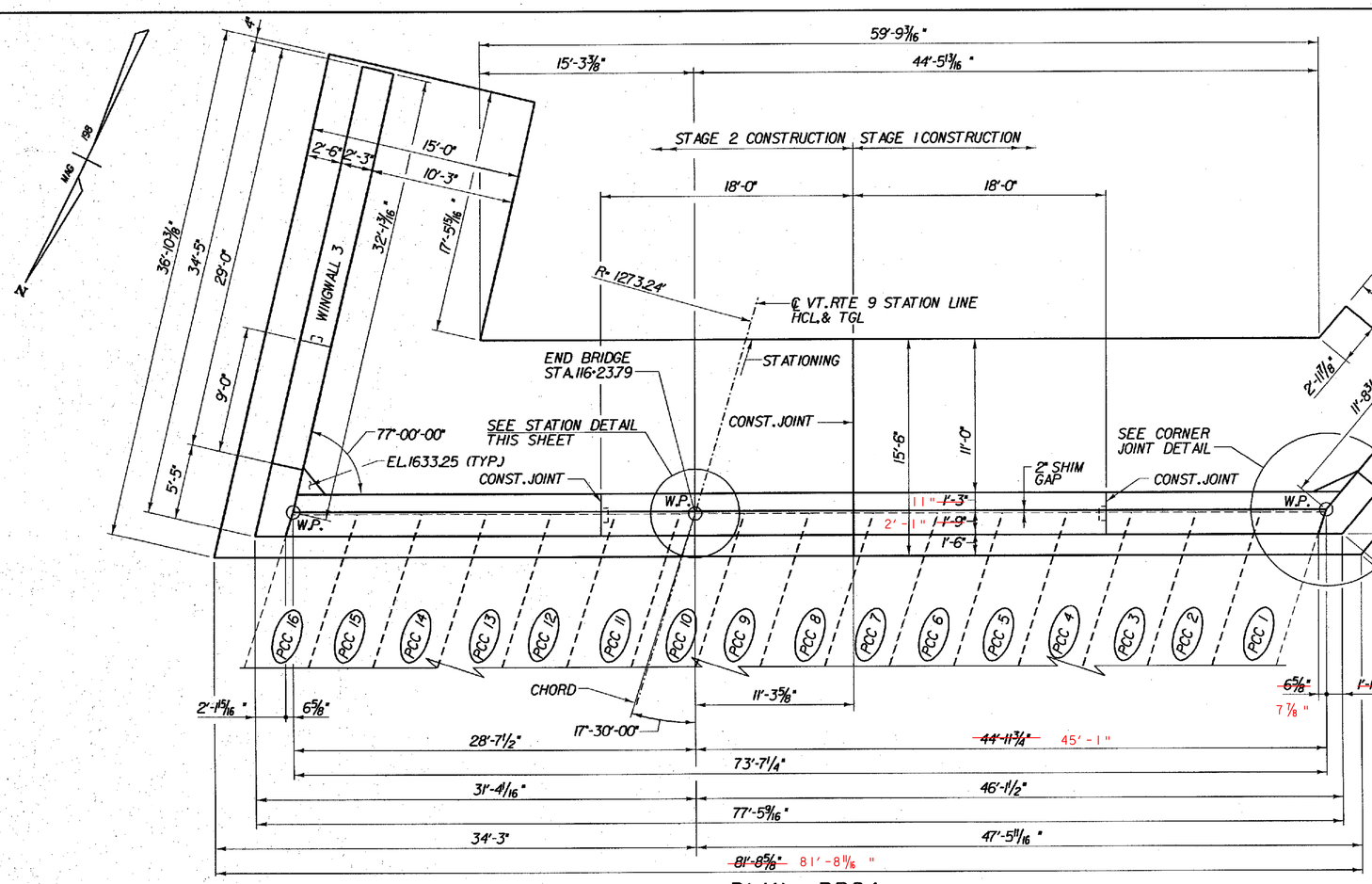

PLAN - BR24

SCALE 1" = 5'-0

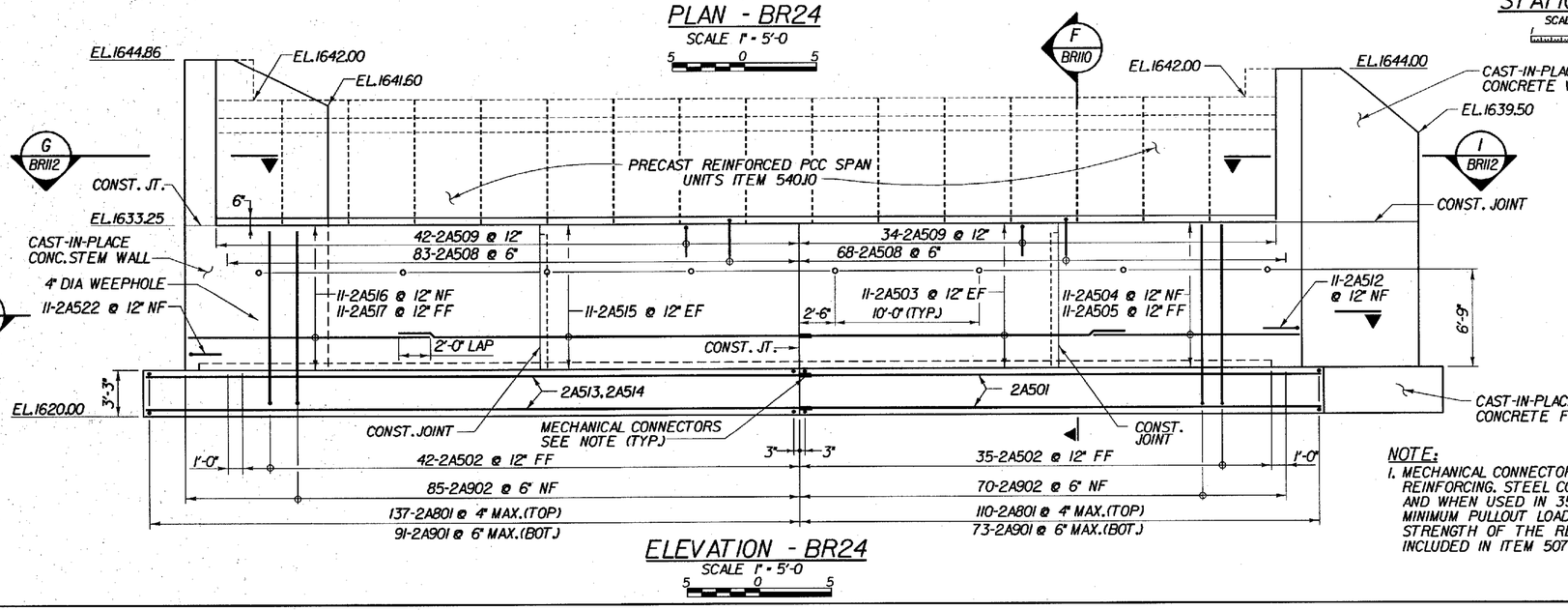

ELEVATION - BR24

SCALE 1" = 5'-0

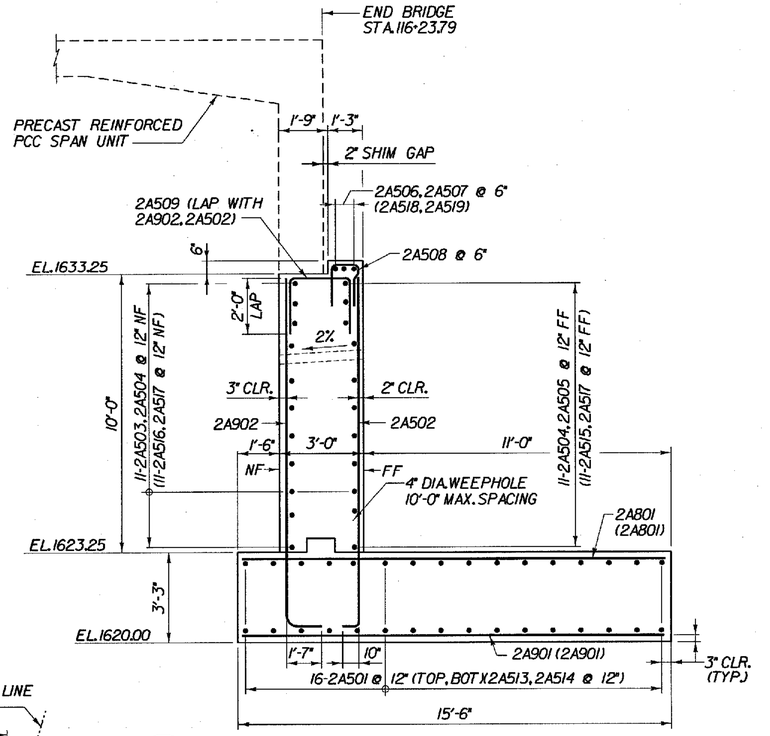

F BRII0

TYPICAL ABUTMENT SECTION - BR24

(STAGE 2 SIMILAR U.O.N.)

SCALE 3/8" = 1'-0

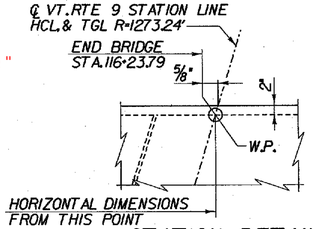

STATION DETAIL

SCALE 3/4" = 1'-0

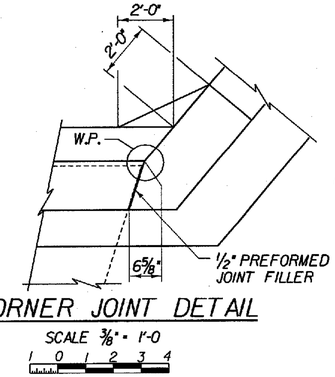

CORNER JOINT DETAIL

SCALE 3/8" = 1'-0

WINGWALL PLACEMENT NOTE:

1. PRECAST REINF. PCC SPAN UNITS SHALL BE IN PLACE BEFORE WINGWALL CONCRETE IS PLACED ABOVE THE ABUTMENT SEAT.

KEY:

NF - NEAR FACE
FF - FAR FACE
EF - EACH FACE
▲ - BARS TO BE CUT IN FIELD
◆ - FIELD BEND
3" CLR. UNLESS OTHERWISE SPECIFIED ON THE PLANS.

NOTE:

1. MECHANICAL CONNECTORS SHALL BE DESIGNED WITH #5 REINFORCING. STEEL CONNECTORS SHALL BE NON-CORROSIVE AND WHEN USED IN 3500 PSI CONCRETE, ABLE TO RESIST MINIMUM PULLOUT LOAD OF 90% OF THE MINIMUM TENSILE STRENGTH OF THE REINFORCING BAR. COST SHALL BE INCLUDED IN ITEM 507.15.

CHA CLOUGH, HARBOUR & ASSOCIATES LLP
ENGINEERS, SURVEYORS, PLANNERS & LANDSCAPE ARCHITECTS
8 WINNERS CIRCLE ALBANY, NEW YORK, 12205

STATE OF VERMONT
AGENCY OF TRANSPORTATION

Town Of	SEARSBURG	Bridge No. 24	
Highway No.	VT. RTE. 9	Log Sta.	
		Surv. Sta.	

VT. RTE.9 OVER BOND BROOK

ABUTMENT 2 PLAN AND ELEVATION

Designed By M. GOGUEN		Drawn by J. LAGONE/Wm WEATHERBY	
Checked By M. OLSTAD	Date 2/2002	Bridge Design Supervisor M. OLSTAD	Date 2/2002
PROJECT SEARSBURG - WILMINGTON		PROJECT NO. NHF 010-1(18)	
I.G.C. Info.			
Bridge Sheet No. BRII0		Sheet 121 OF 435	

DATE/TIME = 02/20/02
USER = 2225

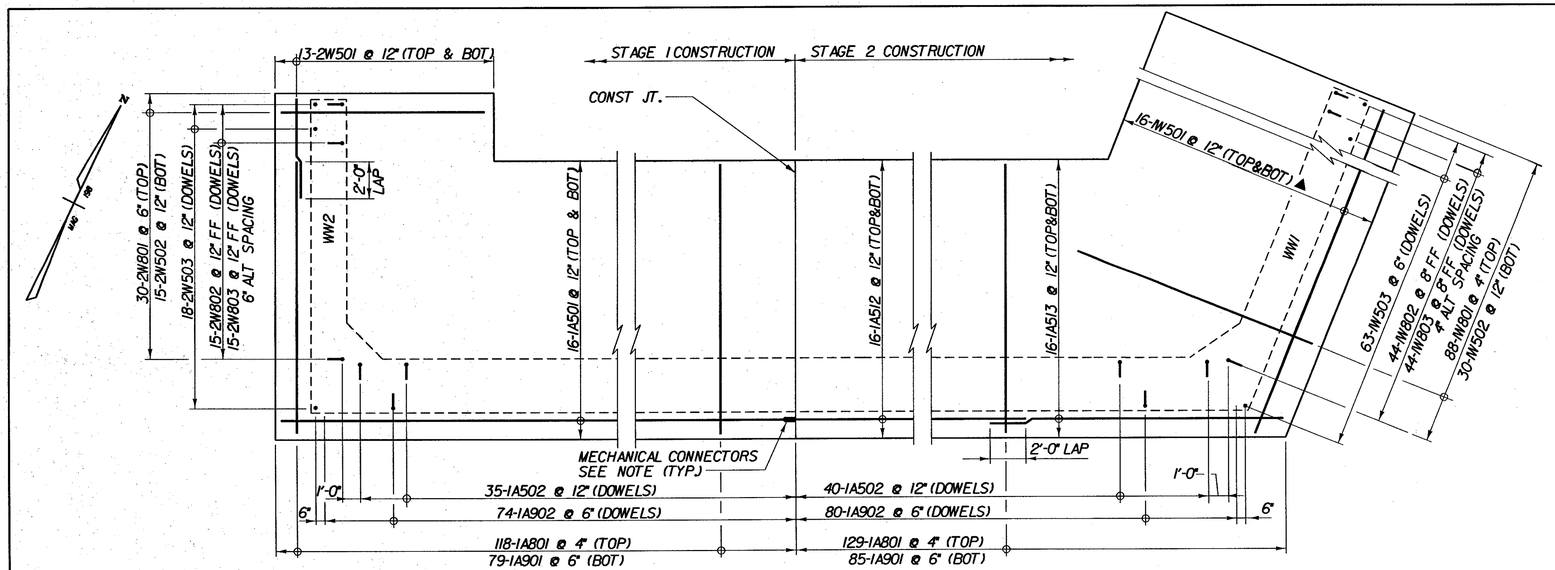

ABUTMENT 1 FOOTING REINFORCING PLAN - BR24

SCALE 1/4" = 1'-0

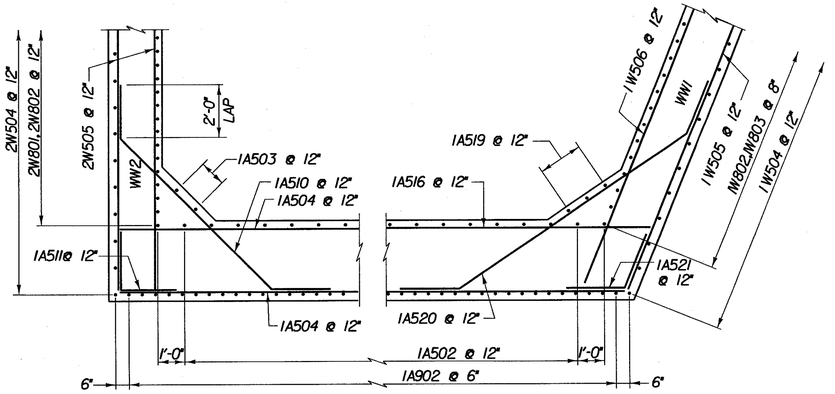

D BR109 — ABUTMENT 1 CORNER AND FILLET DETAILS

SCALE 3/8" = 1'-0

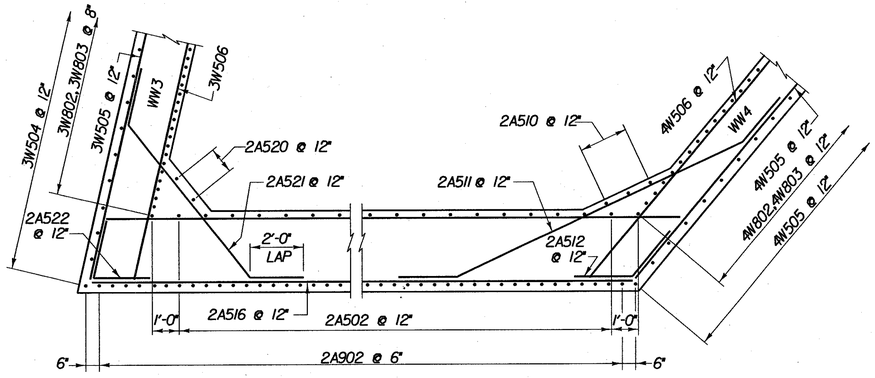

H BRI10 — ABUTMENT 2 CORNER AND FILLET DETAILS

SCALE 3/8" = 1'-0

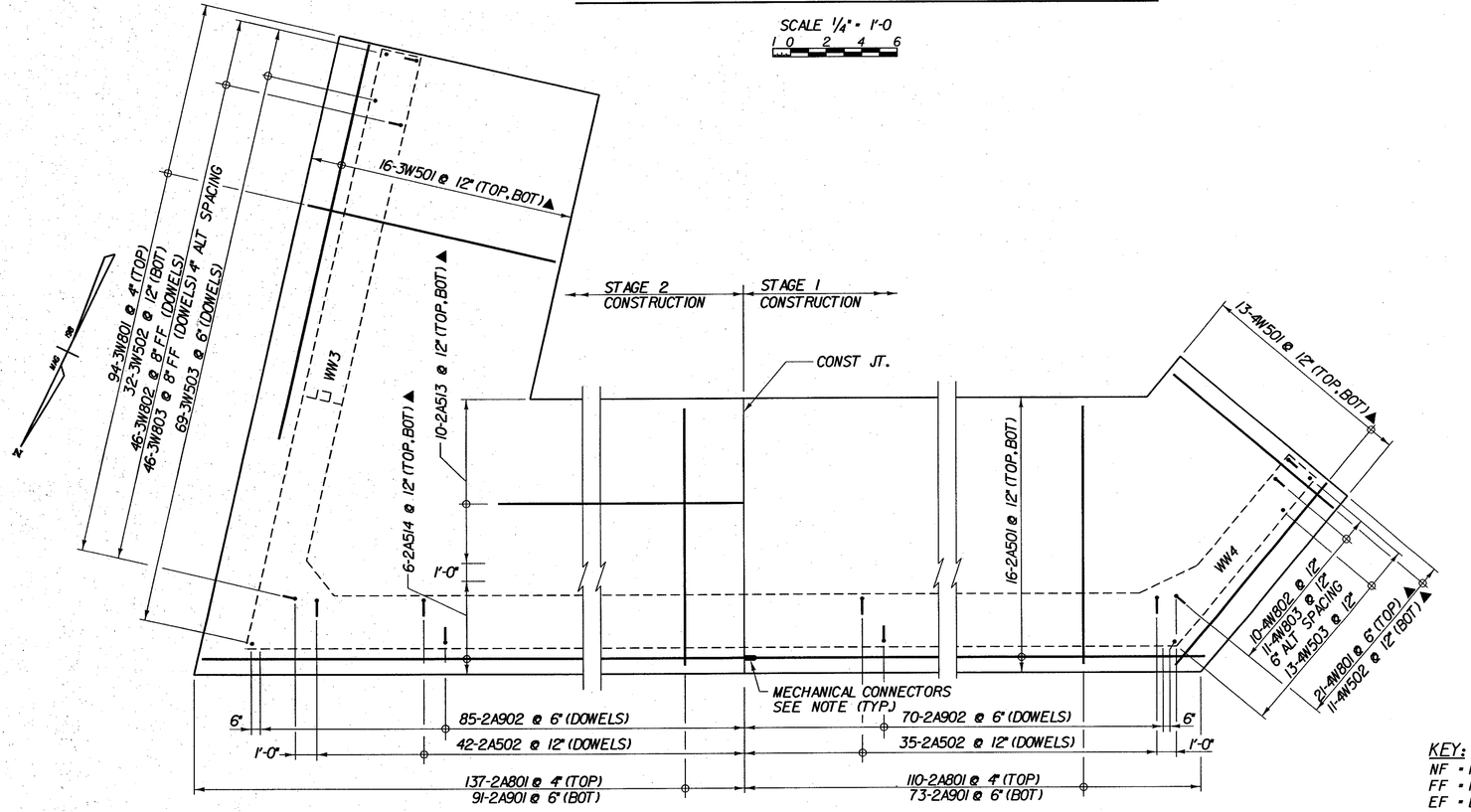

ABUTMENT 2 FOOTING REINFORCING PLAN - BR24

SCALE 1/4" = 1'-0

NOTE:

1. MECHANICAL CONNECTORS SHALL BE DESIGNED WITH #5 REINFORCING. STEEL CONNECTORS SHALL BE NON-CORROSIVE AND WHEN USED IN 3500 PSI CONCRETE, ABLE TO RESIST MINIMUM PULLOUT LOAD OF 90% OF THE MINIMUM TENSILE STRENGTH OF THE REINFORCING BAR. COST SHALL BE INCLUDED IN ITEM 507.15.

KEY:

NF - NEAR FACE
FF - FAR FACE
EF - EACH FACE
▲ - CUT TO FIT IN FIELD
◆ - FIELD BEND
3" CLR. UNLESS OTHERWISE SPECIFIED ON THE PLANS.

STATE OF VERMONT
AGENCY OF TRANSPORTATION

Town Of	SEARSBURG	Bridge No.	24
Highway No.	VT. RTE. 9	Log Sta.	
		Surv. Sta.	

VT. RTE. 9 OVER BOND BROOK

FOOTING REINFORCING PLANS

Designed By	M. GOGUEN	Drawn by	J. LAGONE
Checked By	M. OLSTAD Date 2/2002	Bridge Design Supervisor	M. OLSTAD Date 2/2002
PROJECT	SEARSBURG - WILMINGTON	PROJECT NO.	NHF 010-1(18)
I.G.C. Info.			
Bridge Sheet No.	BRIII	Sheet	122 OF 435

CHA CLOUGH, HARBOUR & ASSOCIATES LLP
ENGINEERS, SURVEYORS, PLANNERS & LANDSCAPE ARCHITECTS
11 WINNERS CIRCLE ALBANY, NEW YORK, 12205

FILE NAME = u:\9795\MSTN\15\br-dg24\24_footgs.DGN
DATE/TIME = 02/28/02
USER = 2225

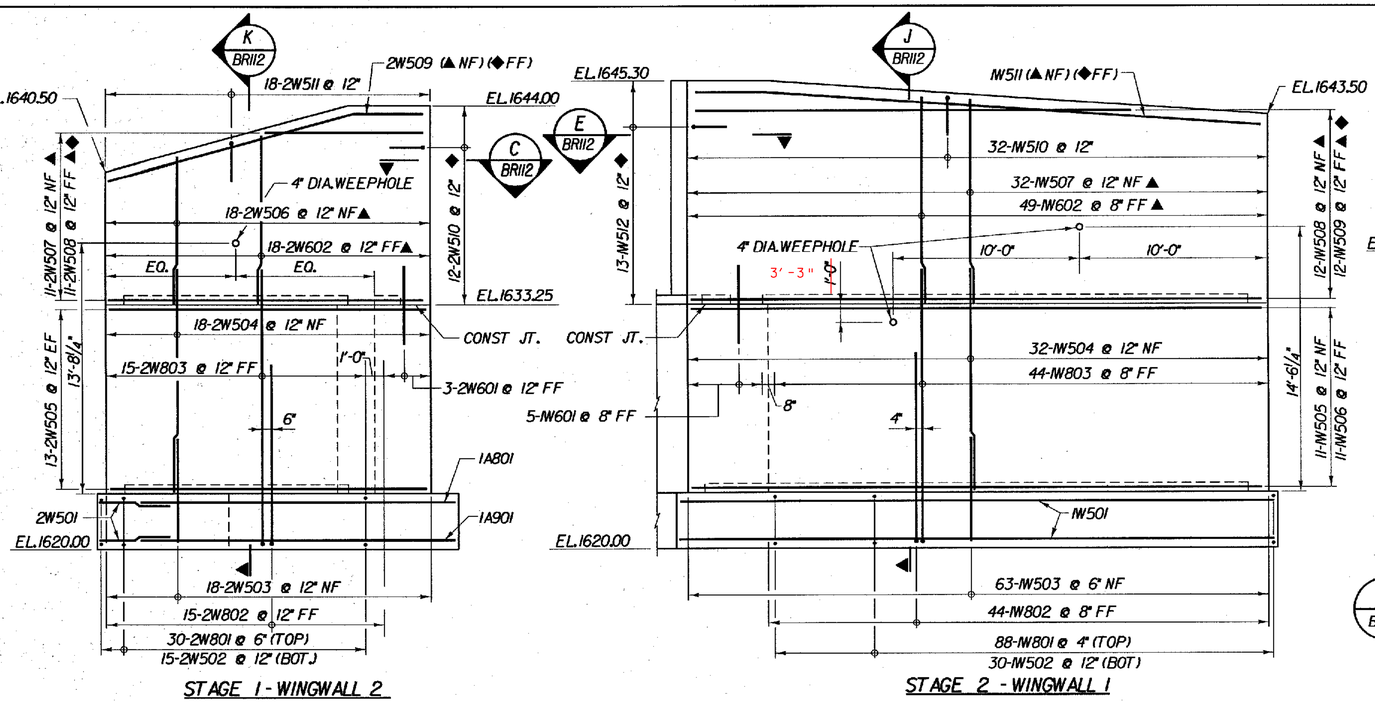

ABUTMENT 1 WINGWALL REINFORCING ELEVATIONS - BR24

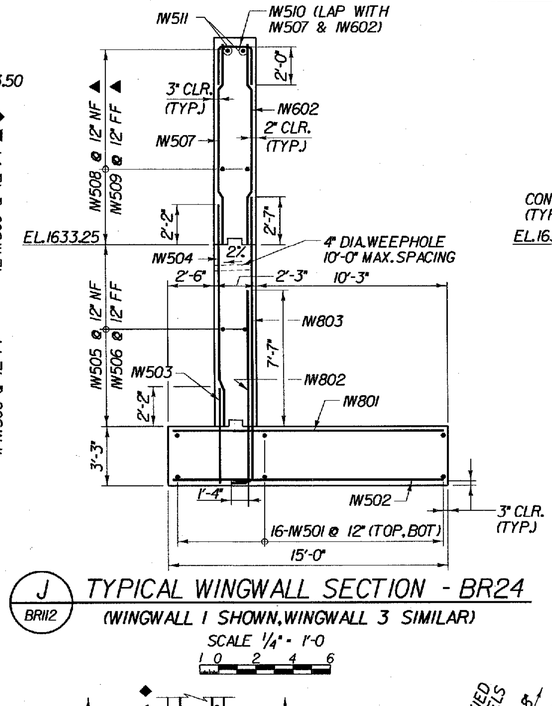

J BRII2 TYPICAL WINGWALL SECTION - BR24

(WINGWALL 1 SHOWN, WINGWALL 3 SIMILAR)

SCALE 1/4" = 1'-0

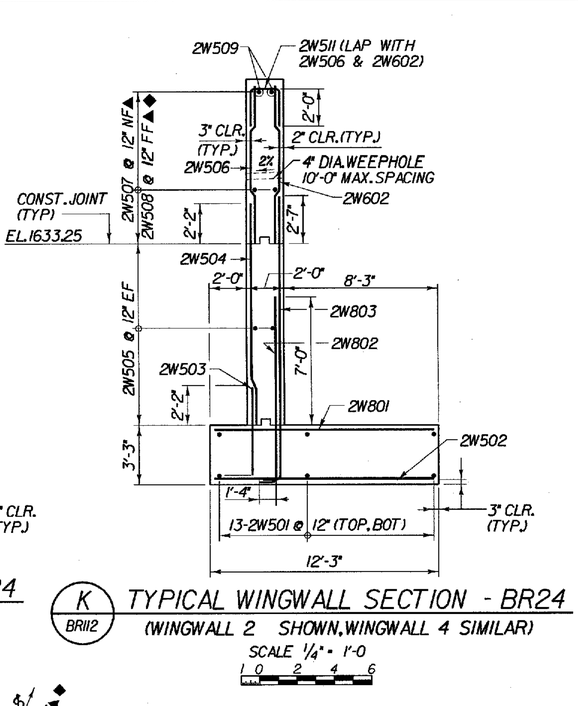

K BRII2 TYPICAL WINGWALL SECTION - BR24

(WINGWALL 2 SHOWN, WINGWALL 4 SIMILAR)

SCALE 1/4" = 1'-0

STAGE 1 - WINGWALL 2

STAGE 2 - WINGWALL 1

ABUTMENT 2 WINGWALL REINFORCING ELEVATIONS - BR24

SCALE 1/4" = 1'-0

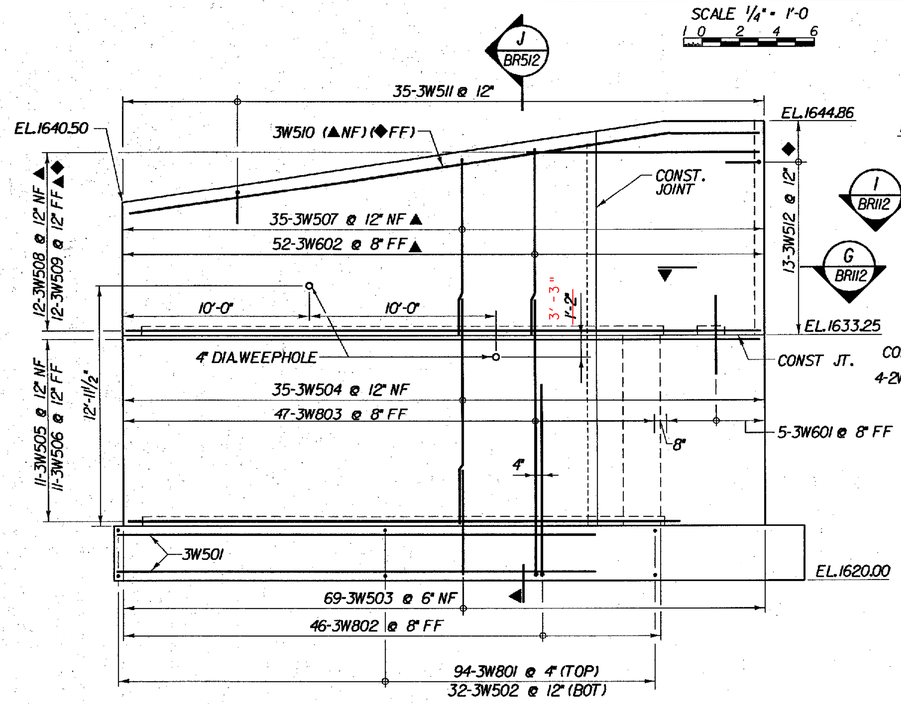

ABUTMENT 2 WINGWALL REINFORCING ELEVATIONS - BR24

SCALE 1/4" = 1'-0

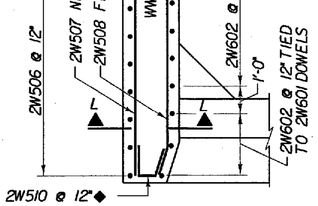

C BRI09 C BRII2 SECTION AT WW2

SCALE 3/8" = 1'-0

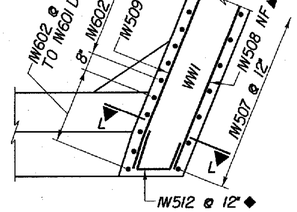

E BRI09 E BRII2 SECTION AT WWI

SCALE 3/8" = 1'-0

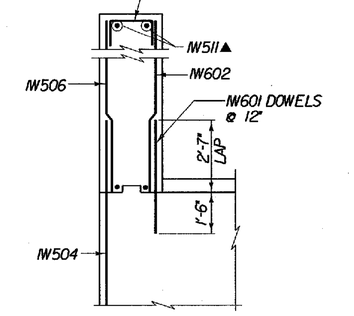

L BRII2 CONNECTION DETAIL

(WWI SHOWN, WW2,3,4 SIMILAR)

SCALE 3/8" = 1'-0

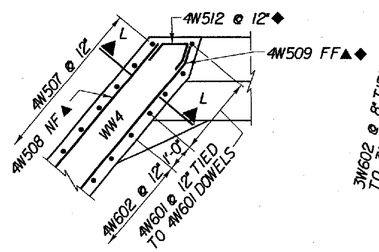

I BRII0 I BRII2 SECTION AT WW4

SCALE 3/8" = 1'-0

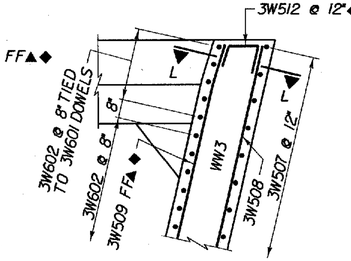

G BRII0 G BRII2 SECTION AT WW3

SCALE 3/8" = 1'-0

KEY:

NF - NEAR FACE
FF - FAR FACE
EF - EACH FACE
▲ - BARS TO BE CUT IN FIELD
◆ - FIELD BEND
3" CLR. UNLESS OTHERWISE SPECIFIED ON THE PLANS.

CLOUGH, HARBOUR & ASSOCIATES LLP
ENGINEERS, SURVEYORS, PLANNERS & LANDSCAPE ARCHITECTS
18 WINNERS CIRCLE ALBANY, NEW YORK, 12205

STATE OF VERMONT
AGENCY OF TRANSPORTATION

Town Of SEARSBURG	Bridge No. 24
Highway No. VT. RTE. 9	Log Sta. / Surv. Sta.
VT. RTE.9 OVER BOND BROOK	
WINGWALL REINFORCING DETAILS	
Designed By M. GOGUEN	Drawn by J. LAGONE/ K. DETRICK
Checked By M. OLSTAD Date 2/2002	Bridge Design Supervisor M. OLSTAD Date 2/2002
PROJECT SEARSBURG - WILMINGTON	PROJECT NO. NHF 010-1(18)
I.G.C. Info.	
Bridge Sheet No. BRII2	Sheet 123 OF 435

DATE/TIME = 02/28/02
USER = 2225

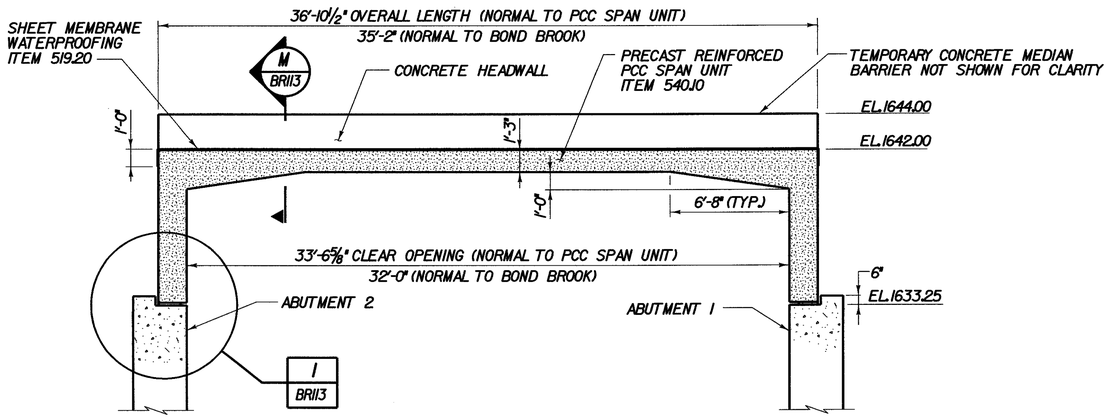

N BRII3 WEST HEADWALL & PCC SPAN UNIT

SCALE 1/4" = 1'-0

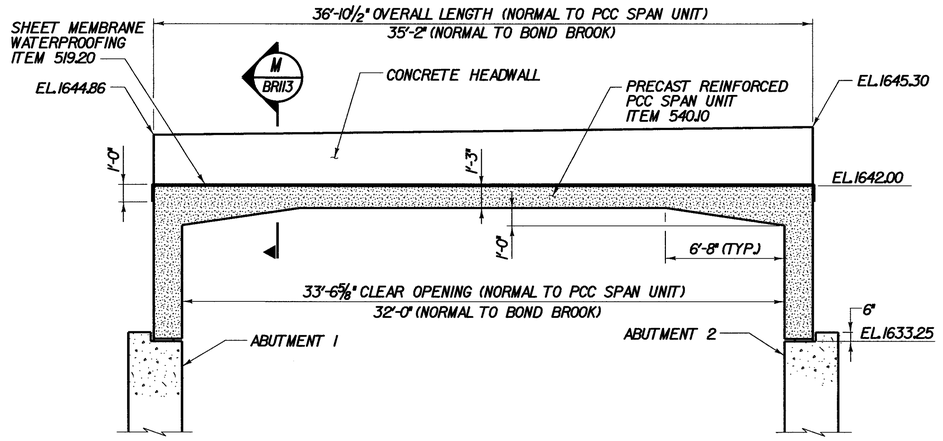

EAST HEADWALL & PCC SPAN UNIT

(LOOKING EAST)

SCALE 1/4" = 1'-0

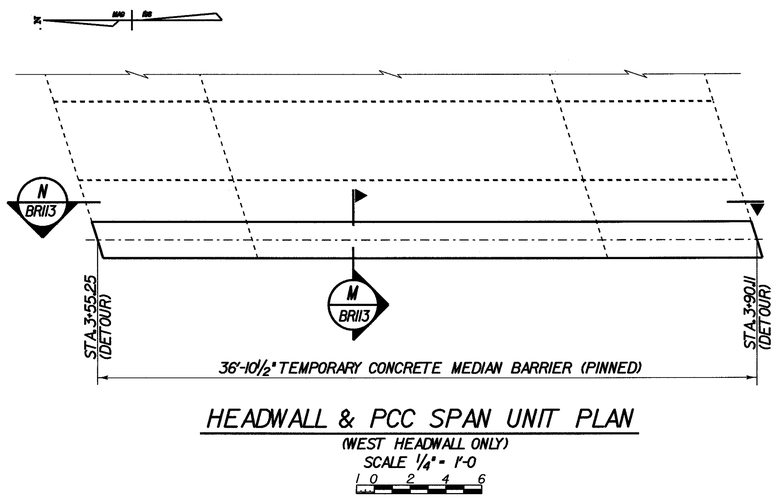

HEADWALL & PCC SPAN UNIT PLAN

(WEST HEADWALL ONLY)

SCALE 1/4" = 1'-0

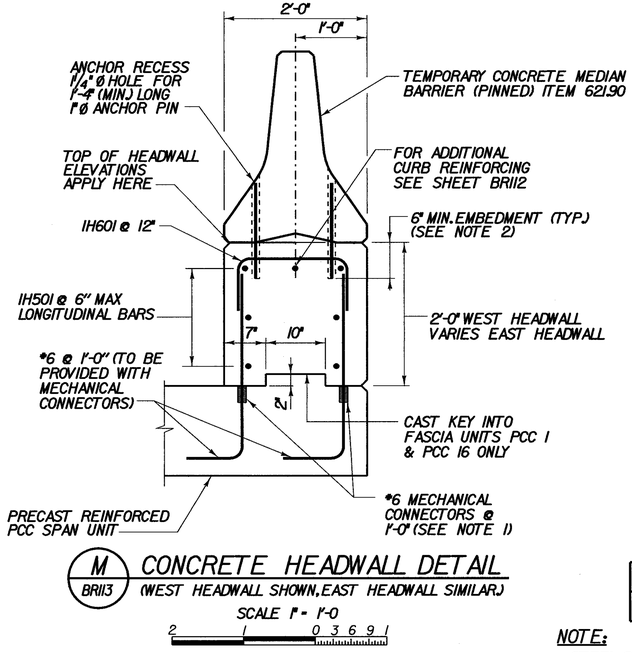

M BRII3 CONCRETE HEADWALL DETAIL

(WEST HEADWALL SHOWN, EAST HEADWALL SIMILAR)

SCALE 1" = 1'-0

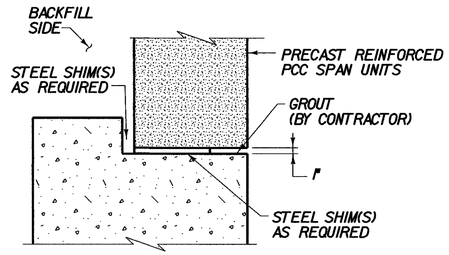

1 BRII3 TYPICAL KEY DETAIL

SCALE 1" = 1'-0

NOTE:

STEEL SHIMS AND GROUT SHALL BE AS REQUIRED BY THE PRECAST MANUFACTURER. COST TO BE SUBSIDIARY TO PCC ITEM #540J0

NOTE:

1. MECHANICAL CONNECTORS SHALL BE CAST INTO THE PRECAST UNITS AND BE DESIGNED WITH #6 REINFORCING. STEEL CONNECTORS SHALL BE NON-CORROSIVE AND WHEN USED IN 3500 PSI CONCRETE, ABLE TO RESIST MINIMUM PULLOUT LOAD OF 90% OF THE MINIMUM TENSILE STRENGTH OF THE REINFORCING BAR. COST SHALL BE INCLUDED IN PRECAST REINFORCED PCC SPAN UNIT ITEM 507.15.

2. TEMPORARY MEDIAN BARRIER SHALL BE PINNED AT ALTERNATING 2'-0" CENTERS EITHER BY MECHANICAL ANCHORS OR DRILL AND GROUT REINFORCEMENT. AFTER REMOVAL OF THE BARRIER, THE HOLES IN THE SURFACE USED TO ANCHOR THE BARRIER SHALL BE FILLED WITH A NON-SHRINK GROUT. COST OF ALL WORK ASSOCIATED WITH PINNING THE BARRIER SHALL BE SUBSIDIARY TO ITEM 621.90.

STATE OF VERMONT
AGENCY OF TRANSPORTATION

Town Of	SEARSBURG	Bridge No.	24
		Log Sta.	
Highway No.	VT. RTE. 9	Surv. Sta.	

VT. RTE.9 OVER BOND BROOK

PRECAST PCC SPAN UNIT AND HEADWALL DETAILS

Designed By M. GOGUEN	Drawn by K.DETRICK/Wm WEATHERBY
Checked By M. OLSTAD Date 2/2002	Bridge Design Supervisor M. OLSTAD Date 2/2002
PROJECT SEARSBURG - WILMINGTON	PROJECT NO. NHF 010-1(18)
I.G.C. Info.	
Bridge Sheet No. BRII3	Sheet 124 OF 435

CHA CLOUGH, HARBOUR & ASSOCIATES LLP
ENGINEERS, SURVEYORS, PLANNERS & LANDSCAPE ARCHITECTS
11 WINNERS CIRCLE ALBANY, NEW YORK, 12205

FILE NAME = N:\78d0951\Structures\Consultant 022002\15\brdg24\24_precastdet.DGN
DATE/TIME = 26-FEB-2002
USER = RWhitcomb

ITEM	NO. PIECES	SIZE	LENGTH	MARK	TYPE	A	B	C	D	E	F	G	H	J	K	R	O
1	STAGE 1 - ABUTMENT 1																
2																	
3	32	5	38'-11	1A501	STR												
4	35	5	13'-5	1A502	2	0'-10	12'-7										
5	4	5	9'-10	1A503 △	STR												
6	22	5	15'-0	1A504	STR												
7	22	5	23'-11	1A505	STR												
8	3	5	15'-0	1A506	STR												
9	3	5	22'-0	1A507	STR												
10	71	5	4'-9	1A508	S10		2'-0	0'-9	2'-0								
11	36	5	6'-7	1A509	S10		2'-0	2'-7	2'-0								
12	11	5	12'-8	1A510	22		2'-0	8'-8	2'-0	1'-5	1'-5		1'-5		1'-5		11'-6
13	11	5	4'-0	1A511	17		2'-0	2'-2									
14	119	8	15'-0	1A801 △	STR												
15	79	9	15'-0	1A901	STR												
16	74	9	14'-2	1A902	17		1'-7	12'-7									
17																	
18																	
19																	
20	STAGE 1 - WINGWALL 2																
21	26	5	5'-9	2W501	STR												
22	15	5	11'-9	2W502	STR												
23	20	5	5'-2	2W503 △	STR												
24	18	5	12'-2	2W504	STR												
25	26	5	16'-11	2W505	STR												
26	18	5	10'-6	2W506 ▲	STR												
27	11	5	16'-11	2W507 ▲	STR												
28	11	5	16'-11	2W508 ▲◆	STR												
29	2	5	17'-5	2W509 ▲◆	22		13'-3	4'-2		3'-6	12'-9						
30	12	5	3'-4¾	2W510 ◆	28		2'-0	1'-5½	2'-0	2'-0			1'-1½		0'-4½		
31	18	5	5'-7	2W511	17		2'-0	1'-7	2'-0								
32	5	6	5'-2	2W601 △	STR												
33	18	6	10'-6	2W602 ▲	STR												
34	30	8	11'-9	2W801	STR												
35	15	8	11'-4	2W802	17		1'-4	10'-0									
36	15	8	16'-11	2W803	17		1'-4	15'-7									
37																	
38																	
39																	
40	STAGE 1 - ABUTMENT 2																
41	32	5	36'-0	2A501	STR												
42	35	5	13'-5¼	2A502	2	0'-10	12'-7¼										
43	22	5	20'-0	2A503	STR												
44	11	5	16'-6	2A504	STR												
46	11	5	18'-10	2A505	STR												
46	3	5	20'-0	2A506	STR												
47	3	5	15'-5	2A507 ▲	STR												
48	68	5	4'-9	2A508	S10		2'-0	0'-9	2'-0								
49	34	5	6'-7	2A509	S10		2'-0	2'-7	2'-0								
50	5	5	9'-10	2A510 △	STR												
51	11	5	~~15'-3~~	2A511 17'-3"	22		2'-0	13'-3	2'-0	0'-10	1'-10		0'-10¼		1'-9¾		16'-10¾
52	11	5	4'-0	2A512	22		2'-0	2'-0		1'-6⅜	1'-3½						
53	110	8	15'-0	2A801	STR												
54	75	9	15'-0	2A901 △	STR												
55	70	9	14'-2	2A902	17		1'-7	12'-7									
56																	
57																	
58	STAGE 1 - WINGWALL 4																
59	26	5	12'-4½	4W501 ▲	STR												
60	11	5	11'-9	4W502	STR												
61	15	5	4'-10	4W503 △	STR												
62	13	5	12'-7	4W504	STR												
63	22	5	11'-9¼	4W505	STR												
64	13	5	13'-5½	4W506	STR												
65	11	5	10'-6	4W507 ▲	STR												
66	11	5	11'-9¼	4W508 ▲	STR												
67	2	5	14'-2¾	4W509 ▲◆	22		5'-1	9'-1¾		4'-6	8'-3						
68	12	5	5'-5	4W510 ◆	28		2'-0	1'-5	2'-0	1'-6⅜	1'-3⅜		1'-9⅛		11¼		
69	13	5	5'-7	4W511	17		2'-0	1'-7	2'-0								
70	6	6	5'-2	4W601 △	STR	0'-8	5'-2					0'-8		0'-6			
71	13	6	10'-6	4W602 ▲	STR												
72	21	8	11'-9	4W801	STR												
73	10	8	11'-4	4W802	17		1'-4	10-0									
74	11	8	16'-11	4W803	17		1'-4	15'-7									
75																	
76																	
77																	
78	STAGE 1 HEADWALL (WEST)																
79	10	5	36'-4	1H501 △	STR												
80	40	6	3'-6	1H601 △	S10		1'-0	1'-6	1'-0								
81																	
82																	
83																	
84																	
85																	
86																	
87																	
88																	
89																	
90																	
91																	
92																	
93																	
94																	
95																	
96																	
97																	

ITEM	NO. PIECES	SIZE	LENGTH	MARK	TYPE	A	B	C	D	E	F	G	H	J	K	R	O
98	STAGE 2 - ABUTMENT 1																
99	40	5	13'-5	1A502	2	0'-10	12'-7										
100	82	5	4'-9	1A508 △	S10		2'-0	0'-9	2'-0								
101	40	5	4'-7	1A509	S10		2'-0	2'-7	2'-0								
102	32	5	29'-1	1A512	STR												
103	32	5	15'-5	1A513	STR												
104	22	5	25'-0	1A514	STR												
105	11	5	17'-0	1A515	STR												
106	11	5	18'-0	1A516	STR												
107	3	5	25'-0	1A517	STR												
108	3	5	15'-4	1A518	STR												
109	3	5	9'-10	1A519	STR												
110	11	5	14'-8	1A520	22		2'-0	10'-8	2'-0	1'-1½	1'-8		1'-1½		1'-8		14'-0
111	11	5	4'-0	1A521	22		2'-0	2'-0		1'-10	0'-9¾						
112	131	8	15'-0	1A801 △	STR												
113	85	9	15'-0	1A901	STR												
114	80	9	14'-2	1A902	17		1'-7	12'-7									
115																	
116																	
117																	
118	STAGE 2 - WINGWALL 1																
119	32	5	31'-7	1W501	STR												
120	30	5	14'-6	1W502	STR												
121	63	5	5'-2	1W503	STR												
122	32	5	12'-0	1W504	STR												
123	11	5	30'-7	1W505	STR												
124	11	5	31'-5	1W506	STR												
125	32	5	11'-9½	1W507	STR												
126	12	5	30'-7	1W508	STR												
127	12	5	31'-5	1W509	STR												
128	32	5	5'-10	1W510	17		2'-0	1'-10	2'-0								
129	2	5	31'-2	1W511 ▲◆	22		3'-11	27'-3		0'-3	26'-11¼						30'-11⅝
130	13	5	5'-8½	1W512	28		2'-0	1'-8½	2'-0	1'-10½	0'-8½		1'-10½		0'-9		
131	7	6	4'-1	1W601 △	STR												
132	49	6	11'-9½	1W602 ▲	STR												
133	90	8	14'-6	1W801 △	STR												
134	44	8	11'-11	1W802	17		1'-4	10'-7									
135	44	8	16'-11	1W803	17		1'-4	15'-7									
136																	
137																	
138	STAGE 2 - ABUTMENT 2																
139	42	5	13'-5	2A502	2	0'-10	12'-7										
140	83	5	4'-9	2A508	S10		2'-0	0'-9	2'-0								
141	42	5	6'-7	2A509	S10		2'-0	2'-7	2'-0								
142	20	5	31'-10	2A513	STR												
143	12	5	45'-2½	2A514 ▲	STR												
144	22	5	20'-0	2A515	STR												
145	11	5	24'-5	2A516	STR												
146	11	5	23'-10	2A517	STR												
147	3	5	20'-0	2A518	STR												
148	3	5	24'-5	2A519	STR												
149	4	5	9'-10	2A520 △	STR												
150	11	5	12'-2	2A521	22		2'-0	8'-2	2'-0	1'-7	1'-2¾		1'-6⅝		1'-3		10'-7¾
151	11	5	4'-0	2A522	17		2'-0	2'-0							0-5⅜	1'-11⅜	
152	139	8	15'-0	2A801 △	STR												
153	91	9	15'-0	2A901	STR												
154	85	9	14'-2	2A902	17		1'-7	12'-7									
155																	
156																	
157																	
158	STAGE 2 - WINGWALL 3																
159	32	5	23'-0	3W501 ▲	STR												
160	32	5	14'-6	3W502	STR												
161	71	5	5'-2	3W503 △	STR												
162	35	5	12'-7	3W504	STR												
163	11	5	33'-11	3W505	STR												
164	11	5	33'-5	3W506	STR												
165	35	5	11'-4	3W507 ▲	STR												
166	12	5	33'-11	3W508 ▲	STR												
167	12	5	33'-5	3W509 ▲◆	STR												
168	2	5	34'-3	3W510 ▲◆	22		5'-2	29'-1		0'-9	5'-1⅜						
169	35	5	5'-10	3W511	17		2'-0	1'-10	2'-0								
170	13	5	5'-8	3W512 ◆	28		2'-0	1'-7¾	2'-0	1'-10	0'-7		1'-10		0'-9		
171	7	6	4'-1	3W601 △	STR												
172	52	6	11'-4	3W602 ▲	STR												
173	94	8	14'-6	3W801	STR												
174	46	8	11'-11	3W802	17		1'-4	10'-7									
175	47	8	16'-11	3W803	17		1'-4	15'-7									
176																	
177																	
178	STAGE 2 HEADWALL (EAST)																
179	16	5	36'-4	2H501 △	STR												
180	40	6	3'-6	2H601 △	S10		1'-0	1'-6	1'-0								
181																	
182																	
183																	
184																	
185																	
186																	
187																	
1188																	
189																	
190																	
191																	
192																	
193																	
194																	

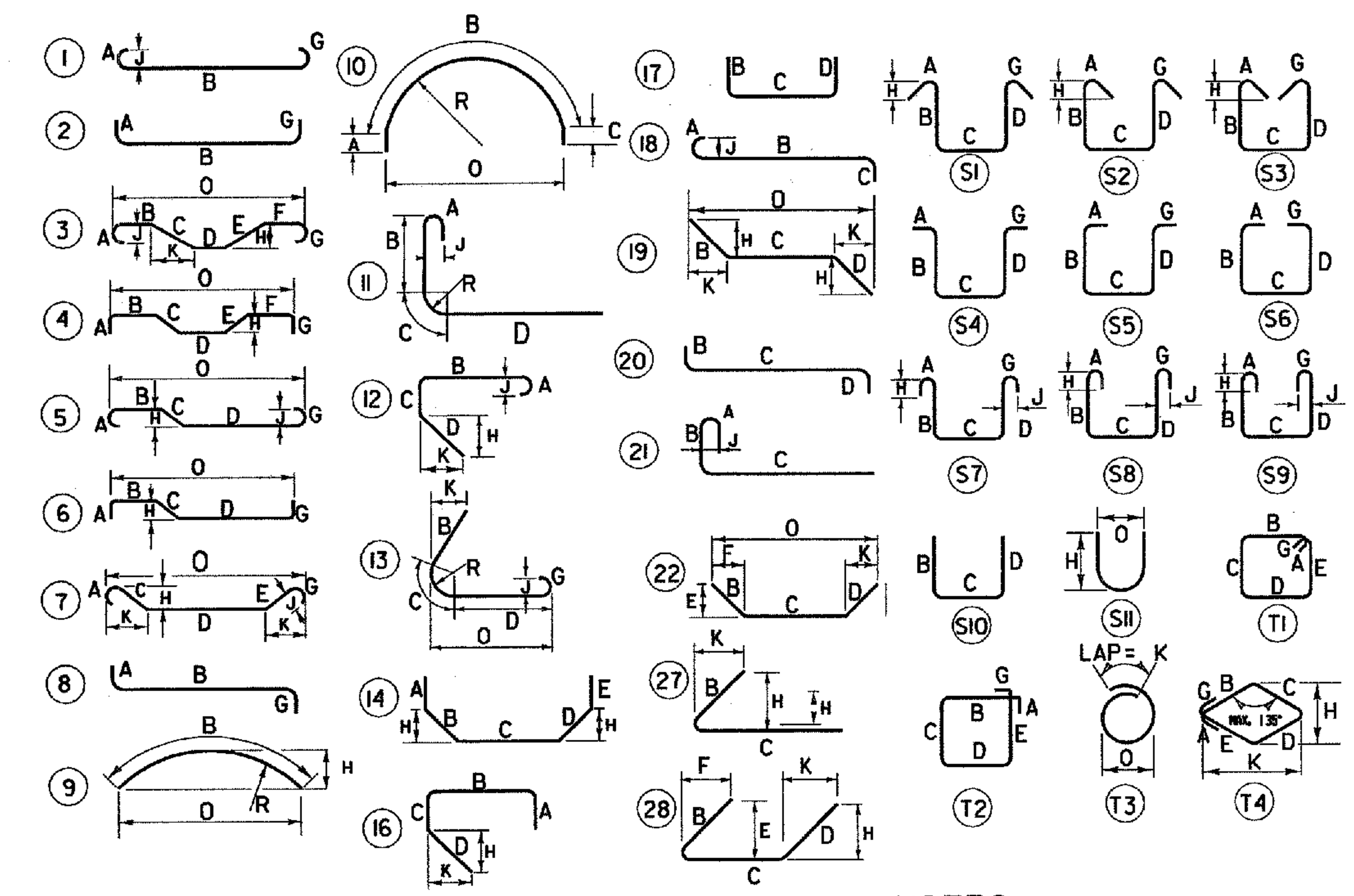

ASTM STANDARD REINFORCING BARS				
BAR SIZE DESIG-NATION	WEIGHT POUNDS PER FOOT	NOMINAL DIMENSIONS ROUND SECTION		
		DIAMETER INCHES	CROSS SEC-TIONAL AREA SQ. INCHES	PERIMETER INCHES
#3	.376	.375	.11	1.178
#4	.668	.500	.20	1.571
#5	1.043	.625	.31	1.963
#6	1.502	.750	.44	2.356
#7	2.044	.875	.60	2.749
#8	2.670	1.000	.79	3.142
#9	3.400	1.128	1.00	3.544
#10	4.303	1.270	1.27	3.990
#11	5.313	1.410	1.56	4.430
#14	7.65	1.693	2.25	5.32
#18	13.60	2.257	4.00	7.09

NOTES:

1. UNLESS OTHERWISE DESIGNATED, ALL BAR REINFORCEMENT FOR CONCRETE IN SIZES UP TO AND INCLUDING NO. 18 SHALL CONFORM TO THE REQUIREMENTS OF THE "SPECIFICATIONS FOR DEFORMED BILLET-STEEL BARS FOR CONCRETE REINFORCEMENT", AASHTO M 31(ASTM A 615-SI). ALL BARS SHALL BE GRADE 60, UNLESS OTHERWISE DESIGNATED.
2. FOR TYPICAL BENDING DETAILS, RECOMMENDED PIN DIAMETER "D" OF BENDS AND HOOKS, AND OTHER STANDARD PRACTICE, SEE CURRENT CONCRETE REINFORCING STEEL INSTITUTE "MANUAL OF STANDARD PRACTICE".
3. BARS WHICH REQUIRE MORE ACCURATE BENDING THAN STANDARD PRACTICES SHOULD HAVE LIMITS INDICATED.
4. ALL DIMENSIONS ARE OUT TO OUT OF BAR EXCEPT "A" AND "G" ON STANDARD 180 DEGREE AND 135 DEGREE HOOKS.
5. "J" DIMENSION ON 180 DEGREE HOOKS TO BE SHOWN ONLY WHERE NECESSARY TO RESTRICT HOOK SIZE. OTHERWISE, STANDARD HOOKS ARE TO BE USED.
6. "H" DIMENSION ON STIRRUPS TO BE SHOWN ONLY WHEN NECESSARY TO MAINTAIN CLEARANCES.
7. WHERE SLOPE DIFFERS FROM 45 DEGREES, DIMENSIONS "H" AND "K" MUST BE SHOWN.
8. ▲ DENOTES BARS TO BE CUT IN FIELD.
9. ◆ DENOTES BARS TO BE BENT IN FIELD.
10. ✳ DENOTES ONE EXTRA BAR ADDED FOR TESTING PURPOSES.
11. △ DENOTES TWO EXTRA BARS ADDED FOR TESTING PURPOSES.
12. "E" IN PREFIX DENOTES EPOXY COATED REINFORCING STEEL.

CLOUGH, HARBOUR & ASSOCIATES LLP
ENGINEERS, SURVEYORS, PLANNERS & LANDSCAPE ARCHITECTS
III WINNERS CIRCLE ALBANY, NEW YORK, 12205

STATE OF VERMONT
AGENCY OF TRANSPORTATION

Town Of SEARSBURG | Bridge No. 24
Log Sta.
Highway No. VT. RTE. 9 | Surv. Sta.

VT. RTE. 9 OVER BOND BROOK

RIENFORCING STEEL SCHEDULE - BR 24

Designed By M. GOGUEN | Drawn by J. LAGONE/Wm. WEATHERBY
Checked By M. OLSTAD Date 12/2001 | Bridge Design Supervisor M. OLSTAD Date 12/2001
PROJECT SEARSBURG - WILMINGTON | PROJECT NO. NHF 010-1(18)
I.G.C. Info.
Bridge Sheet No. BR114 | Sheet 125 OF 435

FILE NAME =u:\9755\MSTN\15\brdg24\24_barlist.plt
DATE/TIME =12/18/01
USER =564

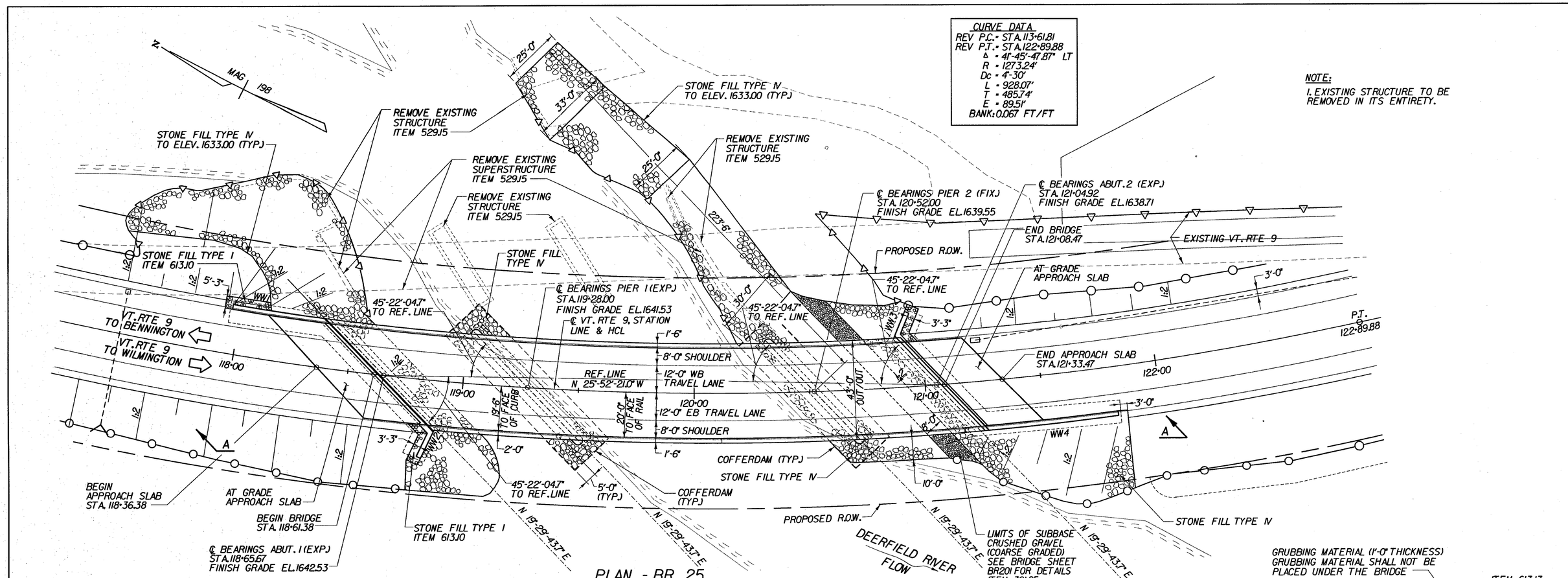

STATE OF VERMONT
AGENCY OF TRANSPORTATION

Town Of SEARSBURG		Bridge No. 25
Highway No. VT. RTE. 9		Log Sta.
		Surv. Sta.
VT. RTE. 9 OVER DEERFIELD RIVER		
PLAN AND ELEVATION - BR 25		
Designed By D. VIENI	Drawn by K. DETRICK	
Checked By M. OLSTAD Date 2/2002	Bridge Design Supervisor M. OLSTAD Date 2/2002	
PROJECT SEARSBURG - WILMINGTON	PROJECT NO. NHF 010-1(18)	
I.G.C. Info.		
Bridge Sheet No. BR200	Sheet 126 OF 435	

CHA CLOUGH, HARBOUR & ASSOCIATES LLP
ENGINEERS, SURVEYORS, PLANNERS & LANDSCAPE ARCHITECTS
11 WINNERS CIRCLE ALBANY, NEW YORK, 12205

FILE NAME = u:\1755\NSTN\15BR0025\25_pln_ele.DGN
DATE/TIME = 02/20/02
USER = 2225

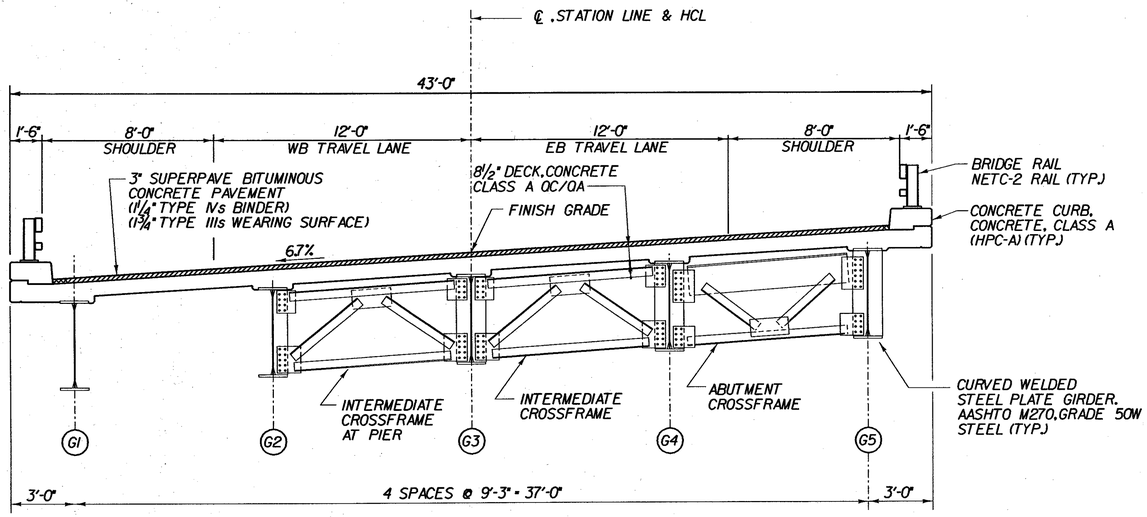

TYPICAL BRIDGE SECTION - BR 25

(NOT TO SCALE)

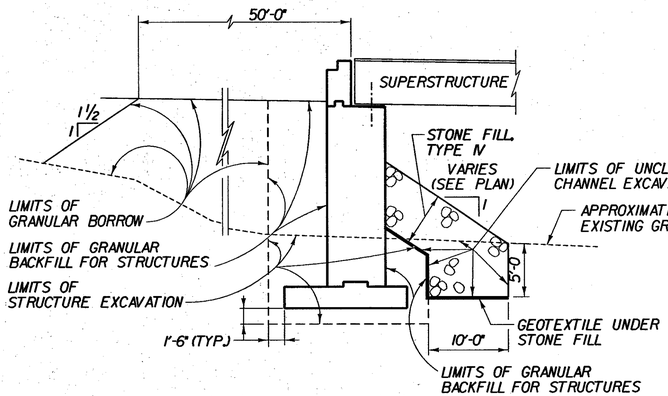

TYPICAL ABUTMENT SECTION - BR 25

(NOT TO SCALE)

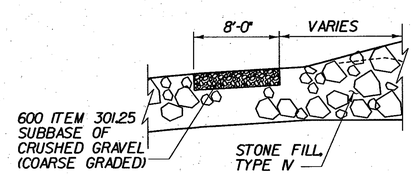

EARTHWORK DETAIL - ABUTMENT 2

(NOT TO SCALE)

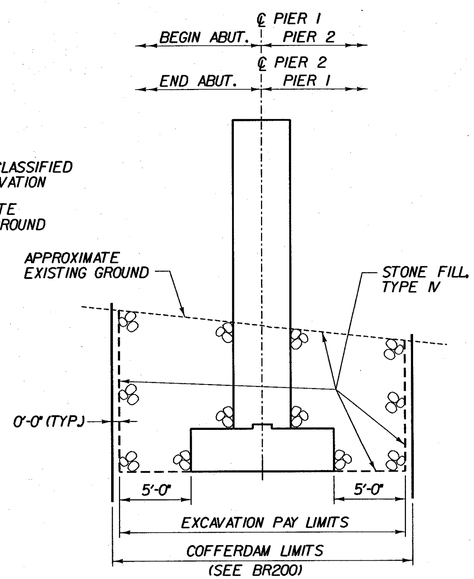

TYPICAL PIER SECTION - BR 25

(NOT TO SCALE)

NOTE:

COFFERDAM SIZE TO BE DETERMINED BY THE CONTRACTOR.

THE PAY LIMITS OF COFFERDAM EXCAVATION, "ROCK" OR "EARTH" SHALL BE 5'-0" OUTSIDE THE PERIMETER OF THE FOOTING.

IF A COFFERDAM IS CONSTRUCTED WHICH IS LARGER THAN THE COFFERDAM EXCAVATION PAY LIMITS, PAYMENT FOR ALL UNCLASSIFIED CHANNEL EXCAVATION, INCLUDING THAT PORTION WHICH IS INSIDE THE COFFERDAM BUT OUTSIDE THE COFFERDAM EXCAVATION PAY LIMITS, WILL BE MADE AT THE CONTRACT UNIT PRICE FOR UNCLASSIFIED CHANNEL EXCAVATION.

FILE NAME = u:\9755\MSTN\15\BR0025_25_exc_abs.DGN
DATE/TIME = 02/28/02
USER = 2225

FINAL HYDRAULICS REPORT

HYDROLOGIC DATA

DRAINAGE AREA= 97 SQUARE MILES
CHARACTER OF TERRAIN: MOUNTAINOUS AND FORESTED
CHARACTER & TYPE OF STREAM: PERENNIAL, FLASHY, SUB TO SUPERCRITICAL AND SINUOUS
NATURE OF STREAMBED: GRAVEL, COBBLES TO LARGE BOULDERS

Q2.33= 2700 cfs
Q10= 6000 cfs
Q25= 8900 cfs
Q50= 11500 cfs
Q100= 13800 cfs
Q500= 22500 cfs

DATE OF FLOOD OF RECORD: SEPTEMBER 1938
WATER SURFACE ELEV.: UNKNOWN ESTIMATED DISCHARGE: UNKNOWN
NATURAL STREAM VELOCITY @ FLOOD OF RECORD @ Q50 = 12.6 fps
ICE CONDITIONS: MODERATE DEBRIS: MODERATE
DOES THE STREAM REACH MAXIMUM HIGHWATER ELEVATION RAPIDLY? YES
IS ORDINARY RISE RAPID? YES
IS STAGE AFFECTED BY UPSTREAM OR DOWNSTREAM CONDITIONS? YES
IF YES, DESCRIBE. SEARSBURG AND SOMERSET RESERVOIRS ARE UPSTREAM OF THIS SITE
WATERSHED STORAGE 4% HEADWATERS ___ UNIFORM THROUGHOUT WATERSHED X
IMMEDIATELY ABOVE SITE ___

EXISTING STRUCTURE

STRUCTURE TYPE: THREE SPAN CONCRETE T-BEAM BRIDGE YEAR BUILT: 1934
CLEAR SPAN (NORMAL TO STREAM): 105 ft
VERTICAL CLEARANCE ABOVE STREAMBED: 20 ft
WATERWAY OF FULL OPENING: 1700 sq ft
DISPOSITION OF STRUCTURE: REMOVE
TYPE OF MATERIAL UNDER SUBSTRUCTURE: UNKNOWN

WATER SURFACE ELEV. @ Q2.33= 1623.7 ft VELOCITY= 9.1 fps
Q10= 1627.6 ft " = 13.5 fps
Q25= 1630.1 ft " = 14.5 fps
Q50= 1632.0 ft " = 15.7 fps
Q100= 1634.0 ft " = 15.5 fps

LONG TERM STREAM BED CHANGES: NONE NOTED
IS THE ROADWAY OVERTOPPED BELOW THE Q100? NO FREQUENCY: ABOVE Q100
RELIEF ELEVATION: 1635 ft DISCHARGE OVER ROAD @ Q100: NONE

UPSTREAM STRUCTURE #1: TOWN: N/A - SEARSBURG RESERVOIR DISTANCE: 1.5 mi UPSTREAM
HIGHWAY NO.: ___ STRUCTURE NO.: ___
STRUCTURE TYPE: ___
CLEAR SPAN: ___ CLEAR HEIGHT: ___
YEAR BUILT: ___ FULL WATERWAY: ___

UPSTREAM STRUCTURE #2: TOWN: ___ DISTANCE: ___
HIGHWAY NO.: ___ STRUCTURE NO.: ___
STRUCTURE TYPE: ___
CLEAR SPAN: ___ CLEAR HEIGHT: ___
YEAR BUILT: ___ FULL WATERWAY: ___

DOWNSTREAM STRUCTURE: TOWN: WILMINGTON DISTANCE: 1.8 mi
HIGHWAY NO.: TH-31 STRUCTURE NO.: 57
STRUCTURE TYPE: SINGLE SPAN PLATE GIRDER BRIDGE
CLEAR SPAN: 96 ft CLEAR HEIGHT: 13 ft
YEAR BUILT: 1985 FULL WATERWAY: 1200 sq ft

PROPOSED STRUCTURE

STRUCTURE TYPE: 3 SPAN CONTINUOS CURVED PLATE GIRDER
CLEAR SPAN (NORMAL TO STREAM): 159 FT.
VERTICAL CLEARANCE ABOVE STREAMBED: 20 FT.
WATERWAY OF FULL OPENING: 1800 SQ FT.

WATER SURFACE ELEV. @ Q2.33 = 1623.4 ft VELOCITY = 8.5 fps
" Q10 = 1627.2 ft " = 13.4 fps
" Q25 = 1629.4 ft " = 14.8 fps
" Q50 = 1631.2 ft " = 15.5 fps
" Q100 = 1632.6 ft " = 15.7 fps

IS THE ROADWAY OVERTOPPED BELOW THE Q100? NO FREQUENCY: ABOVE Q100
RELIEF ELEVATION: 1633 ft* DISCHARGE OVER ROAD @ Q100: NONE
AVERAGE LOW ELEVATION OF SUPERSTRUCTURE: 1633.9 ft
VERTICAL CLEARANCE @ Q50 = 2.8 ft
SCOUR: Q100: 8 FT OF PIER SCOUR AND NO CONTRACTION SCOUR
REQUIRED CHANNEL PROTECTION: TYPE IV STONE FILL

PERMIT INFORMATION

AVERAGE DAILY FLOW: 200 cfs*
ORDINARY LOW WATER: 90 cfs* DEPTH: 1 ft
ORDINARY HIGH WATER: 1200 cfs* DEPTH: 3 ft

ADDITIONAL COMMENTS

* OPERATION OF THE SEARSBURG RESERVOIR PENSTOCK MAY HAVE AN EFFECT ON THESE FLOW RATES.

CHA CLOUGH, HARBOUR & ASSOCIATES LLP
ENGINEERS, SURVEYORS, PLANNERS & LANDSCAPE ARCHITECTS
11 WINNERS CIRCLE ALBANY, NEW YORK, 12205

DESIGN CRITERIA:
1. DESIGN LIVE LOAD AASHTO HS-25
2. DESIGN SPAN 239'-6"
3. ALLOWABLE LOAD FOR SPREAD FOOTINGS ON SOIL 4TSF ON LEDGE -
4. ALLOWABLE LOAD FOR PILING SEE DRILLED SHAFT NOTES, BR3 TYPE SEE DRILLED SHAFT NOTES, BR3 ESTIMATED LENGTH SEE DRILLED SHAFT NOTES, BR3
5. STRUCTURAL STEEL AASHTO M270 GRADE 50 W UNPAINTED
6. REINFORCING STEEL AASHTO GRADE 60 M31 BILLET STEEL
7. CONCRETE CLASS A (QC/QA) - f'c=4000 PSI
CLASS B (HPC-B) - f'c=3500 PSI
CLASS A (HPC-A) - f'c=4000 PSI

TRAFFIC MAINTENANCE:
1. IS TRAFFIC TO BE MAINTAINED? YES IF YES, ON EXISTING STRUCTURE YES OR ON TEMPORARY BRIDGE -
2. TEMPORARY BRIDGE REQUIREMENTS: ONE OR TWO WAY - TRAFFIC CONTROL SIGNALS REQUIRED -
MINIMUM CLEAR SPAN (NORMAL TO STREAM): - VERTICAL CLEARANCE ABOVE STREAMBED: -
WATERWAY OF FULL OPENING: -
ARE SIDEWALKS REQUIRED? - IF SO, ON WHAT SIDE? -
STRUCTURE TYPE: -

LOAD FACTOR LOAD RATING (TONS)

LOADING LEVELS (LOAD FACTOR)	TRUCK H	HS	3S2	6 AXLE	3A.STR.	4A.STR.	5A.SEMI
INVENTORY A= 2.17; B = 1.00	31	56					
POSTED A = 1.55; B = 1.40	44	79	288		266	268	277
OPERATING A = 1.30; B = 1.67	52	94	343	353	317	319	

$$RF = \frac{\phi M_N - 1.3\,M_{DL}}{A \times M_{LL+I}}$$

$$\frac{.95\,F_Y\,S_{LL+I} - M_{DL}\frac{S_{LL+I}}{S_{DL}} - M_{SDL}\frac{S_{LL+I}}{S_{SDL}}}{1.67\,M_{LL+I}}$$

PROJECTED TRAFFIC DATA

YEAR	ADT	DHV	% D	% T	% ADTT
2000	-	-	-	-	-
2020	-	-	-	-	-

20 year ESAL for flexible pavement from 2000 to 2020: 4,825,000
40 year ESAL for flexible pavement from 2000 to 2040: 17,229,000
Design speed: 100 KM/H

STATE OF VERMONT
AGENCY OF TRANSPORTATION

Town Of SEARSBURG	Bridge No. 25
Highway No. VT. RTE. 9	Log Sta.
	Surv. Sta. 120+00

VT. RTE. 9 OVER DEERFIELD RIVER

PRELIMINARY INFORMATION - BR 25

Designed By D. VIENI	Drawn by K. DETRICK/Wm. WEATHERBY
Checked By M. OLSTAD Date 2/2002	Bridge Design Supervisor M. OLSTAD Date 2/2002
PROJECT SEARSBURG - WILMINGTON	PROJECT NO. NHF 010-1(18)
L.G.C. Info.	
Bridge Sheet No. BR201	Sheet 127 OF 435

BRIDGE QUANTITY SHEET

STATE OF VERMONT
AGENCY OF TRANSPORTATION
STRUCTURES DIVISION

	ITEM NO.	ITEM	UNIT	QUANTITY BREAKDOWN								TOTAL	FINAL
				SUPER-STRUCTURE	ABUTMENT 1	PIER 1	PIER 2	ABUTMENT 2	APPROACH SLABS	CHANNEL QUANTITIES	MISC.		
Ⓡ	203.27	UNCLASSIFIED CHANNEL EXCAVATION	CY		415			620				1,035	
Ⓡ	203.32	GRANULAR BORROW	CY		1,400			950				2,350	
	204.30	GRANULAR BACKFILL FOR STRUCTURES	CY		730			825				1,555	
	208.30	COFFERDAM EXCAVATION, EARTH	CY			310	400					710	
	208.35	COFFERDAM EXCAVATION, ROCK	CY			200	225					425	
	208.40	COFFERDAM @ BR25, PIER ONE	LS			1						1	
	208.40	COFFERDAM @ BR25, PIER TWO	LS				1					1	
Ⓡ	490.30	SUPERPAVE BITUMINOUS CONCRETE PAVEMENT (PG 58-28)	TON	164								164	
	501.221	CONCRETE CLASS A, QC/QA	CY	270								270	
	501.22	CONCRETE, CLASS A (HPC-A)	CY	35	3			4				42	
	501.25	CONCRETE, CLASS B (HPC-B)	CY		450	290	242	461	150			1,593	
	504.10	FURNISHING EQUIPMENT FOR DRIVING PILING @ BR25 (MOD)	LS								1	1	
	505.25	CIP CONCRETE PILING (MOD - EARTH) (5' DIA)	LF				31					31	
	505.25	CIP CONCRETE PILING (MOD - ROCK) (5' DIA)	LF				15					15	
	505.25	CIP CONCRETE PILING (MOD - EARTH) (8' DIA)	LF			75						75	
	505.40	PILE LOADING TEST (MOD)	EA			3	3					6	
	506.55	STRUCTURAL STEEL (PLATE GIRDER)	LB	414,300								414,300	
	507.15	REINFORCING STEEL	LB		38,675	56,420	41,390	44,475	160			181,210	
	507.17	EPOXY COATED REINFORCING STEEL	LB	110,100	185			165	16,595			127,045	
	508.15	SHEAR CONNECTORS [2502 - 7/8" DIA. x 7"]	LS	1								1	
	513.25	STRUCTURAL PAINTING, SHOP APPLIED (17 TONS)	LS	1								1	
	513.40	SURFACE PREPARATION, SHOP	LS	1								1	
	514.10	WATER REPELLENT	GAL	95	18	18	16	15	23			185	
	516.10	BRIDGE EXPANSION JOINT (VT. JOINT)	LF		67							67	
	516.10	BRIDGE EXPANSION JOINT (PLUG JOINT)	LF					56				56	
	519.20	SHEET MEMBRANE WATERPROOFING (MOD:- TORCH APPLIED)	SY	1,180					320			1,500	
	525.33	BRIDGE RAILING - NETC 2 RAIL	LF	593								593	
	529.15	REMOVAL OF STRUCTURE @ STA. 119+00 LT.	EA								1	1	
	531.10	BEARING DEVICE ASSEMBLY (EXPANSION @ ABUTMENT)	EA		5		5					10	
	531.10	BEARING DEVICE ASSEMBLY (EXPANSION @ PIER)	EA			5						5	
	531.10	BEARING DEVICE ASSEMBLY (FIXED @ PIER)	EA				5					5	
	613.10	STONE FILL, TYPE I	CY		5			2				7	
	613.13	STONE FILL, TYPE IV	CY		1,075	595	1,225	515				3,410	
	616.28	CAST-IN-PLACE CONCRETE CURB, TYPE B	LF		80			80				160	
	649.31	GEOTEXTILE UNDER STONE FILL			725	180	735	375				2,015	
	651.40	GRUBBING MATERIAL	SY		580		560	375				1,515	

Ⓡ DESIGNATES ROADWAY ITEM

BRIDGE(S) AT STATION(S) STA. 118+61.38 TO 121+08.47
LOCATION(S) VT. RTE. 9 OVER DEERFEILD RIVER

PREPARED BY: WM WEATHERBY
CHECKED BY: D. VIENI
SUPERVISOR: M.W. OLSTAD

PROJECT: SEARSBURG - WILMINGTON PROJECT NO: NHF 010-1(18)
BR BR202 OF
SHEET NO: 128 OF 435

dd096bq2.1

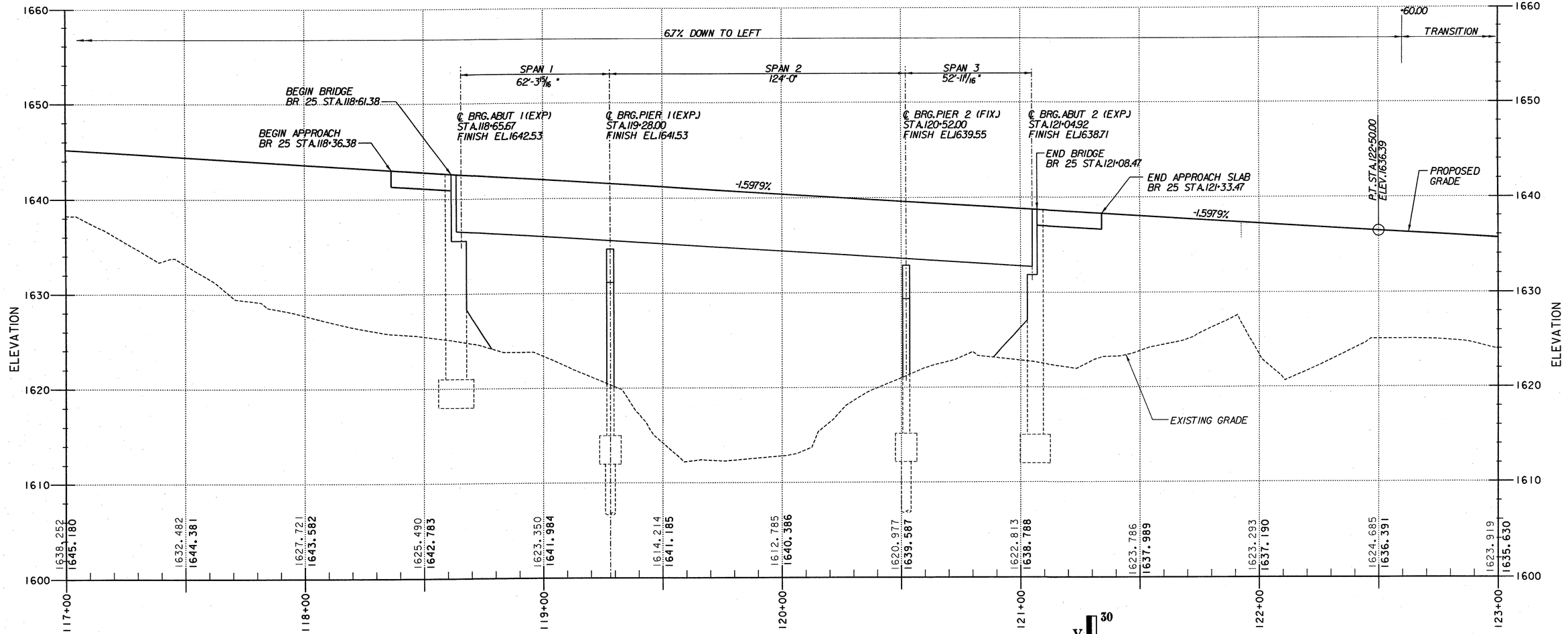

PROFILE - VT.RTE.9 OVER DEERFIELD RIVER - BR 25

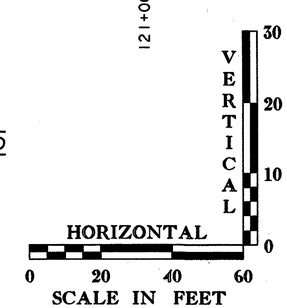

STATE OF VERMONT
AGENCY OF TRANSPORTATION

Town Of	SEARSBURG	Bridge No. 25	
		Log Sta.	
Highway No.	VT. RTE. 9	Surv. Sta.	
VT. RTE. 9 OVER DEERFIELD RIVER			
PROFILE - BR 25			
Designed By D. VIENI		Drawn by K. DETRICK	
Checked By M. OLSTAD	Date 12/2001	Bridge Design Supervisor M. OLSTAD	Date 12/2001
PROJECT SEARSBURG - WILMINGTON		PROJECT NO. NHF 010-1(18)	
I.G.C. Info.			
Bridge Sheet No. BR203		Sheet 129 OF 435	

CLOUGH, HARBOUR & ASSOCIATES LLP
ENGINEERS, SURVEYORS, PLANNERS & LANDSCAPE ARCHITECTS
11 WINNERS CIRCLE ALBANY, NEW YORK, 12205

FILE NAME =u:\9755\MSTN\15\BRDG25\25_prfile.plt
DATE/TIME =12/12/01
USER =2225

SOIL CLASSIFICATION

AASHTO	
A1	Gravel and Sand
A3	Fine Sand
A2	Silty or Clayey Gravel and Sand
A4	Silty Soil - Low Compressibility
A5	Silty Soil - Highly Compressible
A6	Clayey Soil - Low Compressibility
A7	Clayey Soil - Highly Compressible

ROCK QUALITY DESIGNATION

R.Q.D. (%)	ROCK DESCRIPTION
<25	Very Poor
25 to 50	Poor
51 to 75	Fair
76 to 90	Good
>90	Excellent

SHEAR STRENGTH

UNDRAINED SHEAR STRENGTH IN P.S.F.	CONSISTENCY
<250	Very Soft
250-500	Soft
500-1000	Med. Stiff
1000-2000	Stiff
2000-4000	Very Stiff
>4000	Hard

CORRELATION GUIDE OF "N" TO DENSITY/CONSISTENCY

DENSITY (GRANULAR SOILS)		CONSISTENCY (COHESIVE SOILS)	
N	DESCRIPTIVE TERM	N	DESCRIPTIVE TERM
<5	Very Loose	<2	Very Soft
5-10	Loose	2-4	Soft
11-24	Med. Dense	5-8	Med. Stiff
25-50	Dense	9-15	Stiff
>50	Very Dense	16-30	Very Stiff
		31-60	Hard
		>60	Very Hard

COMMONLY USED SYMBOLS

▼	Water Elevation
⊗	Standard Penetration Boring
⊕	Auger Boring
⊙	Rod Sounding
S	Sample
N	Standard Penetration Test Blow Count Per Foot For: 2" O.D. Sampler 1 3/8" I.D. Sampler Hammer Weight Of 140 Lbs. Hammer Fall Of 30"
VS	Field Vane Shear Test
US	Undisturbed Soil Sample
B	Blast
DC	Diamond Core
MD	Mud Drill
WA	Wash Ahead
HSA	Hollow Stem Auger
AX	Core Size 1 1/8"
BX	Core Size 1 5/8"
NX	Core Size 2 1/8"
M	Double Tube Core Barrel Used
LL	Liquid Limit
PL	Plastic Limit
PI	Plasticity Index
NP	Non Plastic
w	Moisture Content (Dry Wgt. Basis)
D	Dry
M	Moist
MTW	Moist To Wet
W	Wet
Sat	Saturated
Bo	Boulder
Gr	Gravel
Sa	Sand
Si	Silt
Cl	Clay
HP	Hardpan
Le	Ledge
NLTD	No Ledge To Depth
CNPF	Can Not Penetrate Further
TLOB	To Ledge Or Boulder
NR	No Recovery
Rec.	Recovery
%Rec.	Percent Recovery
RQD	Rock Quality Designation
CBR	California Bearing Ratio
<	Less Than
>	Greater Than
R	Refusal (N > 100)

COLOR

blk	Black	pnk	Pink
bl	Blue	pu	Purple
brn	Brown	rd	Red
dk	Dark	tn	Tan
gry	Gray	wh	White
gn	Green	yel	Yellow
lt	Light	mltc	Multicolored
or	Orange		

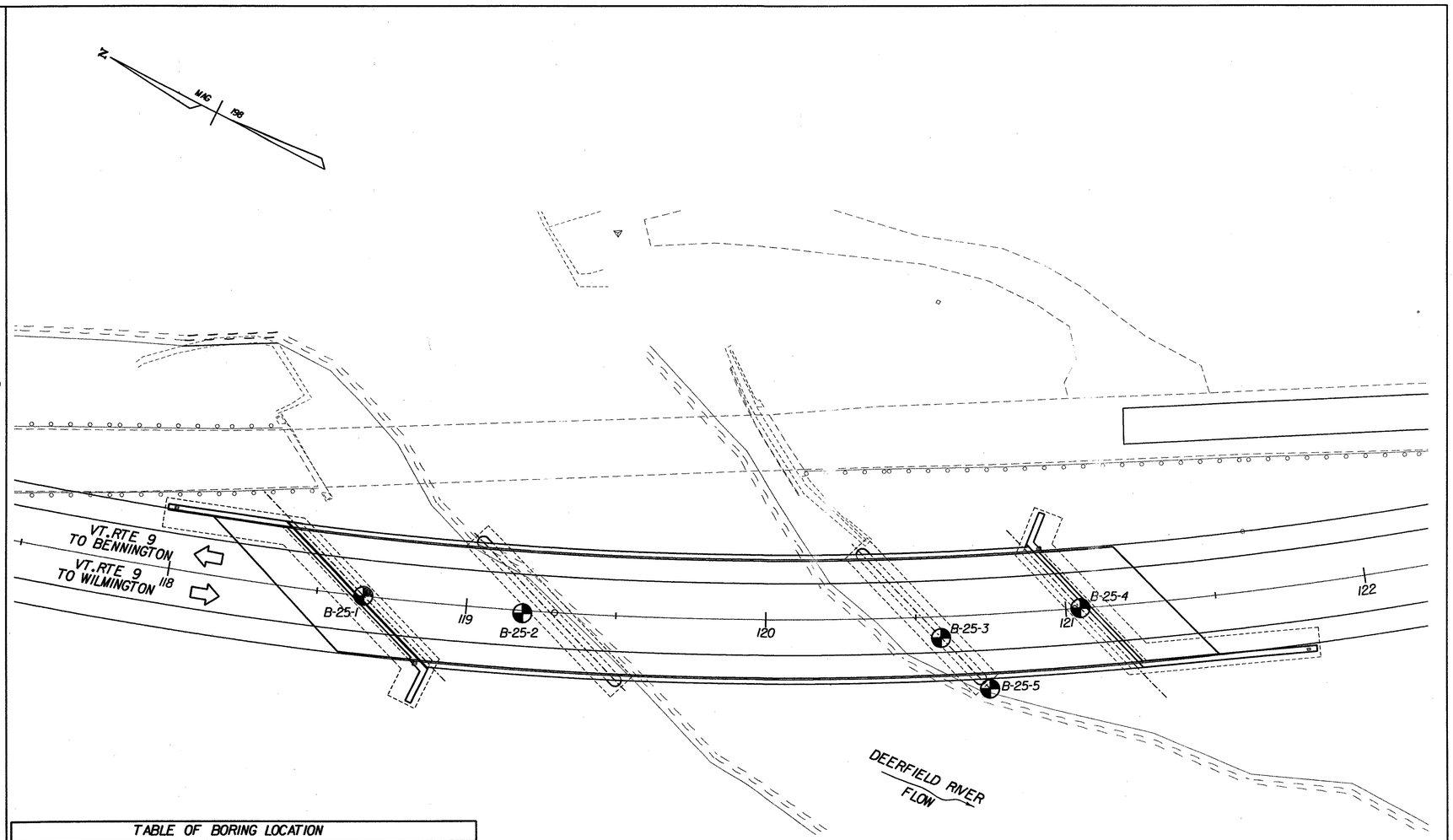

BORING LOCATION PLAN - BRA 25

SCALE 1" = 20'-0

20 0 20

LEGEND:

STANDARD PENETRATION BORING

TABLE OF BORING LOCATION				
BORING NO.	STATION	OFFSET	GROUND ELEV.	ELEV. TLOB
B-25-1	118+61.38	-	1624.80	NLTD
B-25-2	119+18.84	-	1621.65	1573.65
B-25-3	120+58.20	7.19' RT.	1621.00	1605.50
B-25-4	121+05.00	-	1622.65	1608.15
B-25-5	120+73.48	24.99' RT.	1619.5	1597.50

DEFINITIONS (AASHTO)

BEDROCK (LEDGE) - Rock in its native location of indefinite thickness.

BOULDER - A rock fragment with an average dimension > 12 inches.

COBBLE - Rock fragments with an average dimension between 3 and 12 inches.

GRAVEL - Rounded particles of rock < 3" and > 0.0787" (#10 sieve).

SAND - Particles of rock < 0.0787" (#10 sieve) and > 0.0029" (#200 sieve).

SILT - Soil < 0.0029" (#200 sieve), non or slightly plastic and exhibits no strength when air-dried.

CLAY - Fine grained soil, exhibits plasticity when moist and considerable strength when air-dried.

VARVED - Alternate layers of silt and clay.

HARDPAN - Extremely dense soil, cemented layer, not softened when wet.

MUCK - Soft organic soil (containing > 10% organic material.

MOISTURE CONTENT - Weight of water divided by dry weight of soil.

FLOWING SAND - Granular soil so saturated (loose) that it flows into drill casing during extraction of wash rod.

STRIKE - Angle from magnetic north to line of intersection of bed with a horizontal plane.

DIP - Inclination of bed with a horizontal plane.

GENERAL NOTES

1. The subsurface explorations shown herein were made between 12/20/00 and 1/8/01 by New England Boring Contractor.
2. Soil and rock classifications, properties and descriptions are based on engineering interpretation from available subsurface information by the Agency and may not necessarily reflect actual variations in subsurface conditions that may be encountered between individual boring or sample locations.
3. Observed water levels and/or conditions indicated are as recorded at the time of exploration and may vary according to the prevailing rainfall, methods of exploration and other factors.
4. Engineering judgement was exercised in preparing the subsurface information presented herein. Analysis and interpretation of subsurface data was performed and interpreted for Agency design and estimating purposes. Presentation of the information in the Contract is intended to provide the Contractor access to the same data available to the Agency. The subsurface information is presented in good faith and is not intended as a substitute for personal investigation, independent interpretation, independent analysis or judgement by the Contractor.
5. Pictorial structure details shown on the boring plan layout or soils profile are for illustrative purposes only and may not accurately portray final contract details.
6. Terminology used on boring logs to describe the hardness, degree of weathering, and spacing of fractures, joints and other discontinuities in the bedrock is defined in the AASHTO Manual on Subsurface Investigations, 1988.

CLOUGH, HARBOUR & ASSOCIATES LLP
ENGINEERS, SURVEYORS, PLANNERS & LANDSCAPE ARCHITECTS

STATE OF VERMONT
AGENCY OF TRANSPORTATION

Town Of SEARSBURG	Bridge No. 25
Highway No. VT. RTE. 9	Log Sta.
	Surv. Sta.
VT. RTE. 9 OVER DEERFIELD RIVER	
BORING INFORMATION SHEET - BR-25	
Designed By J. GORMAN	Drawn by K. DETRICK
Checked By M. QUINN Date 12/2001	Bridge Design Supervisor M. OLSTAD Date 12/2001
PROJECT SEARSBURG - WILMINGTON	PROJECT NO. NHF 010-1(18)
I.G.C. Info.	
Bridge Sheet No. BR204	Sheet 130 OF 435

FILE NAME = U:\Y975\MSTN\15\BR0025\25_bor-sp1n.PLT
DATE/TIME = 12/13/2001
USER = BSH

ABUT. 1 BOTTOM OF FTG. EL. 1618.00

CLOUGH, HARBOUR & ASSOCIATES LLP
ENGINEERS, SURVEYORS, PLANNERS & LANDSCAPE ARCHITECTS

VT. RTE. 9 OVER DEERFIELD RIVER
SUBSURFACE LOG
HOLE NUMBER B-25-1

PROJECT NUMBER: 9755.07.01 12/29/00 PAGE 1 OF 2

LOCATION: SEARSBURG, VT
DRILL FLUID: WATER @ 2 FT. DRILLING METHOD: 3" FJC
CLIENT: STATE OF VERMONT AGENCY OF TRANSPORTATION
CONTRACTOR: NEW ENGLAND BORING CONTRACTORS, INC.
DRILLER: T. CARPENTER INSPECTOR: J. COPPOLA
START DATE: 1-3-01 FINISH DATE: 1-4-01
SURFACE ELEV.: 1624.80 (FT, ESTIMATED) CHECKED BY: MSO

WATER LEVEL OBSERVATIONS DURING DRILLING	DATE	TIME	WATER DEPTH (FT)	CASING BOTTOM (FT)	HOLE BOTTOM (FT)
	1-4-01	11:30	19	20	20

SAMP./CORE NUMBER	SAMP. ADV. (FT) / CORE (FT)	RECOVERY (FT)	BLOWS PER 6" ON SPLIT SPOON SAMPLER	"N" VALUE OR ROCK QUALITY	SAMPLE	DEPTH (FEET)	GRAPHICS	DESCRIPTION AND CLASSIFICATION	ELEVATION (FEET)	REMARKS ON CHARACTER OF DRILLING, WATER RETURN, ETC.	WATER LEVELS AND/OR WELL DATA
S-1	2	0.5	2-1-1-1	2				•UF. SAND•U, SOME SILT, LITTLE M.C SAND, ORGAINCS, OK. BROWN, V. LOOSE, WET (A-4)	RACE		
								•UCOBBLES AND BOULDERS•U		CORED TO 5 FT., COBBLES AND BOULDERS TO END OF BORING	
R-1	3	0	NA						1620		
S-2	2	1.2	10-15-17-33	32		5		•UF. SAND•U, SOME SILT, LITTLE M.C. SAND, GRAVEL, TRACE CLAY, GRAY/BROWN, DENSE, MOIST (A-4)	LITTLE F.C. ST	ROLLER BIT TO 10 FT.	
S-3	2	0.9	13-15-17-36	32		10		SIMILIAR SOIL (A-4)	1615	ROLLER BIT TO 15 FT.	
S-4	1.1	0.3	38-46-100/.1	R		15		INSUFFICIENT SAMPLE	1610	ROLLER BIT TO 20 FT.	
S-5	1.6	0.6	25-30-46-50/.	76		20		BECOMES V. DENSE (A-4)	1605	CORED TO 26.5 FT.	
								•UCOBBLES AND BOULDERS•U			
R-2	5	3.1	NA			25		INSUFFICIENT SAMPLE (CONTINUED)	1600	SS REFUSAL AT 26.6 FT., CORED TO 31.6	
S-6	0	0	100/0	R							
R-3	5	2.8	NA			30		•UF. SAND•U, SOME SILT, LITTLE M.C. SAND, GRAY/GREEN, V. DENSE, MOIST (A-4)	1595	CORED TO 38.6 FT.	
S-7	2	1.2	22-23-44-58	67		35			1590		
R-4	5	2.4	NA								
S-8	1	0.8	58-97/.5	R		40		SIMILIAR SOIL (A-4)	1585	CORED TO 44.6 FT.	
R-5	5	2.8	NA								
S-9	1.6	1.4	9-30-62-50/.	92		45		•UF. SAND•U, SOME SILT, LITTLE M.C. SAND, GRAVEL, GRAY/BROWN, V. DENSE, MOIST (A-4)	1580	CORED TO 50 FT.	
R-6	3.8	0	NA								
S-10	0.5	0.5	100/.5	R		50		GRADES TO TRACE CLAY (A-4) END OF BORING AT 50.5 FT	1575	SS REFUSAL AT 50.5 FT.	
						55			1570		

PIER 1 BOTTOM OF FTG. EL. 1612.00

CLOUGH, HARBOUR & ASSOCIATES LLP
ENGINEERS, SURVEYORS, PLANNERS & LANDSCAPE ARCHITECTS

VT. RTE. 9 OVER DEERFIELD RIVER
SUBSURFACE LOG
HOLE NUMBER B-25-2

PROJECT NUMBER: 9755.07.01 12/29/00 PAGE 1 OF 2

LOCATION: SEARSBURG, VT
DRILL FLUID: WATER @ 2 FT. DRILLING METHOD: 3" FJC
CLIENT: STATE OF VERMONT AGENCY OF TRANSPORTATION
CONTRACTOR: NEW ENGLAND BORING CONTRACTORS, INC.
DRILLER: T. CARPENTER INSPECTOR: J. COPPOLA
START DATE: 1-5-01 FINISH DATE: 1-8-01
SURFACE ELEV.: 1621.65 (FT, ESTIMATED) CHECKED BY: MSO

WATER LEVEL OBSERVATIONS DURING DRILLING	DATE	TIME	WATER DEPTH (FT)	CASING BOTTOM (FT)	HOLE BOTTOM (FT)
	1-5-01	10:15	6	10	10

SAMP./CORE NUMBER	SAMP. ADV. (FT) / CORE (FT)	RECOVERY (FT)	BLOWS PER 6" ON SPLIT SPOON SAMPLER	"N" VALUE OR ROCK QUALITY	SAMPLE	DEPTH (FEET)	GRAPHICS	DESCRIPTION AND CLASSIFICATION	ELEVATION (FEET)	REMARKS ON CHARACTER OF DRILLING, WATER RETURN, ETC.	WATER LEVELS AND/OR WELL DATA
								•UF.M.C. SAND•U, TRACE F.C. GRAVEL, TRACE SILT, BROWN, M. DENSE, WET (A-1-A)			
S-1	2	0.8	14-15-8-9	23					1620		
S-2	2	0.8	23-29-41-49	70		5		•UF. SAND•U, SOME SILT, LITTLE M.C. SAND, GRAVEL, TRACE CLAY, GRAY/BROWN, V. DENSE, MOIST (A-4)	LITTLE F.C.		
S-3	0.1	0	100/.1	R		10		INSUFFICIENT SAMPLE	1615	NO SAMPLE RECOVERY	
S-4	1	0.5	23-24-51-63	75		15		•UF. SAND•U, SOME SILT, LITTLE M.C. SAND, GRAVEL, GRAY/GREEN, V. DENSE, MOIST (A-4)	1610		
R-1	4	2	NA						LITTLE F.C.	CORED TO 20 FT., USED CORE BARREL TO ADVANCE BORING	
S-5	0.1	0.1	100/.1	R		20		INSUFFICIENT SAMPLE	1605	POOR SAMPLE RECOVERY	
R-2	5	1.5	NA								
S-6	2	1.6	18-23-36-15	59		25		•UF. SAND•U, SOME SILT, LITTLE M.C. SAND, GRAY/BROWN, V. DENSE, MOIST (A-4)	1600	GRADATION PERFORMED ON SAMPLE S-6 AND S-7 (COMPOSITE)	
R-3	3	1.4	NA						1595		
S-7	2	1.2	13-14-21-28	35		30		SIMILIAR SOIL (A-4)	1590		
R-4	3	1	NA								
S-8	2	1.3	13-18-25-40	43		35		SIMILIAR SOIL (A-4)	1585		
R-5	3	1	NA								
S-9	2	1.2	26-30-40-41	70		40		SIMILIAR SOIL (A-4)	1580		
R-6	3	0.8	NA								
						45			1575	ROLLER BIT TO 48 FT.	
								•USCHIST•U, M. HARD, MODERATELY WEATHERED, CLOSE FRACTURE SPACING, FAIR ROD			
R-7	5	5	NA	55%		50		GRADES TO GOOD ROD	1570		
						55			1565		
R-8	5	5	NA	87%				END OF BORING AT 58 FT			

BOTTOM OF SHAFT EL. 1587.00

PIER 2 BOTTOM OF FTG. EL. 1612.00

CLOUGH, HARBOUR & ASSOCIATES LLP
ENGINEERS, SURVEYORS, PLANNERS & LANDSCAPE ARCHITECTS

VT. RTE. 9 OVER DEERFIELD RIVER
SUBSURFACE LOG
HOLE NUMBER B-25-3

PROJECT NUMBER: 9755.07.01 12/29/00 PAGE 1 OF 1

LOCATION: SEARSBURG, VT
DRILL FLUID: WATER @ 1 FT., DRILLING METHOD: 3" FJC
CLIENT: STATE OF VERMONT AGENCY OF TRANSPORTATION
CONTRACTOR: NEW ENGLAND BORING CONTRACTORS, INC.
DRILLER: T. CARPENTER INSPECTOR: J. COPPOLA
START DATE: 12-21-00 FINISH DATE: 12-21-00
SURFACE ELEV.: 1621.00 (FT, ESTIMATED) CHECKED BY: MSO

WATER LEVEL OBSERVATIONS DURING DRILLING	DATE	TIME	WATER DEPTH (FT)	CASING BOTTOM (FT)	HOLE BOTTOM (FT)

SAMP./CORE NUMBER	SAMP. ADV. (FT) / CORE (FT)	RECOVERY (FT)	BLOWS PER 6" ON SPLIT SPOON SAMPLER	"N" VALUE OR ROCK QUALITY	SAMPLE	DEPTH (FEET)	GRAPHICS	DESCRIPTION AND CLASSIFICATION	ELEVATION (FEET)	REMARKS ON CHARACTER OF DRILLING, WATER RETURN, ETC.	WATER LEVELS AND/OR WELL DATA
S-1	1	0.1	3-3					•UF.M.C. SAND•U, SOME ORGANICS, LITTLE F.C. GRAVEL, LITTLE SILT, BROWN, LOOSE, WET (A-3)		POOR SAMPLE	
								•UCOBBLES AND BOULDERS•U	1620		
R-1	4	3	NA								
S-2	2	1	24-30-47-35	77		5		•UF.C. GRAVEL•U, SOME F.M.C. SAND, LITTLE SILT, LITTLE F.C. GRAVEL, GRAY/GREEN, V. DENSE, MOIST (A-2-4)	1615	GRADATION PERFORMED ON SAMPLE S-2	
S-3	2	0.9	25-31-36-43	67		10		SIMILIAR SOIL (A-2-4)	1610		
S-4	0.2	0.2	100/.2	R		15		SIMILIAR SOIL (A-2-4)			
								•USCHIST•U, M. HARD, MODERATELY WEATHERED, CLOSE FRACTURE SPACING, EXCELLENT ROD	1605	GRAY WASH AT 15FT.	
R-2	5		NA	90%		20		SIMILIAR BEDROCK	1600	GRAY/GREEN WASH AT 20FT.	
R-3	5	5	NA	95%		25		END OF BORING AT 25.5 FT	1595		

APPROX. BOTTOM OF SHAFT EL. 1600.00 (SHAFT 1 & 2)

STATE OF VERMONT
AGENCY OF TRANSPORTATION

Town Of SEARSBURG	Bridge No. 25
Highway No. VT. RTE. 9	Log Sta.
	Surv. Sta.
VT. RTE. 9 OVER DEERFIELD RIVER	
BORING LOGS - BR 25	
Designed By M. QUINN	Drawn by J. FORTE
Checked By M. QUINN Date 2/2002	Bridge Design Supervisor M. OLSTAD Date 2/2002
PROJECT SEARSBURG - WILMINGTON	PROJECT NO. NHF 010-1(18)
L.G.C. Info.	
Bridge Sheet No. BR205	Sheet 131 OF 435

CLOUGH, HARBOUR & ASSOCIATES LLP
ENGINEERS, SURVEYORS, PLANNERS & LANDSCAPE ARCHITECTS
13 WINNERS CIRCLE ALBANY, NEW YORK, 12205

FILE NAME =u:\9755\VSTN\15\BRDG25\25_bor1og1.DGN
DATE/TIME =01/29/02
USER =2225

ABUT. 2 BOTTOM OF FTG. EL. 1612.00

CLOUGH, HARBOUR & ASSOCIATES LLP
ENGINEERS, SURVEYORS, PLANNERS & LANDSCAPE ARCHITECTS

VT. RTE. 9 OVER DEERFIELD RIVER
SUBSURFACE LOG
HOLE NUMBER B-25-4

PROJECT NUMBER: 9755.07.01 12/29/00 — PAGE 1 OF 2

LOCATION: SEARSBURG, VT — DRILL FLUID: WATER @ 6 FT. — DRILLING METHOD: 3" FJC

CLIENT: STATE OF VERMONT AGENCY OF TRANSPORTATION

CONTRACTOR: NEW ENGLAND BORING CONTRACTORS, INC.

DRILLER: T. CARPENTER — INSPECTOR: J. COPPOLA

START DATE: 12-20-00 — FINISH DATE: 12-21-00

SURFACE ELEV: 1622.65 (FT; ESTIMATED) — LOGGED BY: MSO

WATER LEVEL OBSERVATIONS DURING DRILLING	DATE	TIME	WATER DEPTH (FT)	CASING BOTTOM (FT)	HOLE BOTTOM (FT)
	12-20-00	14:00	5	11	13

SAMP./CORE RUN NO.	SAMP./CORE ADV. (FT)	SAMP./CORE LEN. (FT)	RECOVERY (FT)	BLOWS PER 6" ON SPLIT SPOON SAMPLER	"N" VALUE OR ROD	SAMPLE	DEPTH (FEET)	GRAPHICS	DESCRIPTION AND CLASSIFICATION	ELEVATION (FEET)	REMARKS ON CHARACTER OF DRILLING, WATER RETURN, ETC.	WATER LEVELS AND/OR WELL DATA
S-1	2			4-5-10-8	15				*UF,M,C. SAND=U, SOME F.C. GRAVEL, TRACE SILT, BROWN, M. DENSE, MOIST (A-2-4)			
S-2	2			5-8-12-10	20				SIMILAR SOIL (A-2-4)	1620	GRADATION PERFORMED ON SAMPLE S-2 AND S-3 (COMPOSITE)	
							5				BOULDER @ 5FT.	
									*UCOBBLES AND BOULDERS=U		COBBLES @ 6FT.	
R-1	5			NA						1615		
							10					
S-3	1.5			26-38-114/.5	R				*UF,M,C. SAND=U, SOME SILT, SOME F.C. GRAVEL, BROWN, M. DENSE, MOIST (A-2-4)	1610	START ROLLER BIT ROCK @ -13FT.	
							15		*USCHIST=U, M. HARD, MODERATELY WEATHERED, CLOSE FRACTURE SPACING, FAIR ROD		CORE @ 14.5FT., GRAY WASH BROWN WASH @ 15FT., 16FT., AND 18.5FT.	
R-2	5	5	NA	60%						1605		
							20		SIMILAIR ROCK			
R-3	5	5	NA	52%						1600		
							25		GRADES TO EXCELLENT ROD			
R-4	5	5	NA	100%					GRADES TO EXCELLENT ROD (CONTINUED	1595		
							30		END OF BORING AT 29.5 FT			
										1590		
							35					
										1585		
							40					
										1580		
							45					
										1575		
							50					
										1570		
							55					
										1565		

PIER 2 BOTTOM OF FTG. EL. 1612.00

CLOUGH, HARBOUR & ASSOCIATES LLP
ENGINEERS, SURVEYORS, PLANNERS & LANDSCAPE ARCHITECTS

VT. RTE. 9 OVER DEERFIELD RIVER
SUBSURFACE LOG
HOLE NUMBER B-25-5

PROJECT NUMBER: 9755.07.01 12/29/00 — PAGE 1 OF 2

LOCATION: SEARSBURG, VT — DRILL FLUID: WATER @ 2 FT. — DRILLING METHOD: 3" FJC

CLIENT: STATE OF VERMONT AGENCY OF TRANSPORTATION

CONTRACTOR: NEW ENGLAND BORING CONTRACTORS, INC.

DRILLER: T. CARPENTER — INSPECTOR: J. COPPOLA

START DATE: 1-2-01 — FINISH DATE: 1-3-01

SURFACE ELEV: 1619.50 (FT; ESTIMATED) — LOGGED BY: MSO

WATER LEVEL OBSERVATIONS DURING DRILLING	DATE	TIME	WATER DEPTH (FT)	CASING BOTTOM (FT)	HOLE BOTTOM (FT)
	1-2-01	15:30	1	5	5

SAMP./CORE RUN NO.	SAMP./CORE ADV. (FT)	SAMP./CORE LEN. (FT)	RECOVERY (FT)	BLOWS PER 6" ON SPLIT SPOON SAMPLER	"N" VALUE OR ROD	SAMPLE	DEPTH (FEET)	GRAPHICS	DESCRIPTION AND CLASSIFICATION	ELEVATION (FEET)	REMARKS ON CHARACTER OF DRILLING, WATER RETURN, ETC.	WATER LEVELS AND/OR WELL DATA
S-1	1.5	1.2		10-15-30	45				*USILT=U, TRACE F.M.C. SAND, TRACE ORGANICS, DK. BROWN, HARD, MOIST (A-4)			
									*UCOBBLES AND BOULDERS=U		COBBLES AND BOULDERS TO END OF BORING	
R-1	3.5				R					1615		
S-2	1	0.8		81-103/.5	R		5		*UF,M,C. SAND=U, SOME F.C. GRAVEL, LITTLE SILT, GRAY/BROWN, V. DENSE, MOIST (A-1-A)			
									*UCOBBLES AND BOULDERS=U			
R-2	4				R					1610		
S-3	2	1.2		23-38-35-43	73		10		*UF. SAND=U, SOME SILT, LITTLE M.C. SAND, GRAY/GREEN, V. DENSE, MOIST (A-4)			
										1605		
S-4	1.5	0.8		25-25-103/.5	R		15		SIMILIAR SOIL (A-4)			
										1600		
S-5	0.1	0.1		100/.1	R		20		INSUFFICIENT SAMPLE			
									*USCHIST=U, M. HARD, MODERATELY WEATHERED, M. FRACTURE, GOOD ROD	1595		
R-3	5	4.9		NA	89%		25					
									GRADES TO FAIR ROD	1590		
R-4	5	4.9		NA	73%		30					
									END OF BORING AT 32 FT			
							35			1585		
										1580		
							40					
										1575		
							45					
										1570		
							50					
										1565		
							55					
										1560		

BOTTOM OF SHAFT EL. 1592.00 (SHAFT 3)

CLOUGH, HARBOUR & ASSOCIATES LLP
ENGINEERS, SURVEYORS, PLANNERS & LANDSCAPE ARCHITECTS
33 WINNERS CIRCLE ALBANY, NEW YORK, 12205

STATE OF VERMONT
AGENCY OF TRANSPORTATION

Town Of SEARSBURG	Bridge No. 25
Highway No. VT. RTE. 9	Log Sta.
	Surv. Sta.
VT. RTE. 9 OVER DEERFIELD RIVER	
BORING LOGS - BR 25	
Designed By M. QUINN	Drawn by J. FORTE
Checked By M. QUINN Date 2/2002	Bridge Design Supervisor M. OLSTAD Date 2/2002
PROJECT SEARSBURG - WILMINGTON	PROJECT NO. NHF 010-1(8)
L.G.C. Info.	
Bridge Sheet No. BR205A	Sheet 132 OF 435

FILE NAME =u:\9755\MSTN\15\BR0025\25_bor-log2.DGN
DATE/TIME =02/20/02
USER =2225

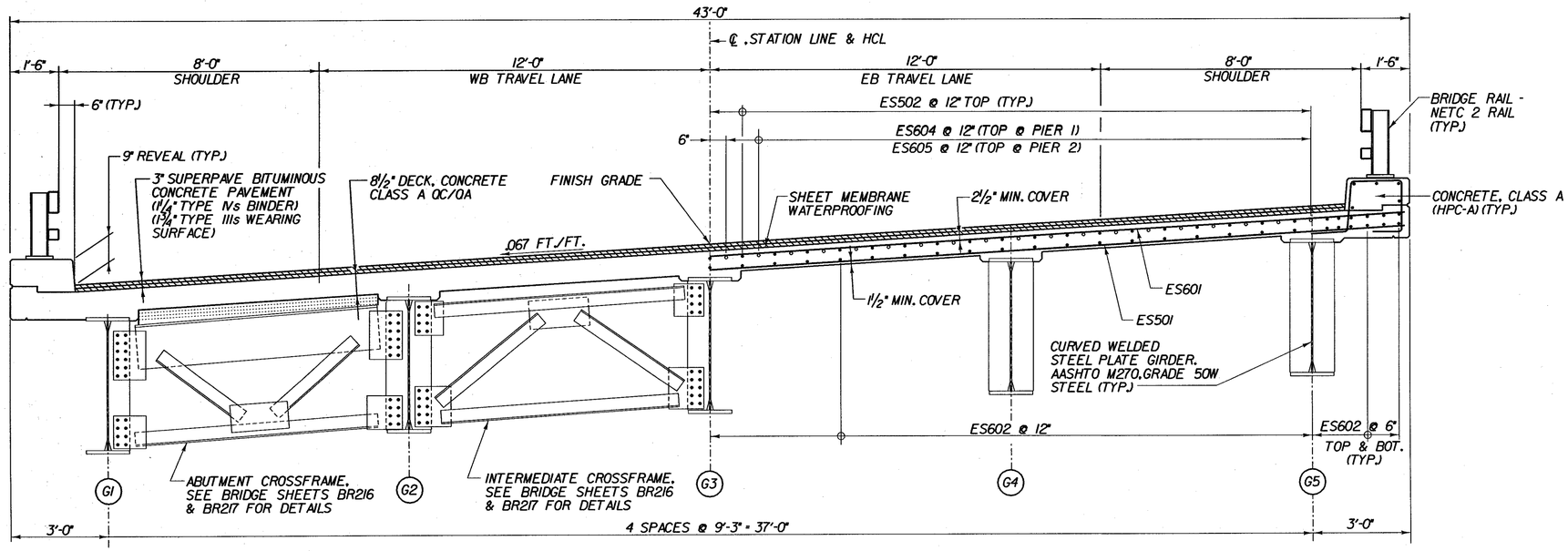

TRANSVERSE SECTION - BR 25

SCALE ½" = 1'-0

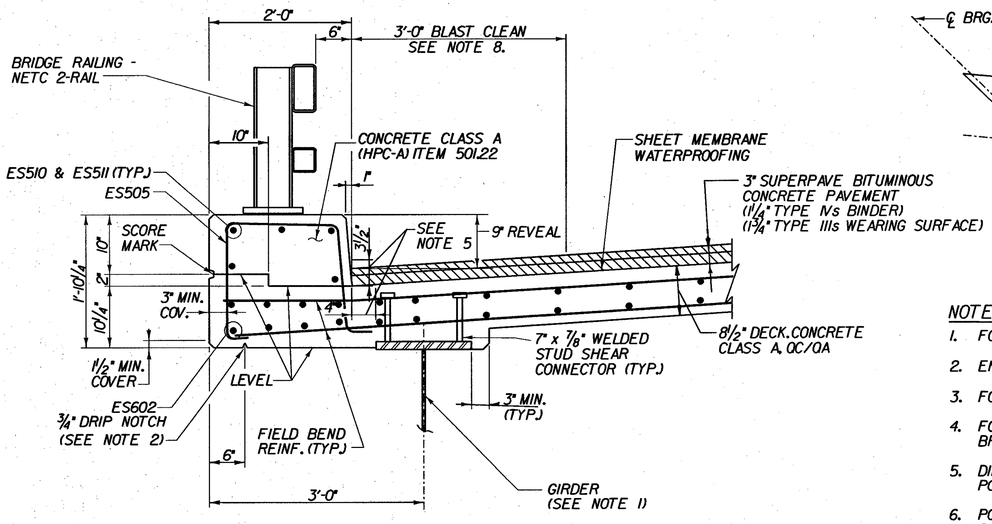

FASCIA DETAIL - BR 25

SCALE 1" = 1'-0

1 9 6 3 0 1 2

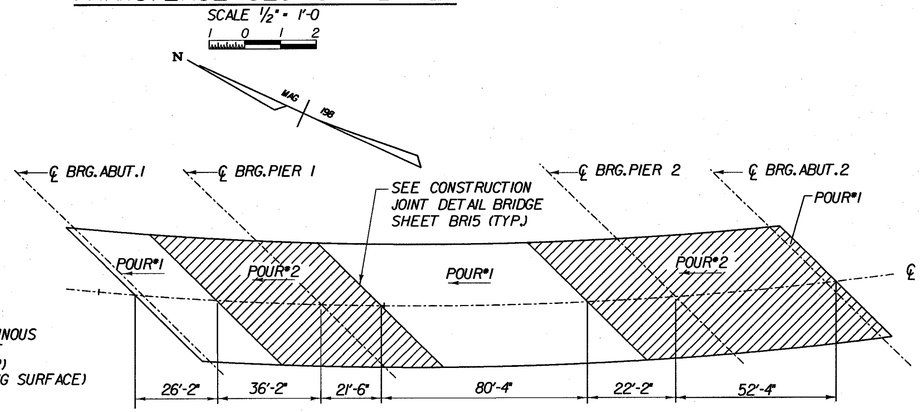

DECK POUR SEQUENCE - BR 25

NOTES:

1. FOR GIRDER SIZES SEE GIRDER ELEVATIONS BRIDGE SHEET BR212.
2. END DRIP NOTCH 3'-0" FROM FACE OF ABUTMENT AND OUTLET @ 45° TO FASCIA.
3. FOR DETAILS OF TRANSVERSE REINFORCEMENT, SEE DECK REINFORCEMENT PLANS, BRIDGE SHEETS BR208.
4. FOR DETAILS OF NETC BRIDGE RAIL AND APPROACH SECTION, SEE GUARD RAIL APPROACH SECTION, NETC 2 RAIL, BRIDGE SHEETS BR208, BR209, BR17, BR18 AND BR19.
5. DIMENSIONS SHOWN INDICATE AREA ALONG DECK AND UP FACE OF CURB FOR PLACEMENT OF 2 COATS OF POLYURETHANE MEMBRANE.
6. POLYURETHANE MEMBRANE AND BLAST CLEANING SHALL BE INCLUDED IN THE UNIT PRICE BID FOR SHEET MEMBRANE WATERPROOFING.
7. SHEET MEMBRANE WATERPROOFING SHALL EXTEND TO FACE OF CURB AS SHOWN IN DETAIL.
8. BLAST CLEAN 3'-0" FROM FACE OF CURB AND 3" UP CURB FACE PRIOR TO PLACING MEMBRANE.

DECK SLAB PLACEMENT NOTES

A. EACH CONCRETE DECK POUR SHALL BE PLACED CONTINUOUSLY WITHIN ONE EIGHT HOUR WORKING DAY. THERE SHALL BE A MINIMUM DELAY PERIOD OF 96 HOURS AFTER COMPLETION OF EACH POUR BEFORE BEGINNING ANOTHER POUR. INDIVIDUAL POUR NUMBERS AS SHOWN MAY BE COMBINED INTO A SINGLE POUR IF APPROVED BY THE VAOT STRUCTURES ENGINEER.

B. THE DECK CONCRETE SHALL BE RETARDED SUFFICIENTLY TO REMAIN PLASTIC UNTIL EACH POUR IS COMPLETE. THE QUANTITY OF RETARDANT SHALL BE APPROVED BY THE CONCRETE ENGINEER PRIOR TO PLACEMENT. ANY DEVIATIONS FROM THIS PROCEDURE MUST BE APPROVED BY THE VAOT STRUCTURES ENGINEER IN WRITING BEFORE THE POUR BEGINS.

C. ⟶ = DIRECTION OF POUR

STATE OF VERMONT
AGENCY OF TRANSPORTATION

Town Of SEARSBURG	Bridge No. 25
Highway No. VT. RTE. 9	Log Sta.
	Surv. Sta.

VT. RTE. 9 OVER DEERFIELD RIVER

TRANSVERSE SECTION - BR 25

Designed By D. VIENI	Drawn by K. DETRICK
Checked By M. OLSTAD Date 2/2002	Bridge Design Supervisor M. OLSTAD Date 2/2002
PROJECT SEARSBURG - WILMINGTON	PROJECT NO. NHF 010-K(8)
L.G.C. Info.	
Bridge Sheet No. BR207	Sheet 133 OF 435

CHA CLOUGH, HARBOUR & ASSOCIATES LLP
ENGINEERS, SURVEYORS, PLANNERS & LANDSCAPE ARCHITECTS
8 WINNERS CIRCLE ALBANY, NEW YORK, 12205

FILE NAME = u:\19755\MSTN\15_BR00225_25_tsec1.DGN
DATE/TIME = 02/28/02
USER = 2225

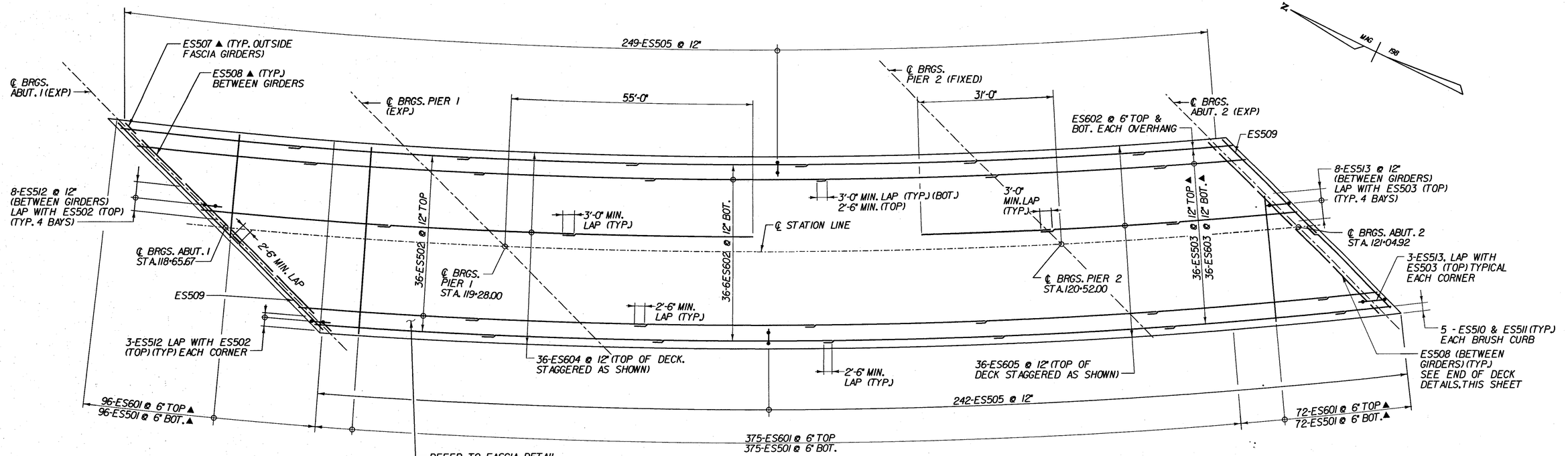

DECK REINFORCEMENT PLAN - BR 25

SCALE 3/32" = 1'-0

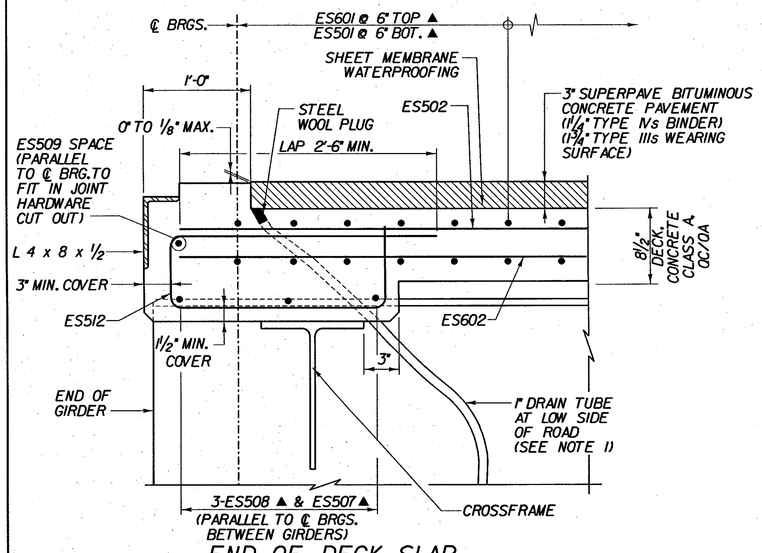

END OF DECK SLAB REINFORCEMENT DETAIL - ABUT. 1 (EXP. END)

SCALE 1½" = 1'-0

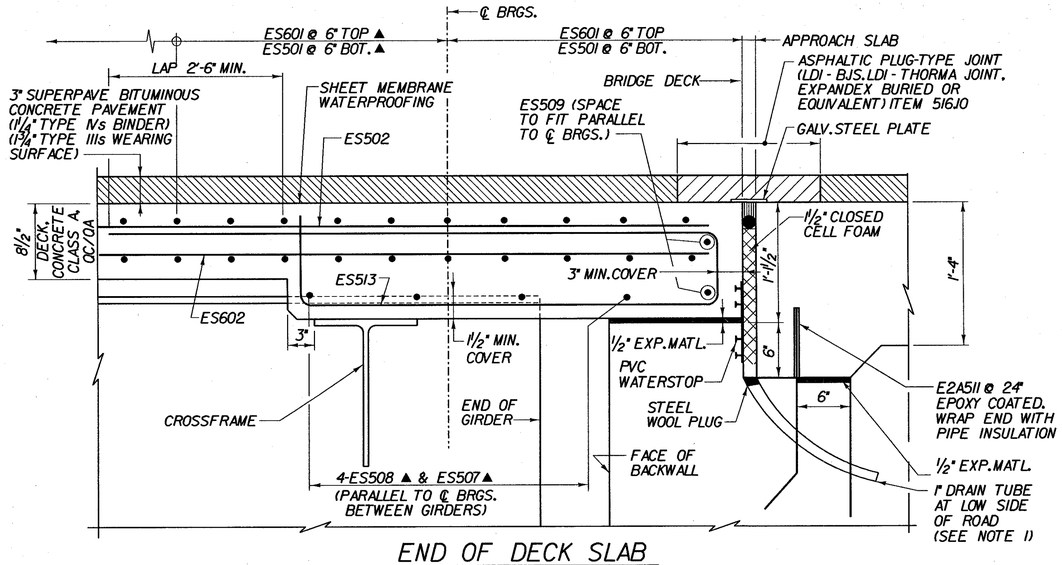

END OF DECK SLAB REINFORCEMENT DETAIL - ABUT. 2 (EXP. END)

SCALE 1½" = 1'-0

NOTE:

1. THE COST OF 1" DIA. PLASTIC DRAIN TUBE IS SUBSIDIARY TO ITEM 501.221 "CONCRETE, CLASS A, QC/QA. CARE SHALL BE TAKEN TO KEEP TUBE CLEAR DURING CONSTRUCTION. DRAIN TUBE SHALL CONFORM TO SUBSECTION 740.01.

KEY:

▲ - CUT TO FIT IN FIELD
3" CLR. UNLESS OTHERWISE SPECIFIED ON THE PLANS.

STATE OF VERMONT
AGENCY OF TRANSPORTATION

Town Of	SEARSBURG	Bridge No. 25	
Highway No.	VT. RTE. 9	Log Sta.	
		Surv. Sta.	

VT. RTE. 9 OVER DEERFIELD RIVER

DECK REINFORCEMENT PLAN - BR 25

Designed By D. VIENI	Drawn by K. DETRICK/Wm WEATHERBY
Checked By M. OLSTAD Date 2/2002	Bridge Design Supervisor M. OLSTAD Date 2/2002
PROJECT SEARSBURG - WILMINGTON	PROJECT NO. NHF 010-1(18)
I.G.C. Info.	
Bridge Sheet No. BR208	Sheet 134 OF 435

CHA CLOUGH, HARBOUR & ASSOCIATES LLP
ENGINEERS, SURVEYORS, PLANNERS & LANDSCAPE ARCHITECTS
11 WINNERS CIRCLE ALBANY, NEW YORK, 12205

FILE NAME = a:\9755\WS1\N15\BRDGDS25.dck..ref-pln.DGN
DATE/TIME = 02/28/02
USER = 2225

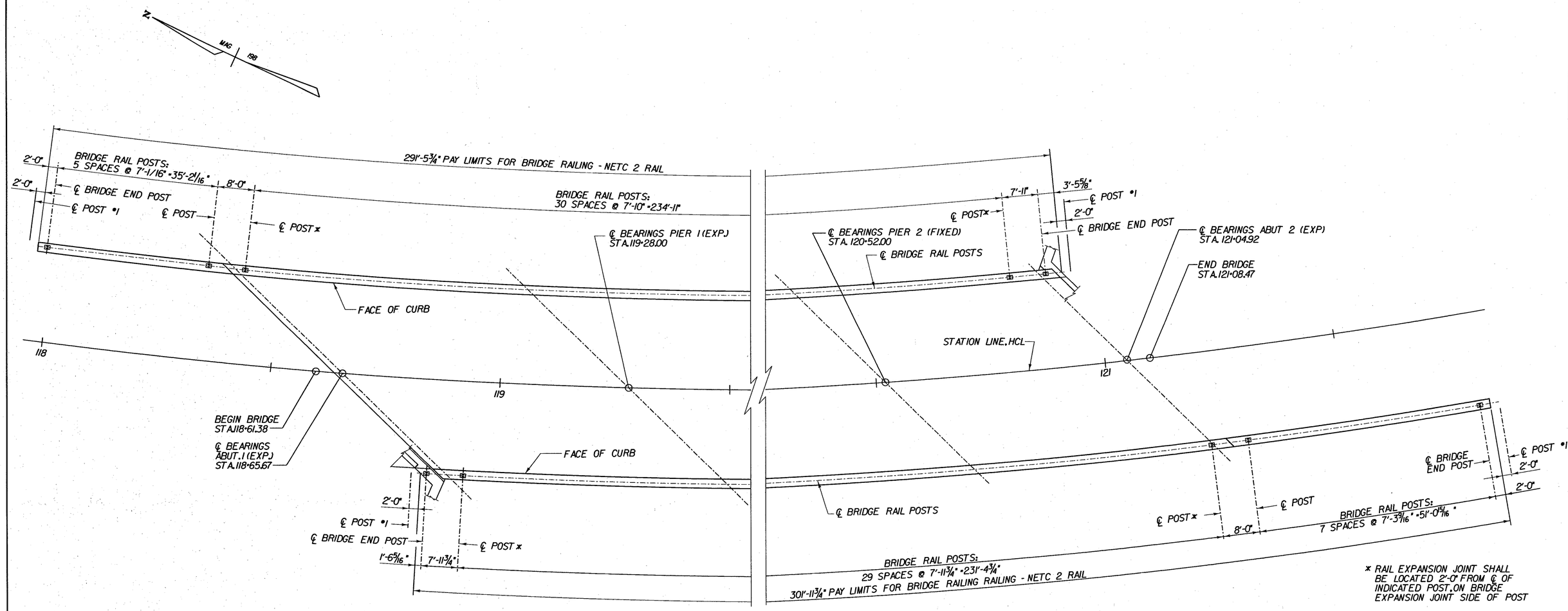

* RAIL EXPANSION JOINT SHALL BE LOCATED 2'-0" FROM ℄ OF INDICATED POST, ON BRIDGE EXPANSION JOINT SIDE OF POST

DECK RAILING PLAN - BR 25

SCALE 1" = 10'-0

10 0 10

NOTES:

1. THE 2'-0" CURB SHALL BE PLACED IN 15'-0" MAX. SECTIONS AS PER SHEET BRI5, CURB JOINT DETAILS. PLACEMENT DETAILS FOR THE CURB SHALL BE SUBMITTED TO THE BRIDGE RAILING FABRICATOR BY THE CONTRACTOR
2. FOR NETC 2-RAIL BRIDGE RAILING DETAILS AND INFORMATION SEE STANDARD SHEETS BRI7 AND BRI8, AND GUARD RAIL APPROACH SECTION, NETC 2 RAIL, BRIDGE SHEETS BRI9.
3. BRIDGE RAIL POSTS SHALL BE 1'-10" MINIMUM FROM CURB CONSTRUCTION JOINTS. (UNLESS OTHERWISE NOTED)
4. FOR BRIDGE RAILING DETAILS, SEE SHEET BRI7.
5. FOR APPROACH RAIL DETAILS, SEE SHEET BRI8.

STATE OF VERMONT
AGENCY OF TRANSPORTATION

Town Of SEARSBURG	Bridge No. 25
Highway No. VT. RTE. 9	Log Sta.
	Surv. Sta.

VT. RTE. 9 OVER DEERFIELD RIVER

DECK RAILING PLAN - BR 25

Designed By D. VIENI	Drawn by K. DETRICK
Checked By M. OLSTAD Date 2/2002	Bridge Design Supervisor M. OLSTAD Date 2/2002
PROJECT SEARSBURG - WILMINGTON	PROJECT NO. NHF 010-1(18)
I.G.C. Info.	
Bridge Sheet No. BR209	Sheet 135 OF 435

CLOUGH, HARBOUR & ASSOCIATES LLP
ENGINEERS, SURVEYORS, PLANNERS & LANDSCAPE ARCHITECTS
3 WINNERS CIRCLE ALBANY, NEW YORK, 12205

FILE NAME = c:\97565\MSTN\15\BRDG25\25_dek_rail.DGN
DATE/TIME = 02/28/02
USER = 22225

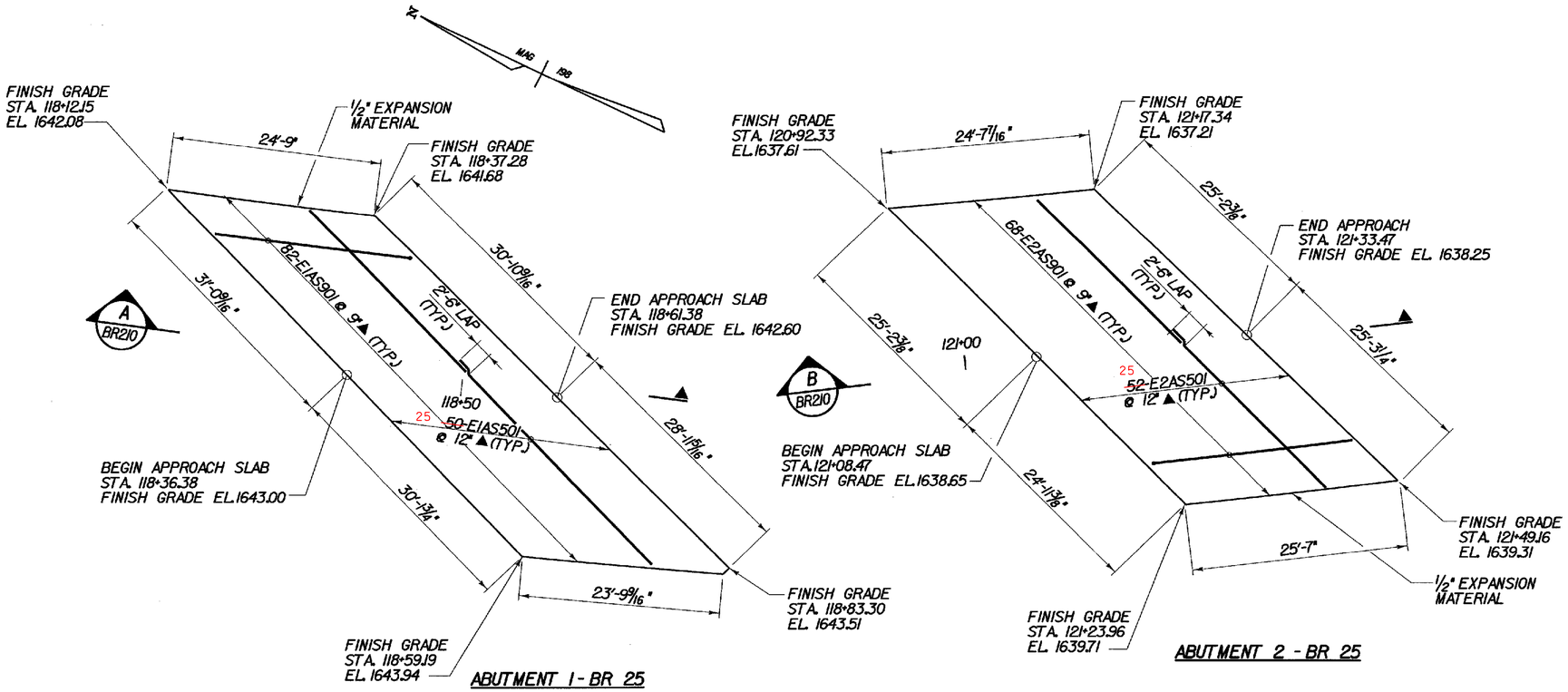

APPROACH SLAB PLANS

SCALE 1/8" = 1'-0

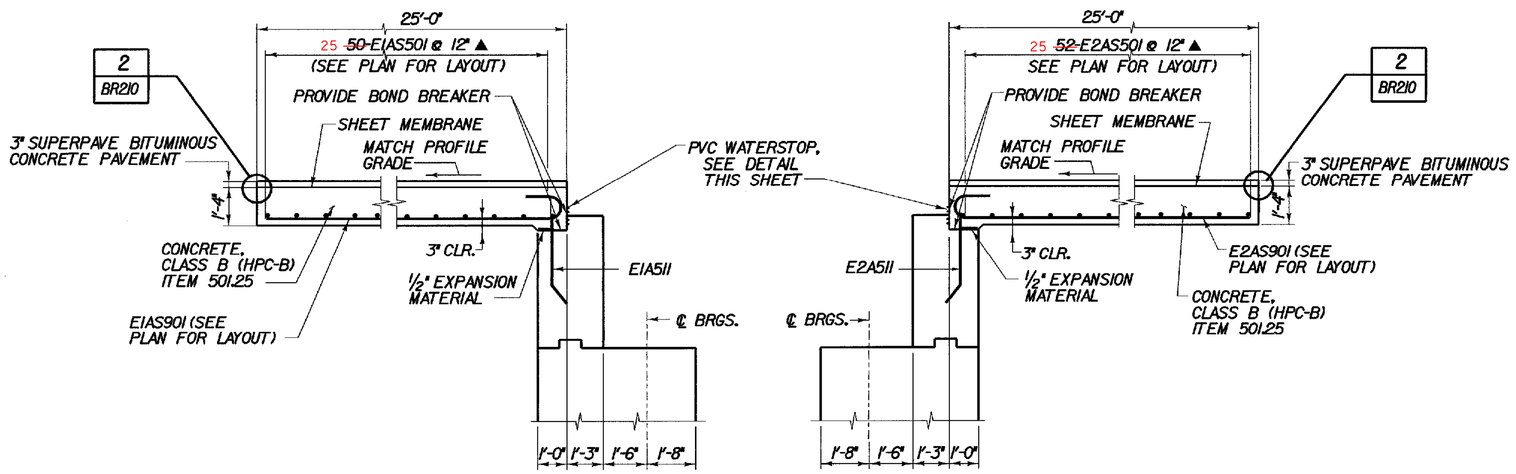

A BR210 APPROACH SLAB 1 SECTION

SCALE 3/8" = 1'-0

B BR210 APPROACH SLAB 2 SECTION

SCALE 3/8" = 1'-0

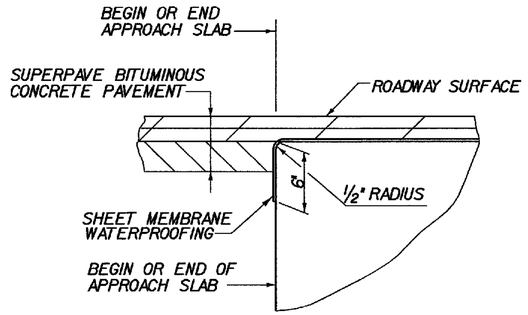

2 BR210 DETAIL FOR JOINT IN PAVEMENT AND SHEET MEMBRANE AT END OF BRIDGE

(NOT TO SCALE)

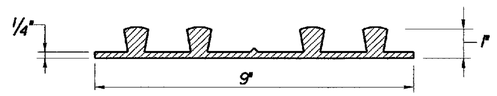

PVC WATERSTOP FOR CONSTRUCTION JOINTS

(NOT TO SCALE)

PER RE IGNORE SUBBASE TRANSITION AND RUN SUBBASE UP TO ABUTMENT 4'-0" FROM F.G. DOWN. NO SAND BEING USED, JUST SUBBASE.

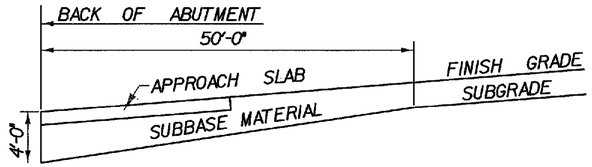

SUBBASE DETAIL AT ABUTMENTS

(ELEVATION IN CUT AND FILL)
(NOT TO SCALE)

KEY:

▲ DENOTES BARS TO BE CUT IN FIELD

NOTES:

1. THE COST FOR P.V.C. WATERSTOP SHALL BE INCLUDED IN THE UNIT PRICE BID FOR CONCRETE. OTHER CONFIGURATIONS MAY BE USED UPON APPROVAL OF THE STRUCTURES ENGINEER.
2. TILT HOOKED END OF BAR AS REQUIRED TO ACHIEVE MINIMUM COVER.

STATE OF VERMONT
AGENCY OF TRANSPORTATION

Town Of	SEARSBURG	Bridge No. 25
Highway No.	VT. RTE. 9	Log Sta. / Surv. Sta.
VT. RTE. 9 OVER DEERFIELD RIVER		
APPROACH SLAB DETAILS - BR 25		
Designed By D. VIENI		Drawn by K. DETRICK/Wm WEATHERBY
Checked By M. OLSTAD	Date 2/2002	Bridge Design Supervisor M. OLSTAD Date 2/2002
PROJECT SEARSBURG - WILMINGTON		PROJECT NO. NHF 010-1(18)
I.G.C. Info.		
Bridge Sheet No. BR210		Sheet 136 OF 435

CHA CLOUGH, HARBOUR & ASSOCIATES LLP
ENGINEERS, SURVEYORS, PLANNERS & LANDSCAPE ARCHITECTS
11 WINNERS CIRCLE ALBANY, NEW YORK, 12205

DATE/TIME = 26-FEB-2002
USER = rhmiscomb

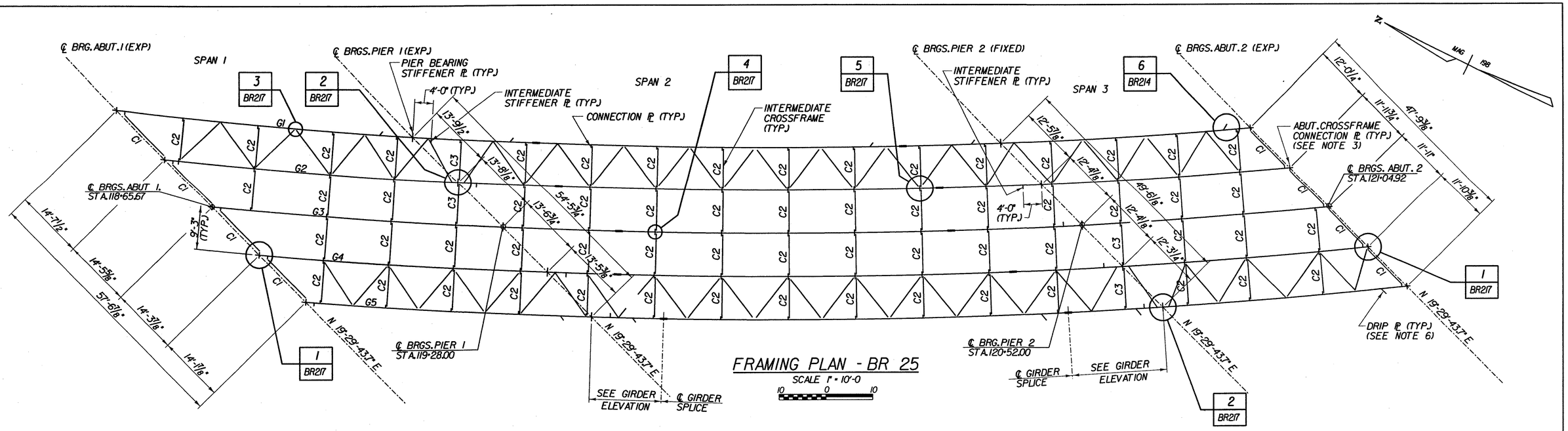

FRAMING PLAN - BR 25

SCALE 1" = 10'-0

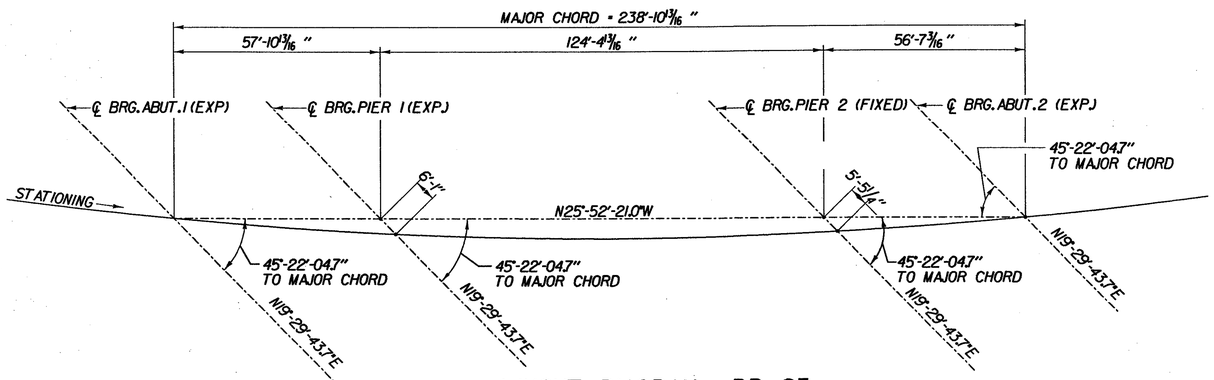

LAYOUT DIAGRAM - BR 25

(NOT TO SCALE)

NOTES:

1. FOR WELDED PLATE GIRDER, SEE DETAILS, BRIDGE SHEET BR212.
2. FOR FIELD SPLICE, SEE TYPICAL GIRDER SPLICE DETAILS, BRIDGE SHEET BR215 AND BR215A.
3. FOR CROSSFRAMES, SEE TYPICAL CROSSFRAME DETAILS, BRIDGE SHEETS BR216 AND BR217.
4. FOR CONNECTION PLATE DETAILS, SEE BRIDGE SHEET BR214.
5. GIRDER LAYOUT DIMENSIONS BEGIN AND END AT ABUTMENT CENTERLINES OF BEARING. LOCATIONS OF ABUTMENT CROSSFRAME CONNECTION PLATES NOT INCLUDED IN TABLE. THE CONTRACTOR SHALL PROVIDE THIS DIMENSION IN ACCORDANCE WITH DETAILS SHOWN IN TYPICAL PLATE GIRDER DETAILS. BRIDGE SHEETS BR212, BR214 AND BR216.
6. INTERMEDIATE TRANSVERSE STIFFENERS LOCATIONS NOT SHOWN IN TABLE. SEE FRAMING PLAN FOR LOACTION. SEE BRIDGE SHEET BR214 FOR SIZE.
7. FOR DRIP PLATE DETAIL, SEE GIRDER DETAILS, BRIDGE SHEET BR214.

BEARING STIFFENER AND CONNECTION PLATE SPACING 1/8":.

GRIDER NUMBER	GIRDER RADIUS	SIDE	SPAN 1 (ALONG ARC) BRG. STIFFENER/CONNECTION ℄ SPACING								SPAN 1 TOTAL
G1	1254.74'	LEFT	14'-3 9/16"	16'-1 1/8"	16'-1"	13'-7 13/16"	3'-5 1/4"				63'-6 3/4"
		RIGHT									
G2	1263.99'	LEFT	3'-0 5/16"	16'-2 9/16"	16'-2 7/16"	13'-9"	13'-8 7/8"				62'-11 3/16"
		RIGHT	3'-0 5/16"	16'-2 9/16"	16'-2 7/16"	13'-9"	13'-8 7/8"				
G3	1273.24'	LEFT		8'-2 1/2"	16'-3 7/16"	13'-10 3/16"	13'-10 1/8"	10'-5 5/16"			62'-3 15/16"
		RIGHT			24'-6 5/16"	13'-10 3/16"	13'-10 3/16"	10'-5 5/16"			
G4	1282.49'	LEFT			13'-8 3/4"	13'-11 3/8"	13'-11 5/16"	14'-3 5/16"	5'-9 11/16"		61'-9/16"
		RIGHT			13'-8 3/4"	13'-11 3/8"	13'-11 5/16"	14'-3 5/16"	5'-9 11/16"		
G5	1291.74'	LEFT			3'-0 1/2"	14'-0 5/8"	14'-0 1/2"	14'-5 3/16"	14'-5 3/16"	1'-2 9/16"	61'-2 1/2"
		RIGHT									

GRIDER NUMBER	SPAN 2 (ALONG ARC) BRG. STIFFENER/CONNECTION ℄ SPACING													SPAN 2 TOTAL
G1	10'-2 3/8"	14'-0 3/16"	14'-0 3/16"	14'-0 3/16"	14'-0 3/16"	14'-0 3/16"	14'-0 3/16"	14'-0 3/16"	14'-0 3/16"	14'-0 3/16"	3'-5 11/16"			125'-9 3/16"
G2		14'-1 7/16"	14'-1 7/16"	14'-1 7/16"	14'-1 7/16"	14'-1 7/16"	14'-1 7/16"	14'-1 7/16"	14'-1 7/16"	14'-1 7/16"	11'-11"			124'-10 11/16"
		14'-1 7/16"	14'-1 7/16"	14'-1 7/16"	14'-1 7/16"	14'-1 7/16"	14'-1 7/16"	14'-1 7/16"	14'-1 7/16"	14'-1 7/16"	11'-11"			
G3		4'-1 3/8"	14'-2 11/16"	14'-2 11/16"	14'-2 11/16"	14'-2 11/16"	14'-2 11/16"	14'-2 11/16"	14'-2 11/16"	14'-2 11/16"	14'-2 11/16"	6'-1"		124'-0"
		4'-1 3/8"	14'-2 11/16"	14'-2 11/16"	14'-2 11/16"	14'-2 11/16"	14'-2 11/16"	14'-2 11/16"	14'-2 11/16"	14'-2 11/16"	14'-2 11/16"	6'-1"		
G4			8'-6 1/4"	14'-3 5/16"	14'-3 5/16"	14'-3 5/16"	14'-3 5/16"	14'-3 5/16"	14'-3 5/16"	14'-3 5/16"	14'-3 5/16"	14'-3 5/16"		123'-1 3/16"
			8'-6 1/4"	14'-3 5/16"	14'-3 5/16"	14'-3 5/16"	14'-3 5/16"	14'-3 5/16"	14'-3 5/16"	14'-3 5/16"	14'-3 5/16"	14'-3 5/16"		
G5				13'-2 5/8"	14'-5 3/16"	14'-5 3/16"	14'-5 3/16"	14'-5 3/16"	14'-5 3/16"	14'-5 3/16"	14'-5 3/16"	14'-5 3/16"	8'-11/8"	122'-4 1/16"

GRIDER NUMBER	SPAN 3 (ALONG ARC) BRG. STIFFENER/CONNECTION ℄ SPACING						SPAN 3 TOTAL
G1	10'-6 1/2"	14'-0 3/16"	12'-11 5/8"	12'-11 1/2"	3'-0 1/8"		53'-6"
G2	2'-2 7/16"	14'-1 7/16"	13'-0 3/4"	13'-0 5/8"	10'-9/8"		53'-2 1/2"
	2'-2 7/16"	14'-1 7/16"	13'-0 3/4"	13'-0 5/8"	10'-9/8"		
G3		8'-11 1/16"	13'-1 5/16"	13'-1 3/16"	18'-5 5/8"		52'-11 1/16"
		8'-11 1/16"	13'-1 5/16"	13'-1 3/16"	15'-5 5/8"	3'-0"	
G4			13'-3 1/16"	13'-2 5/16"	15'-7"	10'-6 3/4"	52'-7 13/16"
			13'-3 1/16"	13'-2 5/16"	15'-7"	10'-6 3/4"	
G5			5'-3 1/8"	13'-4 1/16"	15'-8 5/16"	18'-1 1/16"	52'-4 9/16"

CROSSFRAME LAYOUT TABLE - BR 25

CHA CLOUGH, HARBOUR & ASSOCIATES LLP
ENGINEERS, SURVEYORS, PLANNERS & LANDSCAPE ARCHITECTS
11 WINNERS CIRCLE ALBANY, NEW YORK, 12205

STATE OF VERMONT
AGENCY OF TRANSPORTATION

Town Of SEARSBURG	Bridge No. 25
Highway No. VT. RTE. 9	Log Sta.
	Surv. Sta.

VT. RTE. 9 OVER DEERFIELD RIVER

FRAMING PLAN - BR 25

Designed By D. VIENI	Drawn by J.LAGONE/K. DETRICK
Checked By M. OLSTAD Date 12/2001	Bridge Design Supervisor M. OLSTAD Date 12/2001
PROJECT SEARSBURG - WILMINGTON	PROJECT NO. NHF 010-1(18)
I.G.C. Info.	
Bridge Sheet No. BR211	Sheet 137 OF 435

FILE NAME = u:\s1755\mastr\15\BRG025\25_frmplnplt
DATE/TIME = 12/13/2001
USER = 664

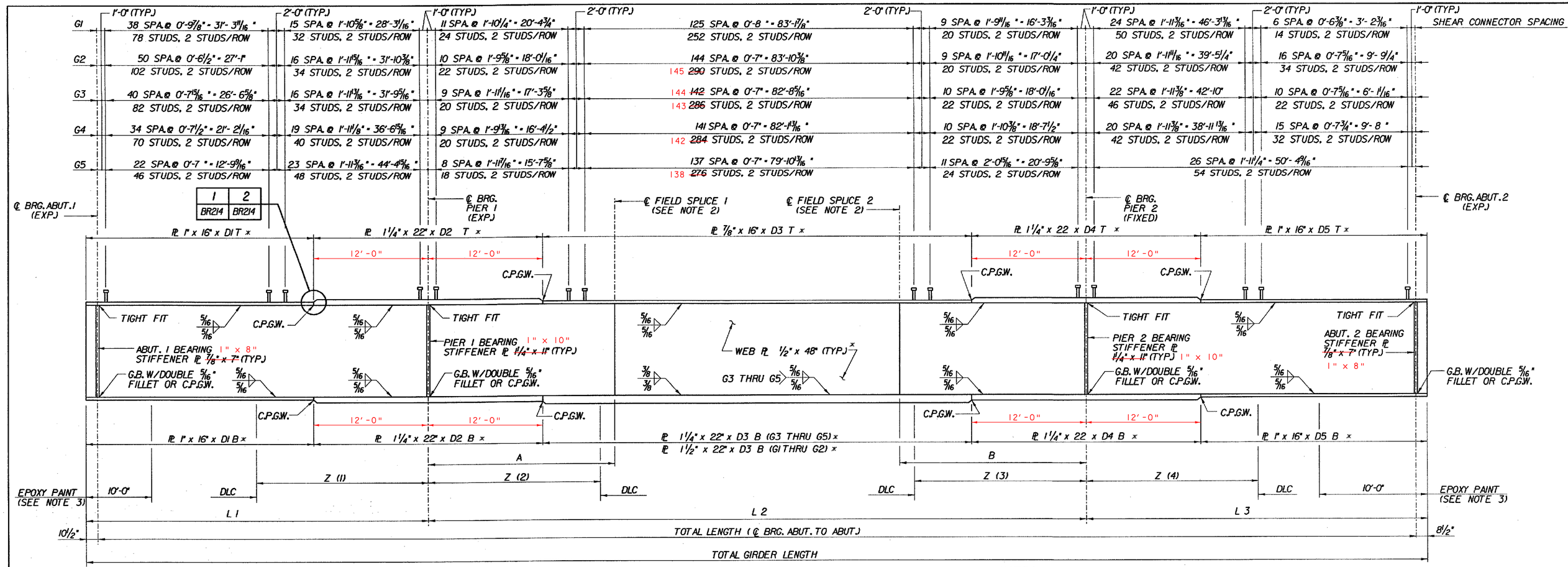

GIRDER ELEVATION - BR 25

(NOT TO SCALE)

* MEMBERS INDICATED SHALL BE CHARPY V-NOTCH (CVN) TESTED IN ACCORDANCE WITH SECTION 714.01 OF THE SPECIFICATION.

26'-5"

BR 25

GIRDER	RADIUS	SPAN LENGTHS (ALONG ARC) FT-IN			TOTAL LENGTH C.BRG. ABUT. TO ABUT.	TOTAL GIRDER LENGTH	GIRDER	SPLICE 1		SPLICE 2		POINT OF DEAD LOAD CONTRAFLECTURE			
		L 1	L 2	L 3				"A"	TYPE	"B"	TYPE	Z (1)	Z (2)	Z (3)	Z (4)
G1	1254.74'	64'-5 1/4"	125'-9 13/16"	54'-2 1/2"	242'-10 9/16"	244'-5 9/16"	G1	~~27'-1"~~	1	20'-11"	1	39'-11 1/16"	24'-8 3/4"	20'-7 3/16"	49'-3 13/16"
G2	1263.99'	63'-9 11/16"	124'- 10 11/16"	53'-11"	241'-0 3/8"	242'-7 3/8"	G2	21'-7"	2	21'-10"	1	35'-11 1/4"	22'-2 1/16"	21'-2 1/4"	42'-5 3/16"
G3	1273.24'	63'- 2 7/16"	124'- 0"	53'-7 9/16"	239'-3"	240'-10"	G3	24'-10"	1	28'-1"	2	36'-1 5/16"	21'-5 5/8"	22'-2 1/16"	45'-9 3/16"
G4	1282.49'	62'-7 1/2"	123'- 1 3/16"	53'- 4 5/16"	237'-6 5/8"	239'-1 5/16"	G4	15'-0"	3	23'-6"	2	40'-9 5/16"	20'-6 1/2"	22'-9 1/2"	41'-11 5/16"
G5	1291.74'	62'-1"	122'- 4 1/16"	53'- 1 1/16"	235'-11 1/8"	237'-6 1/8"	G5	15'-5"	1	20'-3"	1	48'-6 5/16"	19'-9 5/8"	24'-11 5/8"	52'-4 3/16"

GIRDER	TOP FLANGE SECTION LENGTHS (ALONG ARC)					BOTTOM FLANGE SECTION LENGTHS (ALONG ARC)				
	D1 T	D2 T	D3 T	D4 T	D5 T	D1 B	D2 B	D3 B	D4 B	D5 B
G1	52'-5 1/4"	24'-0"	101'-9 13/16"	24'-0"	42'-2 1/2"	52'-5 1/4"	~~36'-11 3/16"~~	~~76'-2 1/4"~~	~~37'-4 5/16"~~	42'-2 1/2"
G2	51'-9 11/16"	24'-0"	100'-11 11/16"	24'-0"	41-11"	51'-9 11/16"	~~36'-2 5/16"~~	~~75'-8 11/16"~~	~~36'-11 3/16"~~	41'-11"
G3	51'- 2 7/16"	24'-0"	100'-0"	24'-0"	41'-7 9/16"	51'- 2 7/16"	-	148'-0"	-	41'-7 9/16"
G4	50'- 7 1/2"	24'-0"	99'-1 13/16"	24'-0"	41'-4 5/16"	50'- 7 1/2"	-	147'-1 3/16"	-	41'-4 5/16"
G5	50'-1"	24'-0"	98'-4 1/16"	24'-0"	41'-1 1/16"	50'-1"	-	146'-4 1/16"	-	41'-1 1/16"

24'-0" 101'-9 13/16" 24'-0"

24'-0" 100'-11 11/16" 24'-0"

NOTES:

1. ALL STRUCTURAL STEEL SHALL BE AASHTO M270 GR 50W UNLESS OTHERWISE NOTED.
2. FOR FIELD SPLICE DETAILS, SEE TYPICAL GIRDER SPLICE DETAILS, BRIDGE SHEET BR215 ~~AND BR215A~~.
3. ALL STRUCTURAL STEEL WITHIN 10 FEET OF END OF GIRDER SHALL BE COATED WITH A PROTECTIVE PAINT SYSTEM, WITH THE FINAL COAT TO BE DARK BROWN (COLOR CHIP #20059) TO BLEND WITH THE WEATHERING STEEL. THE COST OF PAINTING SHALL BE PAID UNDER ITEM 513.25, "STRUCTURAL PAINTING SHOP APPLIED" IN ADDITION A GREASE COATING SHALL BE APPLIED TO PAINTED AREAS. THE COLOR SHALL MATCH THE COLOR OF THE PAINT COAT AS PER SUPPLEMENTARY SPECIFICATION 513.06
4. ALL BEARING STIFFENER PLATES SHALL BE VERTICAL IN THEIR FINAL ERECTED POSITION.
5. ENDS OF GIRDERS SHALL BE FABRICATED SO THAT THE ENDS WILL BE VERTICAL UNDER FULL DEAD LOAD.
6. IN AREAS OF UNPAINTED STEEL, CONTACT SURFACES OF BOLTED CONNECTIONS SHALL BE BLAST CLEANED IF RUSTED BEFORE CONNECTION IS MADE. IN AREAS OF PAINTED STEEL, PRIMER SHALL REMAIN ON THE SURFACES OF STEEL CONNECTION CONTACTS.
7. FOR CROSSFRAME DETAILS, SEE SHEET BR216 ~~AND BR217~~.
8. TOP OF STUDS SHALL EXTEND ABOVE BOTTOM LAYER OF DECK REINFORCEMENT.
9. BUTT WELDED FLANGE PLATES SHALL BE OFFSET 5'-0" FROM BUTT WELDED WEB PLATES.
10. ~~NUMBER OF STUDS SPECIFIED, ACTUAL SPACING VARIES ± 1/4".~~

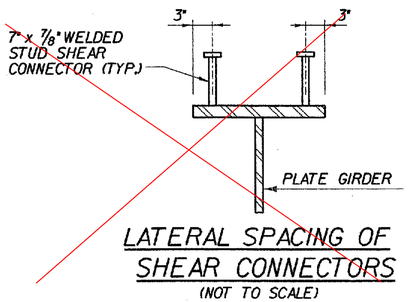

LATERAL SPACING OF SHEAR CONNECTORS

(NOT TO SCALE)

STATE OF VERMONT
AGENCY OF TRANSPORTATION

Town Of SEARSBURG	Bridge No. 25
Highway No. VT. RTE. 9	Log Sta.
	Surv. Sta.

VT. RTE. 9 OVER DEERFIELD RIVER

GIRDER ELEVATION - BR 25

Designed By D. VIENI	Drawn by K. DETRICK/J. LAGONE
Checked By M. OLSTAD Date 12/2001	Bridge Design Supervisor M. OLSTAD Date 12/2001
PROJECT SEARSBURG - WILMINGTON	PROJECT NO. NHF 010-1(18)
LG.C. Info.	
Bridge Sheet No. BR212	Sheet 138 OF 435

CHA CLOUGH, HARBOUR & ASSOCIATES LLP
ENGINEERS, SURVEYORS, PLANNERS & LANDSCAPE ARCHITECTS
8 WINNERS CIRCLE ALBANY, NEW YORK 12205

FILE NAME = u:\9755\MSTN\15\BRDG25\25_strelev.plt
DATE/TIME = 12/18/01
USER = SG4

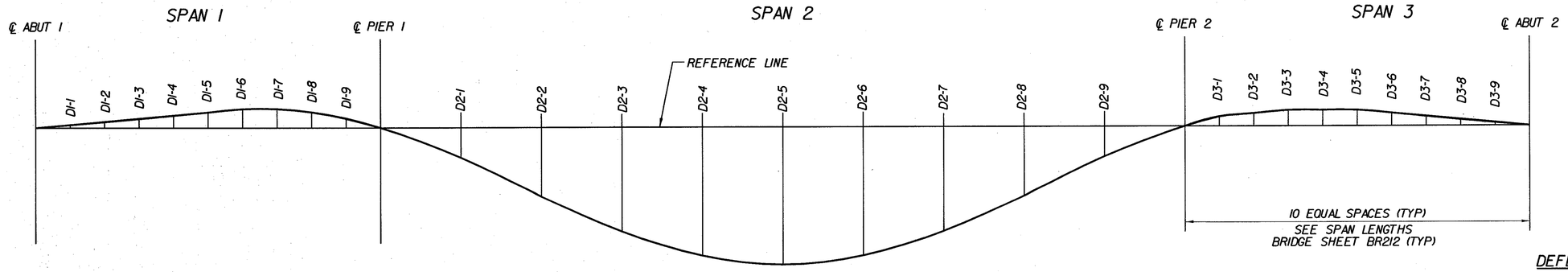

DEAD LOAD DEFLECTION DIAGRAM - BR 25

DEFLECTION NOTES:

1. DEAD LOAD DEFLECTIONS AS SHOWN INCLUDES STEEL, DECK CONCRETE, CURB, RAILING AND WEARING SURFACE.
2. DEFLECTIONS ARE TABULATED IN INCHES.

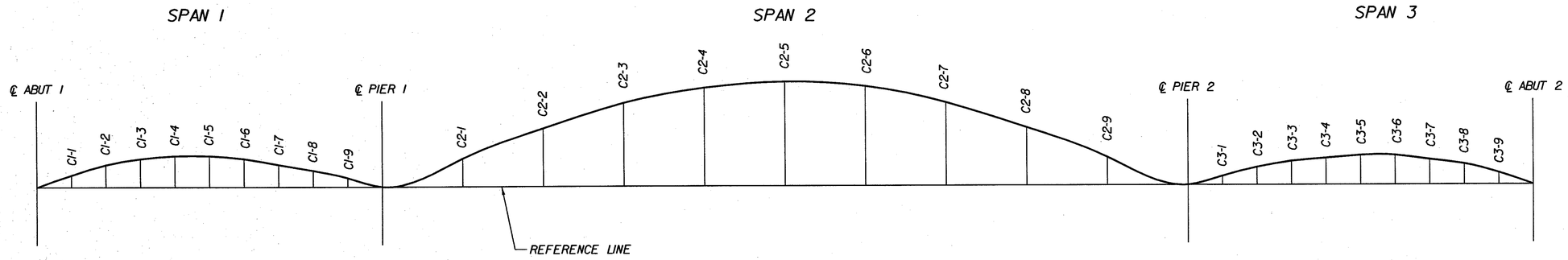

CAMBER DIAGRAM - BR 25

CAMBER NOTES:

1. CAMBERS ARE TABULATED IN INCHES
2. THE TOTAL CAMBER IS THE SUM OF STEEL DEAD LOAD, CONCRETE DEAD LOAD, SUPERIMPOSED DEAD LOAD AND RESIDUAL CAMBER. ALL CAMBER OFFSETS ARE MEASURED VERTICALLY TO THE TOP OF WEB FROM A STRAIGHT REFERENCE LINE DRAWN FROM THE INTERSECTION OF TOP OF WEB AND CENTERLINE OF BEARINGS AT ONE END OF GIRDER TO THE CORRESPONDING POINT AT THE OTHER END OF THE GIRDER.
3. POSITIVE NUMBERS IN THE TABLE ARE ABOVE THE STRAIGHT REFERENCE LINE.
4. NEGATIVE NUMBERS IN THE TABLE ARE BELOW THE STRAIGHT REFERENCE LINE.

DEAD LOAD DEFLECTIONS - BR 25

GIRDER	℄ ABUT. 1	D1-1	D1-2	D1-3	D1-4	D1-5	D1-6	D1-7	D1-8	D1-9	℄ PIER 1	D2-1	D2-2	D2-3	D2-4	D2-5	D2-6	D2-7	D2-8	D2-9	℄ PIER 2	D3-1	D3-2	D3-3	D3-4	D3-5	D3-6	D3-7	D3-8	D3-9	℄ ABUT. 2
G1	0"	0"	0 1/16"	0 1/16"	0 1/8"	0 3/16"	0 3/16"	0 1/4"	0 1/4"	0 3/16"	0"	-0 9/16"	-1 1/16"	-2 1/8"	-2 3/4"	-3"	-2 7/8"	-2 3/8"	-1 5/8"	-0 3/4"	0"	0 3/16"	0 3/8"	0 7/16"	0 7/16"	0 7/16"	0 3/8"	0 1/4"	0 3/16"	0 1/8"	0"
G2	0"	0"	0 1/16"	0 1/16"	0 1/8"	0 3/16"	0 1/4"	0 1/4"	0 1/4"	0 3/16"	0"	-0 5/8"	-1 3/8"	-2 1/8"	-2 11/16"	-2 7/8"	-2 11/16"	-2 1/4"	-1 1/2"	-0 11/16"	0"	0 3/16"	0 5/16"	0 3/8"	0 3/8"	0 3/8"	0 5/16"	0 1/4"	0 1/8"	0 1/16"	0"
G3	0"	0"	0 1/16"	0 1/8"	0 3/16"	0 1/4"	0 5/16"	0 5/16"	0 5/16"	0 3/16"	0"	-0 5/8"	-1 7/16"	-2 3/16"	-2 11/16"	-2 7/8"	-2 11/16"	-2 3/16"	-1 7/16"	-0 5/8"	0"	0 3/16"	0 1/4"	0 5/16"	0 5/16"	0 5/16"	0 1/4"	0 3/16"	0 1/8"	0 1/16"	0"
G4	0"	0 1/16"	0 1/8"	0 3/16"	0 1/4"	0 5/16"	0 3/8"	0 3/8"	0 5/16"	0 3/16"	0"	-0 11/16"	-1 1/2"	-2 1/4"	-2 3/4"	-2 15/16"	-2 3/4"	-2 1/4"	-1 7/16"	-0 5/8"	0"	0 3/16"	0 1/4"	0 5/16"	0 5/16"	0 5/16"	0 1/4"	0 3/16"	0 1/8"	0 1/16"	0"
G5	0"	0 1/8"	0 3/16"	0 5/16"	0 3/8"	0 1/2"	0 1/2"	0 1/2"	0 7/16"	0 1/4"	0"	-0 3/4"	-1 1/16"	-2 1/2"	-3 1/16"	-3 3/16"	-2 7/8"	-2 5/16"	-1 1/2"	-0 5/8"	0"	0 3/16"	0 1/4"	0 5/16"	0 3/8"	0 5/16"	0 5/16"	0 3/16"	0 1/8"	0 1/16"	0"

TOTAL CAMBER - BR 25

GIRDER	℄ ABUT. 1	C1-1	C1-2	C1-3	C1-4	C1-5	C1-6	C1-7	C1-8	C1-9	℄ PIER 1	C2-1	C2-2	C2-3	C2-4	C2-5	C2-6	C2-7	C2-8	C2-9	℄ PIER 2	C3-1	C3-2	C3-3	C3-4	C3-5	C3-6	C3-7	C3-8	C3-9	℄ ABUT. 2
G1	0"	0 3/8"	0 5/8"	0 3/4"	0 13/16"	0 15/16"	0 3/4"	0 9/16"	0 3/8"	0 3/16"	0"	1 1/8"	2 3/8"	3 1/2"	4 1/4"	4 9/16"	4 3/8"	3 11/16"	2 5/8"	1 5/16"	0"	0 3/16"	0 5/16"	0 7/16"	0 1/2"	0 9/16"	0 9/16"	0 9/16"	0 7/16"	0 1/4"	0"
G2	0"	0 5/16"	0 9/16"	0 3/4"	0 13/16"	0 15/16"	0 3/4"	0 9/16"	0 3/8"	0 3/16"	0"	1 3/16"	2 3/8"	3 1/16"	4 3/16"	4 1/16"	4 3/16"	3 9/16"	2 1/2"	1 1/4"	0"	0 3/16"	0 3/8"	0 1/2"	0 9/16"	0 5/8"	0 11/16"	0 5/8"	0 1/2"	0 5/16"	0"
G3	0"	0 5/16"	0 9/16"	0 11/16"	0 13/16"	0 15/16"	0 3/4"	0 11/16"	0 9/16"	0 3/8"	0 3/16"	0"	1 3/16"	2 1/16"	3 1/16"	4 1/8"	4 3/8"	4 3/16"	3 1/2"	2 1/16"	1 3/16"	0"	0 3/16"	0 3/8"	0 1/2"	0 5/8"	0 11/16"	0 11/16"	0 5/8"	0 1/2"	0 5/16"	0"
G4	0"	0 5/16"	0 1/2"	0 5/8"	0 11/16"	0 11/16"	0 5/8"	0 7/16"	0 5/16"	0 1/8"	0"	1 1/4"	2 1/2"	3 9/16"	4 1/4"	4 1/2"	4 1/4"	3 1/2"	2 1/16"	1 3/16"	0"	0 3/16"	0 3/8"	0 1/2"	0 5/8"	0 11/16"	0 11/16"	0 5/8"	0 1/2"	0 5/16"	0"
G5	0"	0 1/4"	0 7/16"	0 9/16"	0 9/16"	0 1/2"	0 7/16"	0 5/16"	0 3/16"	0 1/8"	0"	1 5/16"	2 11/16"	3 13/16"	4 1/2"	4 11/16"	4 3/8"	3 9/16"	2 1/16"	1 3/16"	0"	0 3/16"	0 3/8"	0 1/2"	0 5/8"	0 11/16"	0 11/16"	0 5/8"	0 1/2"	0 1/4"	0"

CLOUGH, HARBOUR & ASSOCIATES LLP
ENGINEERS, SURVEYORS, PLANNERS & LANDSCAPE ARCHITECTS
11 WINNERS CIRCLE ALBANY, NEW YORK, 12205

STATE OF VERMONT
AGENCY OF TRANSPORTATION

Town Of SEARSBURG	Bridge No. 25
Highway No. VT. RTE. 9	Log Sta.
	Surv. Sta.

VT. RTE. 9 OVER DEERFIELD RIVER

CAMBER & DEAD LOAD DEFLECTION - BR 25

Designed By D. VIENI	Drawn by K. DETRICK
Checked By M. OLSTAD Date 2/2002	Bridge Design Supervisor M. OLSTAD Date 2/2002
PROJECT SEARSBURG - WILMINGTON	PROJECT NO. NHF 010-1(18)
I.G.C. Info.	
Bridge Sheet No. BR213	Sheet 139 OF 435

FILE NAME = u:\1755\MSTN\15\BR00225\25_camber.DGN
DATE/TIME = 2/28/02
USER = 22225

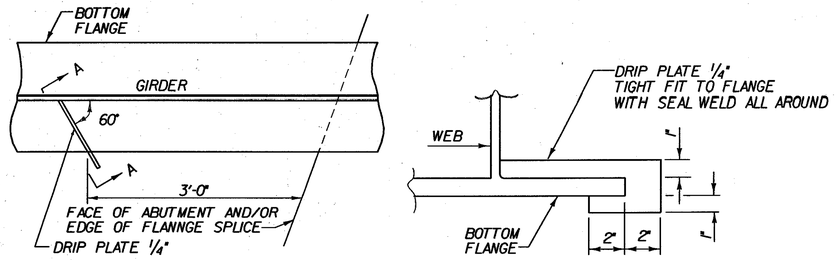

6 BR211 PLAN - DRIP PLATE SECTION A-A

NOTE: DRIP PLATES SHALL BE PLACED ON OUTSIDE EDGE OF FASCIA GIRDERS ON THE HIGH SIDE OF ALL PIERS, SPLICES AND ABUTMENTS OR AS INDICATED ON PROJECT PLANS.

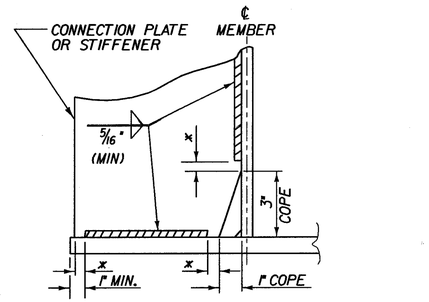

* NO WELD FOR 1/4" MIN. 1/2" MAX. (EXCEPT MUST MAINTAIN 1" MINIMUM FROM EDGE OF FLANGE)

WELD TERMINATION AND COPING DETAILS FOR STEEL MEMBERS
(NOT TO SCALE)

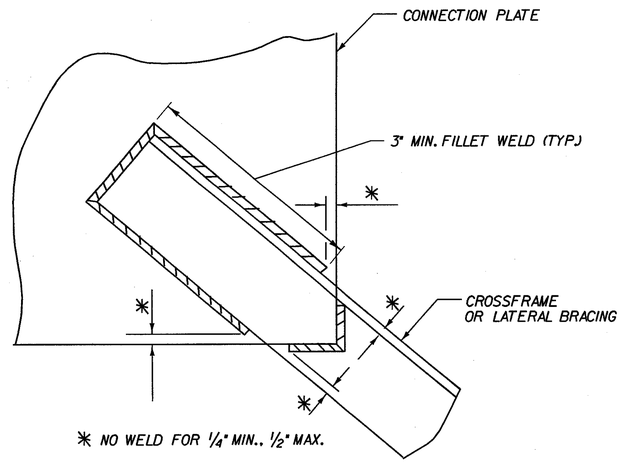

* NO WELD FOR 1/4" MIN., 1/2" MAX.

WELD LOCATION DETAIL AT CROSSFRAMES AND LATERAL BRACING
(NOT TO SCALE)

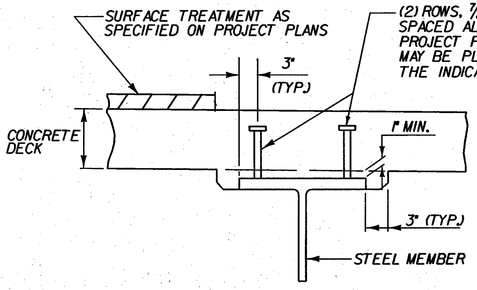

HAUNCH AND SHEAR CONNECTOR DETAILS
(NOT TO SCALE)

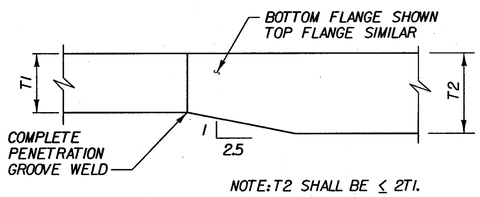

NOTE: T2 SHALL BE ≤ 2T1.

1 BR212 FLANGE THICKNESS TAPER
(NOT TO SCALE)

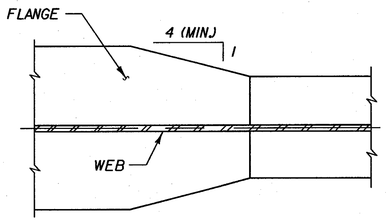

2 BR212 FLANGE WIDTH TAPER
(NOT TO SCALE)

NOTE:
1. FOR CONNECTION PLATE AND/OR STIFFENER PLATE SIZE AND LOCATION, SEE DWG. BR216.

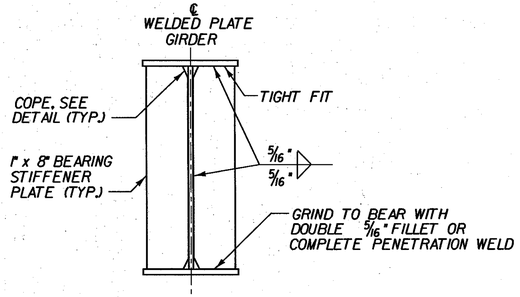

ABUTMENT BEARING STIFFENERS FOR WELDED PLATE GIRDERS
(NOT TO SCALE)

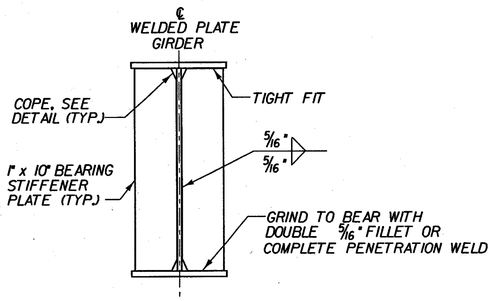

PIER BEARING STIFFENERS FOR WELDED PLATE GIRDERS
(NOT TO SCALE)

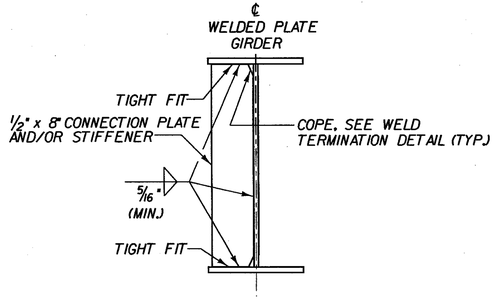

INTERMEDIATE CONNECTION PLATES AND/OR STIFFENERS FOR WELDED PLATE GIRDERS
(NOT TO SCALE)

FILE NAME = d:\VTSTN\BR00025\25_data.DGN
DATE/TIME = 2/26/02
USER = 2225

STATE OF VERMONT
AGENCY OF TRANSPORTATION

Town Of	SEARSBURG	Bridge No. 25	
Highway No.	VT. RTE. 9	Log Sta.	
		Surv. Sta.	

VT. RTE. 9 OVER DEERFIELD RIVER

GIRDER DETAILS - BR 25

Designed By D. VIENI		Drawn by K. DETRICK	
Checked By M. OLSTAD	Date 2/2002	Bridge Design Supervisor M. OLSTAD	Date 2/2002
PROJECT SEARSBURG - WILMINGTON		PROJECT NO. NHF 010-1(18)	
I.G.C. Info.			
Bridge Sheet No. BR214		Sheet 140 OF 435	

CHA CLOUGH, HARBOUR & ASSOCIATES LLP
ENGINEERS, SURVEYORS, PLANNERS & LANDSCAPE ARCHITECTS
11 WINNERS CIRCLE ALBANY, NEW YORK, 12205

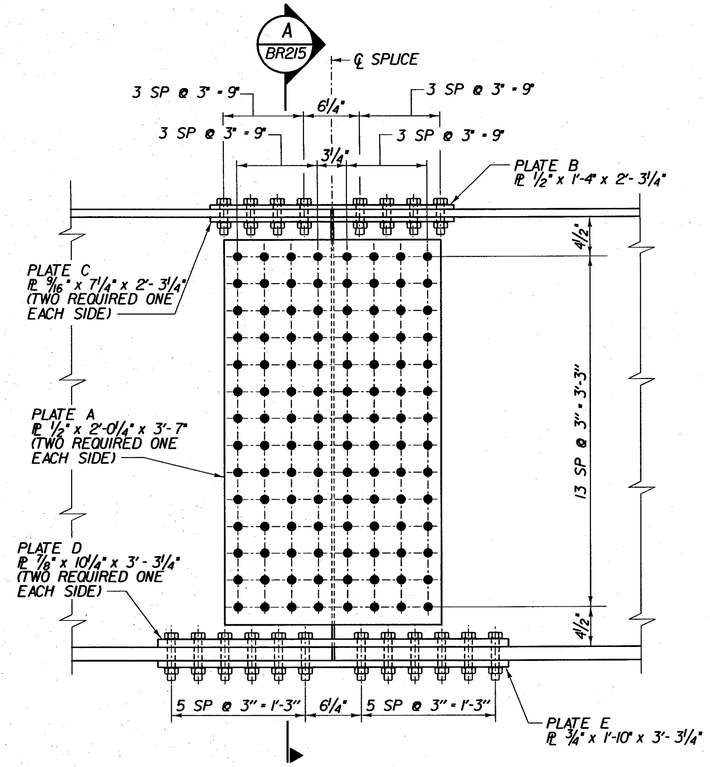

TYPE I GIRDER SPLICE ELEVATION BR 25

SCALE 1½" = 1'-0

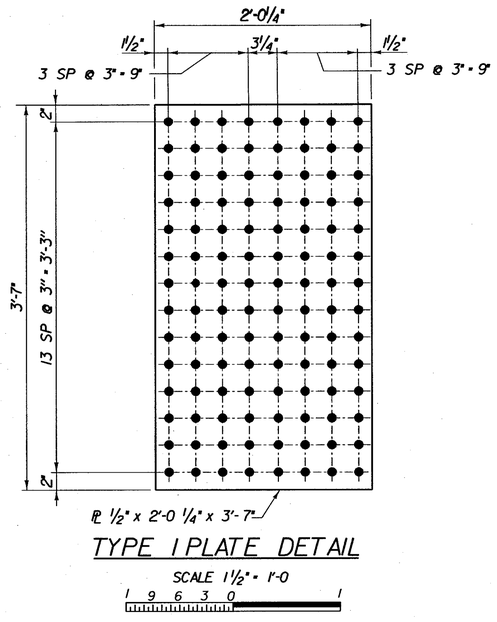

TYPE I PLATE DETAIL

SCALE 1½" = 1'-0

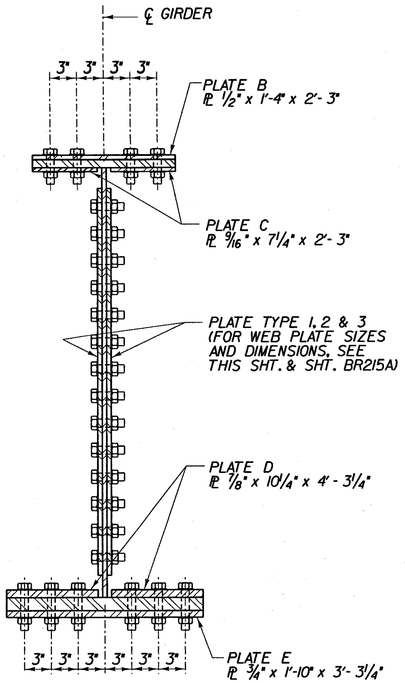

A BR215 TYPICAL GIRDER SPLICE SECTION - BR 25

SCALE 1½" = 1'-0

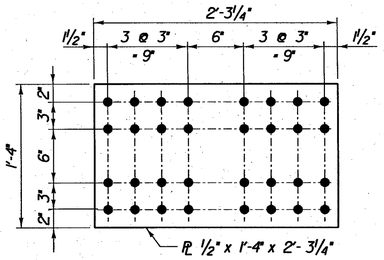

DETAIL - PLATE B

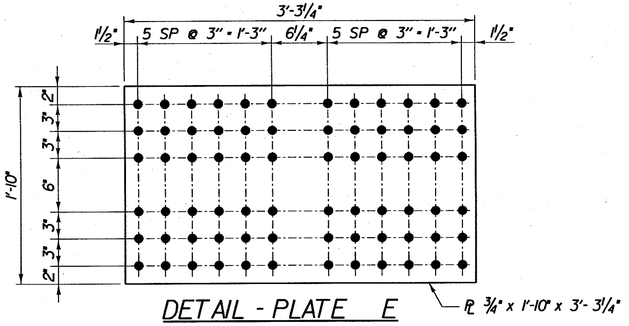

DETAIL - PLATE E

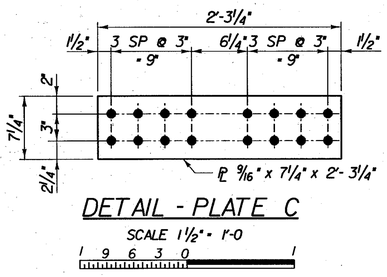

DETAIL - PLATE C

SCALE 1½" = 1'-0

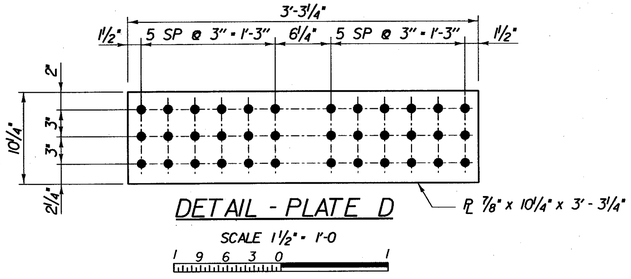

DETAIL - PLATE D

SCALE 1½" = 1'-0

FIELD SPLICE NOTES:

1. FOR LOCATION AND TYPE OF GIRDER SPLICES SEE BR212.
2. ALL BOLTS SHALL BE A325 BOLTS AND SHALL CONFORM TO THE REQUIREMENTS OF AASHTO M164.
3. ALL SPLICE PLATES AND FILLER PLATES SHALL CONFORM TO THE REQUIREMENTS OF AASHTO M270 GRADE 50W STEEL.
4. NUTS TO BE ON INSIDE FACE OF WEB SPLICE AT FASCIA GIRDERS.
5. NUTS TO BE DOWN ON ALL FLANGE SPLICES.
6. COST OF FIELD SPLICES TO BE INCLUDED IN THE PRICE BID FOR ITEM 506.55.
7. BOLTED CONNECTIONS SHALL HAVE THREADS EXCLUDED FROM THE SHEAR PLANES.
8. CONTACT SURFACES OF BOLTED PARTS SHALL BE CLASS B (SLIP COEF. 0.50).
9. ALL SPLICE PLATES TO BE C.V.N. TESTED.

STATE OF VERMONT
AGENCY OF TRANSPORTATION

Town Of	SEARSBURG	Bridge No. 25	
Highway No.	VT. RTE. 9	Log Sta.	
		Surv. Sta.	

VT. RTE. 9 OVER DEERFIELD RIVER

GIRDER SPLICE DETAILS (I) BR 25

Designed By D. VIENI		Drawn by J. LAGONE/Wm. WEATHERBY	
Checked By M. OLSTAD	Date 2/2002	Bridge Design Supervisor M. OLSTAD	Date 2/2002
PROJECT SEARSBURG - WILMINGTON		PROJECT NO. NHF 010-1(18)	
I.G.C. Info.			
Bridge Sheet No. BR215		Sheet 141 OF 435	

CHA CLOUGH, HARBOUR & ASSOCIATES LLP
ENGINEERS, SURVEYORS, PLANNERS & LANDSCAPE ARCHITECTS
WINNERS CIRCLE ALBANY, NEW YORK, 12205

FILE NAME =u:\9755\MSTN\15\BRDG25\25_splice1s.DGN
DATE/TIME = 02/20/02
USER = 2223

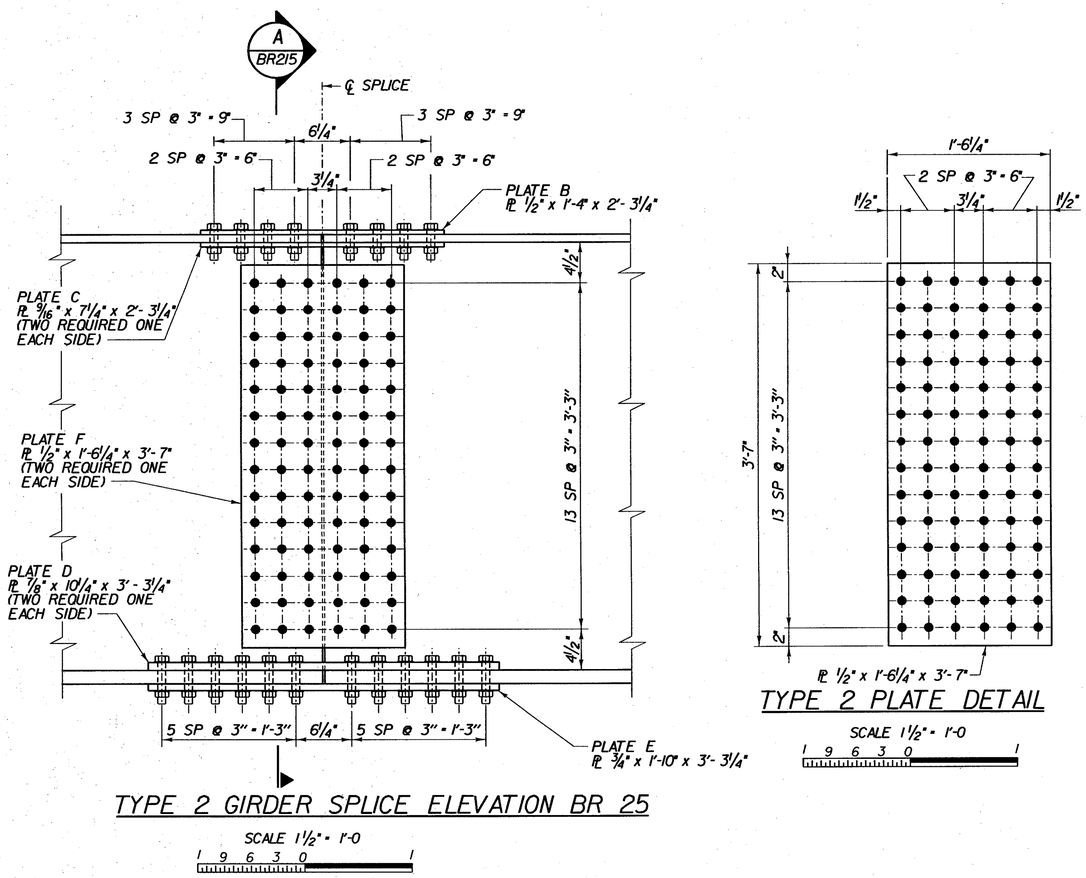

TYPE 2 GIRDER SPLICE ELEVATION BR 25

SCALE 1½" = 1'-0

1 9 6 3 0 1

TYPE 2 PLATE DETAIL

SCALE 1½" = 1'-0

1 9 6 3 0 1

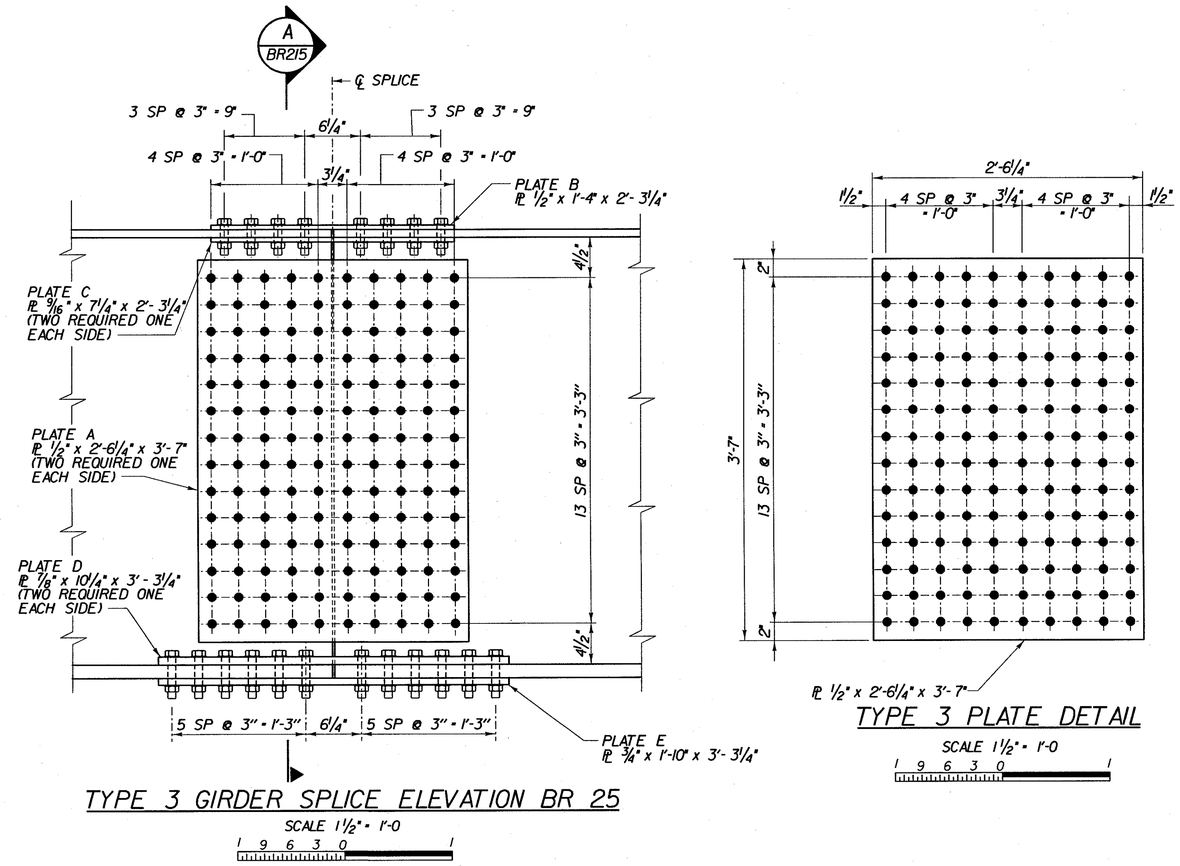

TYPE 3 GIRDER SPLICE ELEVATION BR 25

SCALE 1½" = 1'-0

1 9 6 3 0 1

TYPE 3 PLATE DETAIL

SCALE 1½" = 1'-0

1 9 6 3 0 1

NOTE:

1. FOR FIELD SPLICE NOTES, SEE SHEET, BR215.

STATE OF VERMONT
AGENCY OF TRANSPORTATION

Town Of	SEARSBURG	Bridge No. 25	
		Log Sta.	
Highway No.	VT. RTE. 9	Surv. Sta.	
VT. RTE. 9 OVER DEERFIELD RIVER			
GIRDER SPLICE DETAILS (2) BR 25			
Designed By D. VIENI		Drawn by J. LAGONE/Wm. WEATHERBY	
Checked By M. OLSTAD	Date 2/2002	Bridge Design Supervisor M. OLSTAD	Date 2/2002
PROJECT SEARSBURG - WILMINGTON		PROJECT NO. NHF 010-1(18)	
I.G.C. Info.			
Bridge Sheet No. BR215A		Sheet 142 OF 435	

CLOUGH, HARBOUR & ASSOCIATES LLP
ENGINEERS, SURVEYORS, PLANNERS & LANDSCAPE ARCHITECTS
11 WINNERS CIRCLE ALBANY, NEW YORK, 12205

FILE NAME =u\9755\MSTN\15\BRDG25\25_splicepls4.DGN
DATE/TIME =02/20/02
USER =2225

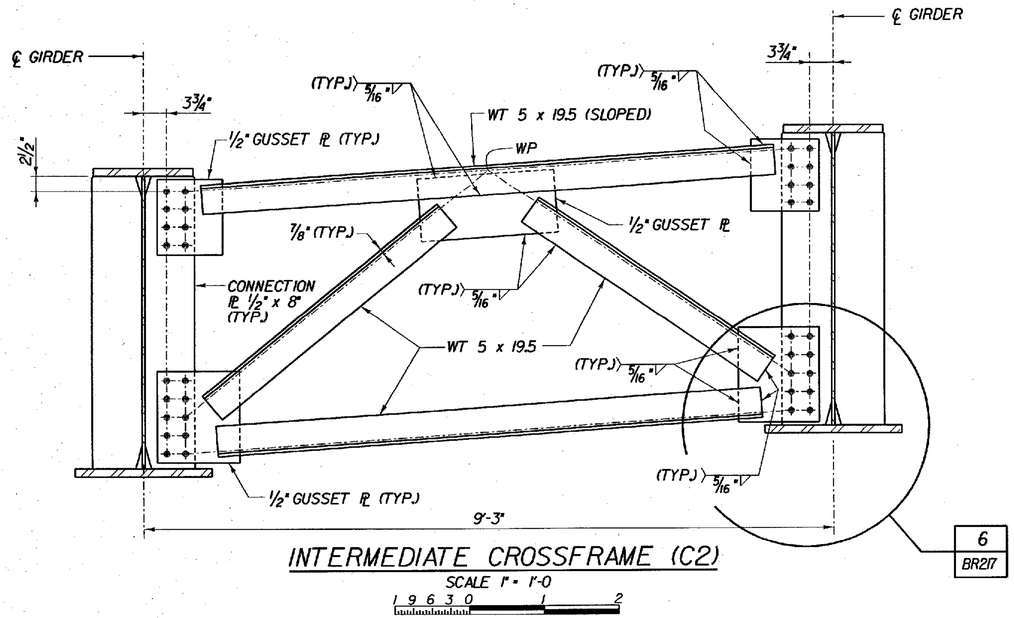

INTERMEDIATE CROSSFRAME (C2)

SCALE 1" = 1'-0

1 9 6 3 0 1 2

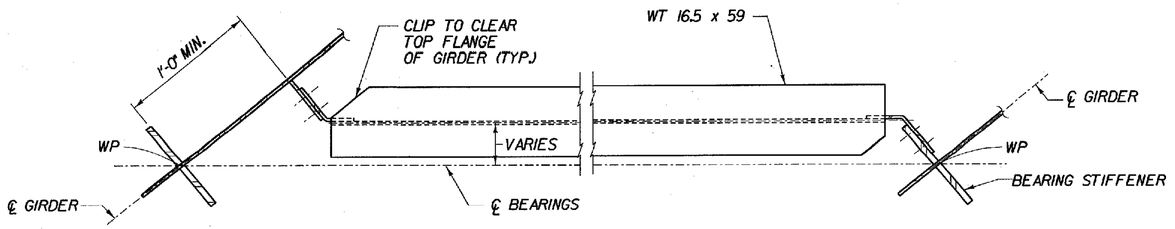

A ABUTMENT CROSSFRAME (C1) SECTION

BR216

SCALE 1" = 1'-0

1 9 6 3 0 1 2

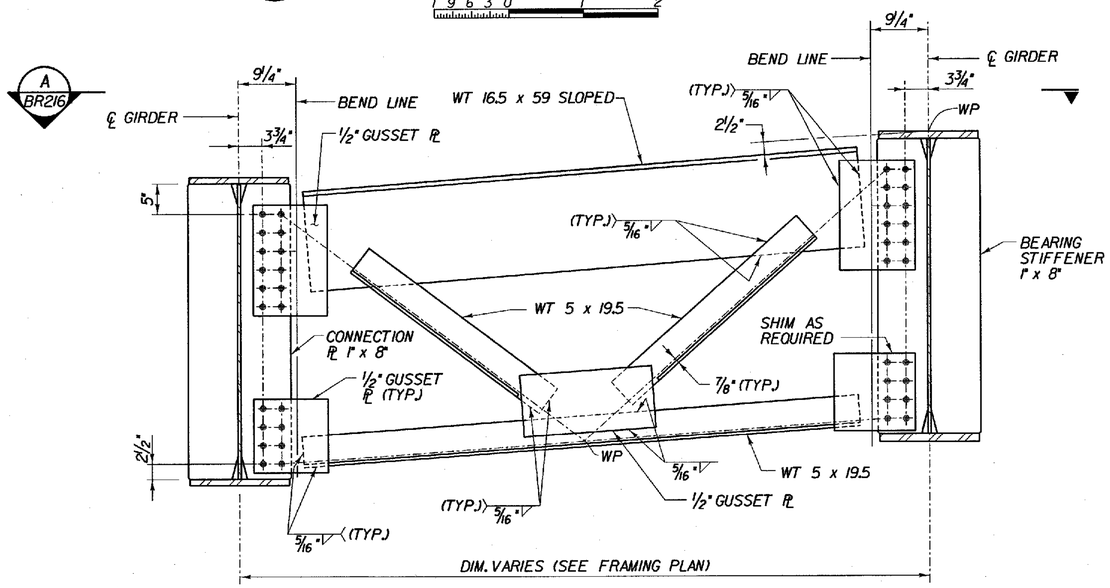

ABUTMENT CROSSFRAME (C1)

(NOT TO SCALE)

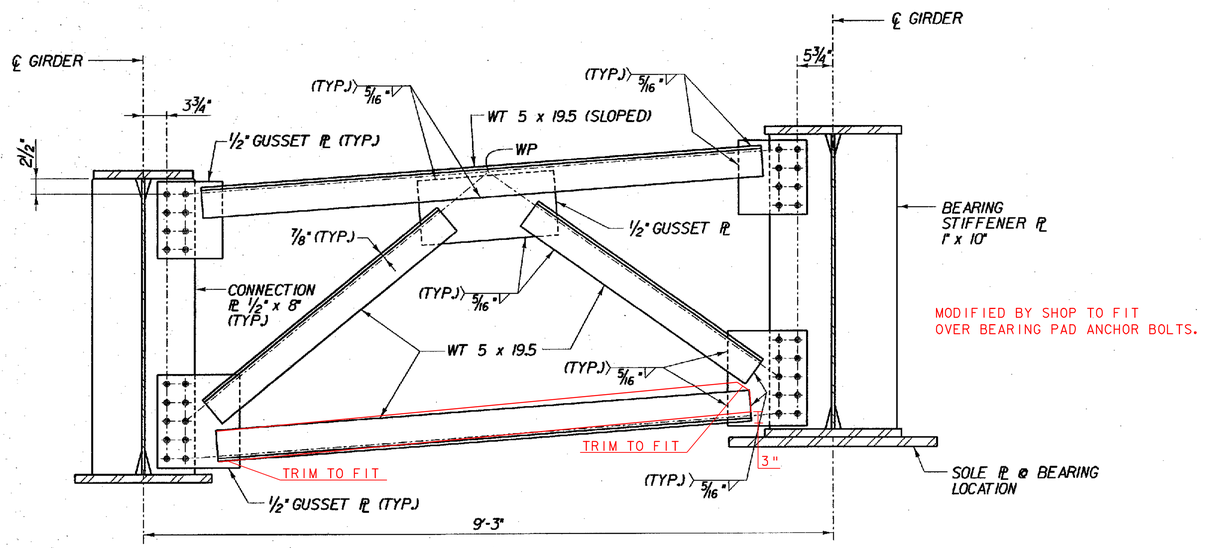

MODIFIED BY SHOP TO FIT OVER BEARING PAD ANCHOR BOLTS.

INTERMEDIATE CROSSFRAME AT PIER (C3)

SCALE 1" = 1'-0

1 9 6 3 0 1 2

NOTE:

1. ALL CONNECTIONS SHALL BE MADE USING A325 7/8" DIA. BOLTS. ALL HOLES IN THE CONNECTION PLATES SHALL BE 15/16" DIAMETER.
2. THE LENGTHS OF WELDS ON EACH SIDE OF THE WT SHALL BE PROPORTIONED TO MINIMIZED ECCENTRICITIES IN THE CONNECTION.
3. ALL CROSSFRAMES AND CONNECTION PLATES REQUIRE CVN TESTING.
4. SEE BR214 FOR WELD LOCATION DETAIL.

STATE OF VERMONT
AGENCY OF TRANSPORTATION

Town Of SEARSBURG	Bridge No. 25
Highway No. VT. RTE. 9	Log Sta. / Surv. Sta.
VT. RTE. 9 OVER DEERFIELD RIVER	
CROSSFRAME DETAILS - 1 - BR 25	
Designed By D. VIENI	Drawn by J. LAGONE / Wm. WEATHERBY
Checked By M. OLSTAD Date 2/2002	Bridge Design Supervisor M. OLSTAD Date 2/2002
PROJECT SEARSBURG - WILMINGTON	PROJECT NO. NHF 010-1(8)
L.G.C. Info.	
Bridge Sheet No. BR216	Sheet 143 OF 435

CHA CLOUGH, HARBOUR & ASSOCIATES LLP
ENGINEERS, SURVEYORS, PLANNERS & LANDSCAPE ARCHITECTS
3 WINNERS CIRCLE ALBANY, NEW YORK, 12205

FILE NAME = c:\v7\5\MSTN\15\BR0226\25.displn100
DATE/TIME = 05/28/02
USER = 2225

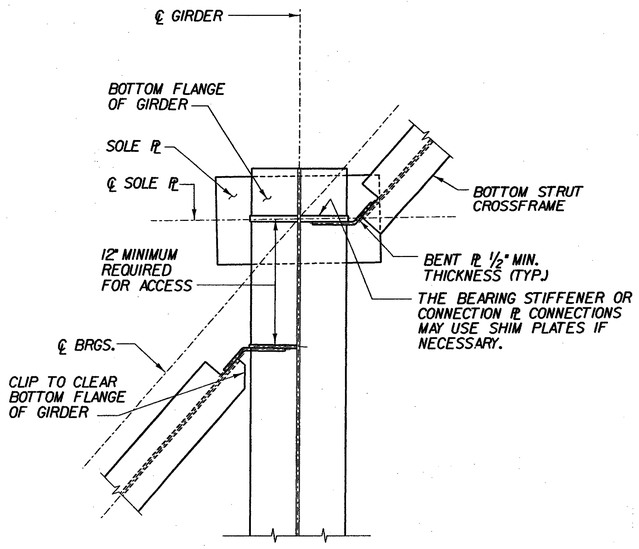

1 BR211 BOTTOM CONN. DETAIL (AT ABUT. 1. ABUT. 2 SIM.)

SCALE 1" = 1'-0

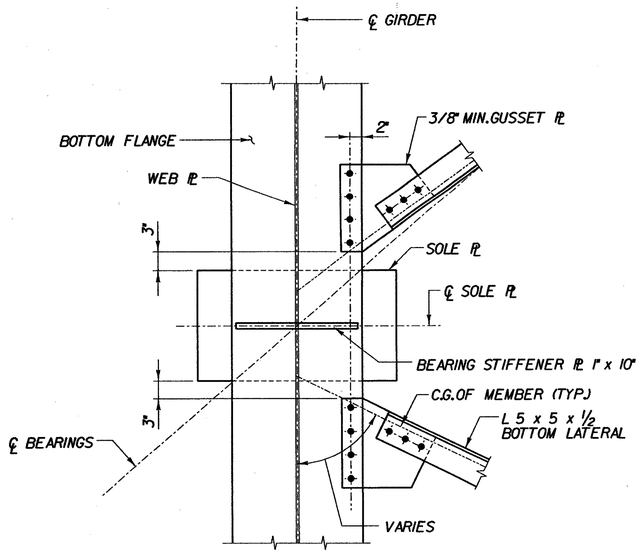

2 BR211 LATERAL CONN. DETAIL @ PIER

SCALE 1" = 1'-0

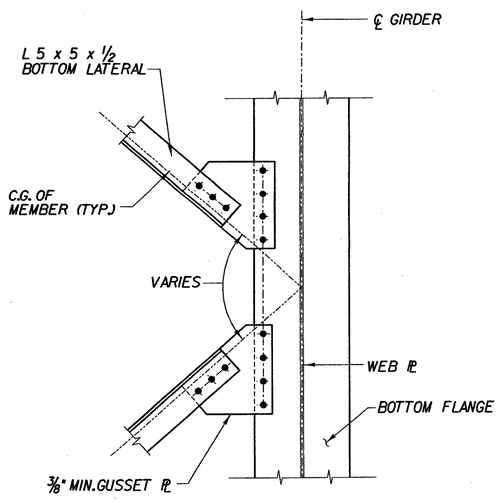

3 BR211 LATERAL BRACING CONN.

SCALE 1" = 1'-0

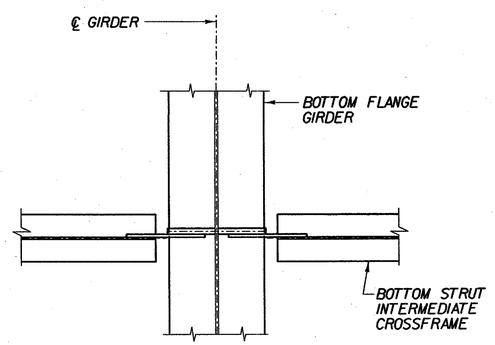

4 BR211 CROSSFRAME BOTTOM CONN.

SCALE 1" = 1'-0

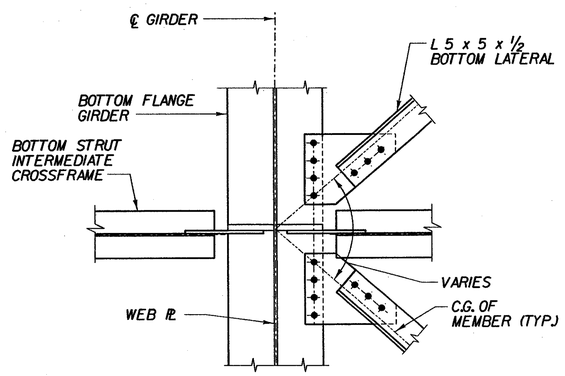

5 BR211 CROSSFRAME & LATERAL BOTTOM CONN.

SCALE 1" = 1'-0

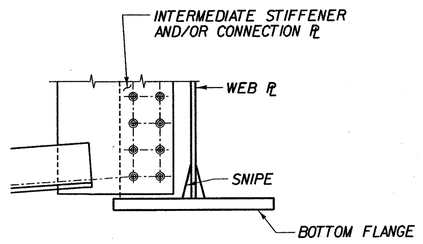

6 BR216 CROSSFRAME CLIPPING DETAIL

SCALE 1" = 1'-0

STATE OF VERMONT
AGENCY OF TRANSPORTATION

Town Of SEARSBURG	Bridge No. 25 / Log Sta. / Surv. Sta.
Highway No. VT. RTE. 9	
VT. RTE. 9 OVER DEERFIELD RIVER	
CROSSFRAME DETAILS - (2) - BR 25	
Designed By D. VIENI	Drawn by J. LAGONE
Checked By M. OLSTAD Date 12/2001	Bridge Design Supervisor M. OLSTAD Date 12/2001
PROJECT SEARSBURG - WILMINGTON	PROJECT NO. NHF 010-1(18)
L.G.C. Info.	
Bridge Sheet No. BR217	Sheet 144 OF 435

CLOUGH, HARBOUR & ASSOCIATES LLP
ENGINEERS, SURVEYORS, PLANNERS & LANDSCAPE ARCHITECTS
8 WINNERS CIRCLE ALBANY, NEW YORK, 12205

FILE NAME = u:\9755\VMSTN\15\BRDG25\25.01AP_DETS.PLT
DATE/TIME = 12/12/01
USER = 2225

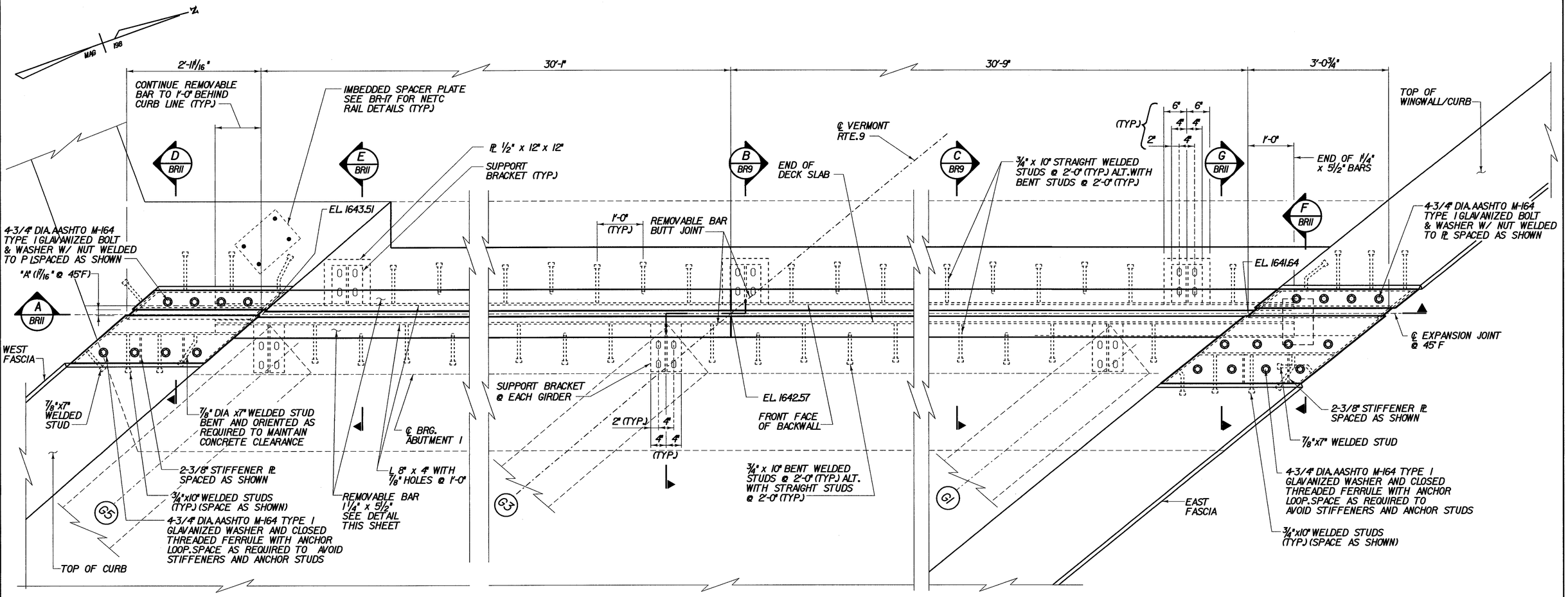

ABUT.1 EXPANSION JOINT PLAN - BR 25

SCALE 1" = 1'-0

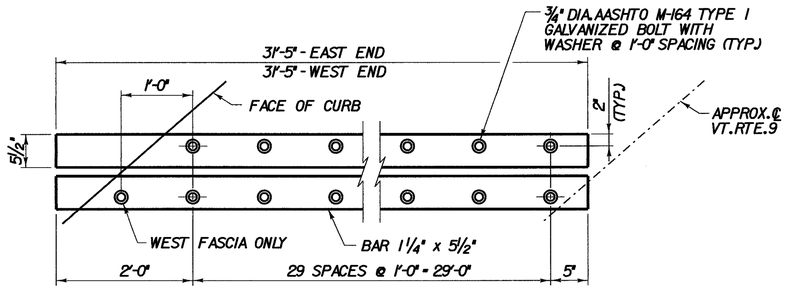

REMOVABLE BARS

SCALE 1" = 1'-0

NOTE:

THE BARS SHALL BE FABRICATED IN APPROXIMATELY 2 EQUAL LENGTHS FOR EACH SIDE OF ℄ VT. RTE. 9

NOTES:

1. TOP AND FACE OF BRUSH CURB ARE ATTACHED BY BOLTS AND ARE REMOVABLE TO ALLOW CLEANING AND/OR REPLACEMENT OF FABRIC TROUGH. SEE BRIDGE SHEET BRII.
2. FOR TYPICAL SECTIONS OF EXPANSION JOINT, SEE EXPANSION JOINT DETAILS, BRIDGE SHEET BR9.
3. FOR VIEW OF FASCIA PLATES, AND LOCATION OF WELDED STUDS ON PLATES, SEE EXP. JOINT DETAILS, BRIDGE SHEET BRII.
4. BARS IN ROADWAY ARE REMOVABLE TO ALLOW CLEANING AND/OR REPLACEMENT OF FABRIC TROUGH.
5. WHERE HOPPER IS NOT REQUIRED, PREFORMED FABRIC DRAIN TROUGH SHALL BE TERMINATED AS SHOWN IN TROUGH END DETAIL ON BRIO.

TEMP.	DIM. "A"	DIM. "B"
15°F	1 3/4"	4 3/4"
30°F	1 5/8"	4 5/8"
45°F	1 1/16"	4 1/16"
60°F	1 5/16"	4 5/16"
75°F	1 3/16"	4 3/16"
90°F	1"	4"

STATE OF VERMONT
AGENCY OF TRANSPORTATION

Town Of SEARSBURG	Bridge No. 25
Highway No. VT. RTE. 9	Log Sta.
	Surv. Sta.

VT. RTE. 9 OVER DEERFIELD RIVER

"VT TYPE" EXPANSION JOINT DETAIL ABUT. 1 - BR 25

Designed By D. VIENI	Drawn by B. DILLENBECK
Checked By M. OLSTAD Date 2/2002	Bridge Design Supervisor M. OLSTAD Date 2/2002
PROJECT SEARSBURG - WILMINGTON	PROJECT NO. NHF 010-1(18)
L.G.C. Info.	
Bridge Sheet No. BR218	Sheet 145 OF 435

CLOUGH, HARBOUR & ASSOCIATES LLP
ENGINEERS, SURVEYORS, PLANNERS & LANDSCAPE ARCHITECTS
11 WINNERS CIRCLE ALBANY, NEW YORK, 12205

FILE NAME = n:\78d095\structures\consultant\022002\15\brdg25\25_exp_jnt_plan.dgn
DATE/TIME = 28-FEB-2002
USER = RWhitcomb

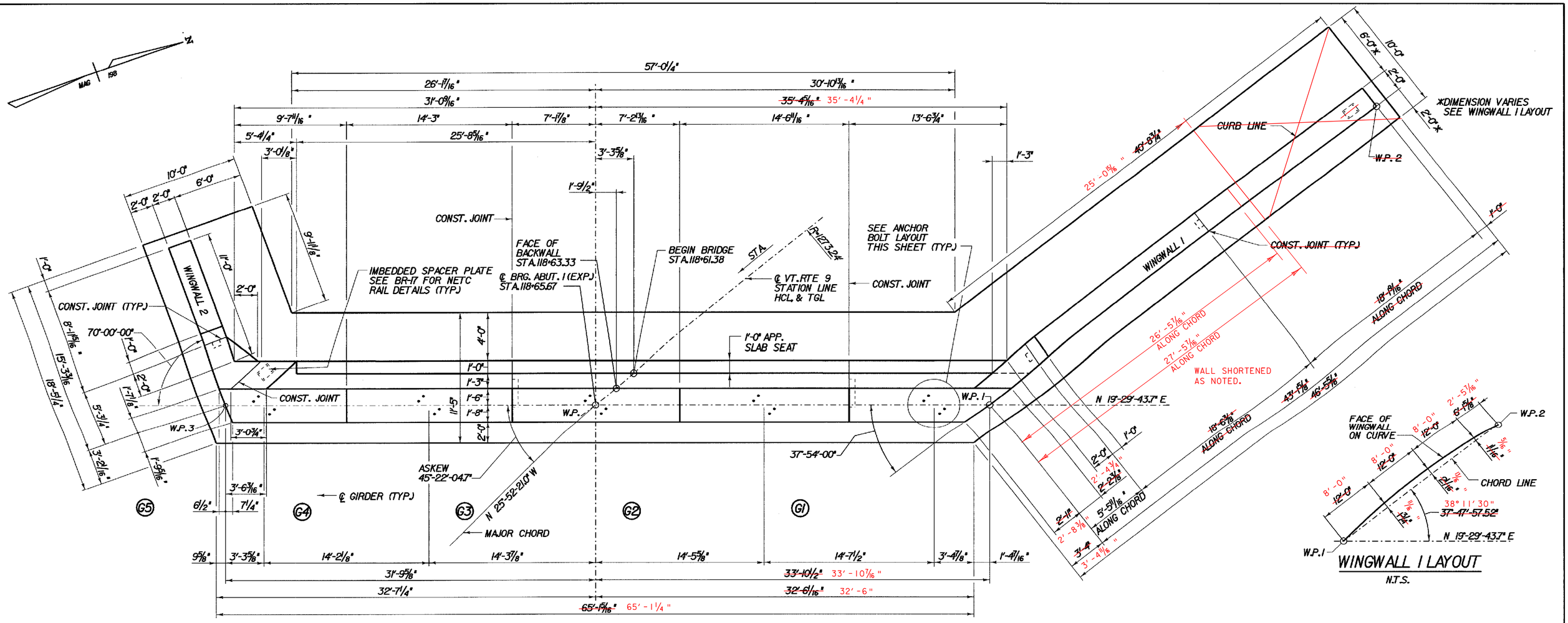

WINGWALL 1 LAYOUT

N.T.S.

ABUTMENT 1 PLAN - BR 25

SCALE 1/4" = 1'-0

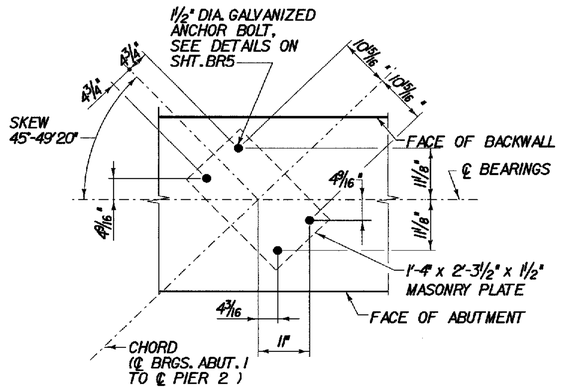

PLAN-ANCHOR BOLT LAYOUT-ABUTMENT 1

SCALE 3/4" = 1'-0

NOTE:

1. FOR BEARING DETAIL SEE BRIDGE SHEET BR5 AND BR7.
2. FOR CONSTRUCTION JOINT DETAIL SEE BRIDGE SHEET BR15.

STATE OF VERMONT
AGENCY OF TRANSPORTATION

Town Of	SEARSBURG	Bridge No. 25	Log Sta.
Highway No.	VT. RTE. 9	Surv. Sta.	
VT. RTE. 9 OVER DEERFIELD RIVER			
ABUTMENT 1 PLAN - BR 25			
Designed By D. VIENI		Drawn by K. DETRICK/Wm WEATHERBY	
Checked By M. OLSTAD	Date 2/2002	Bridge Design Supervisor M. OLSTAD	Date 2/2002
PROJECT SEARSBURG - WILMINGTON		PROJECT NO. NHF 010-1(18)	
I.G.C. Info.			
Bridge Sheet No. BR220		Sheet 146 OF 435	

CLOUGH, HARBOUR & ASSOCIATES LLP
ENGINEERS, SURVEYORS, PLANNERS & LANDSCAPE ARCHITECTS
11 WINNERS CIRCLE ALBANY, NEW YORK, 12205

FILE NAME =R:\Admin\structures\consultant 022002\10\brdg25\25_abut1.dgn
DATE/TIME =26-FEB-2002
USER =RWhitcomb

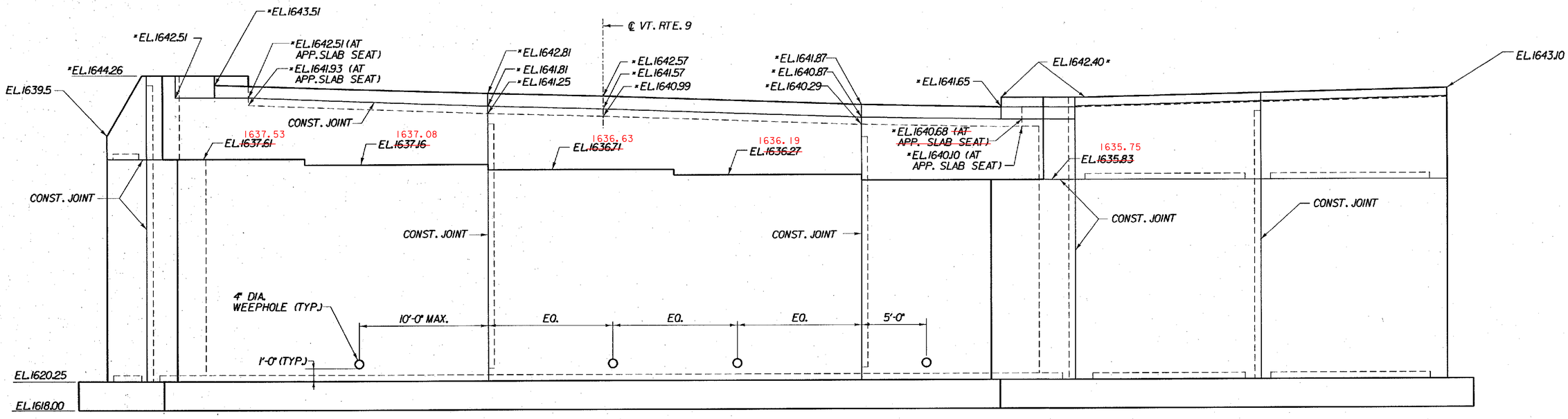

ABUTMENT I ELEVATION - BR 25

SCALE 1/4" = 1'-0

1 0 2 4 6

* ELEVATIONS ARE APPROXIMATE, USED FOR ESTIMATING PURPOSES ONLY. ALL TOP OF BACKWALL ELEVATIONS WILL BE DETERMINED AFTER STRUCTURAL STEEL IS SET.

STATE OF VERMONT
AGENCY OF TRANSPORTATION

Town Of	SEARSBURG	Bridge No. 25	
		Log Sta.	
Highway No.	VT. RTE. 9	Surv. Sta.	
VT. RTE. 9 OVER DEERFIELD RIVER			
ABUTMENT I ELEVATION - BR 25			
Designed By D. VIENI		Drawn by K. DETRICK/Wm WEATHERBY	
Checked By M. OLSTAD	Date 2/2002	Bridge Design Supervisor M. OLSTAD	Date 2/2002
PROJECT SEARSBURG - WILMINGTON		PROJECT NO. NHF 010-1(18)	
I.G.C. Info.			
Bridge Sheet No. BR221		Sheet 147 OF 435	

CHA CLOUGH, HARBOUR & ASSOCIATES LLP
ENGINEERS, SURVEYORS, PLANNERS & LANDSCAPE ARCHITECTS
11 WINNERS CIRCLE ALBANY, NEW YORK, 12205

FILE NAME =u:\9755\MSTN\15\BRDG25\25_abut1.DGN
DATE/TIME =02/20/02
USER =2225

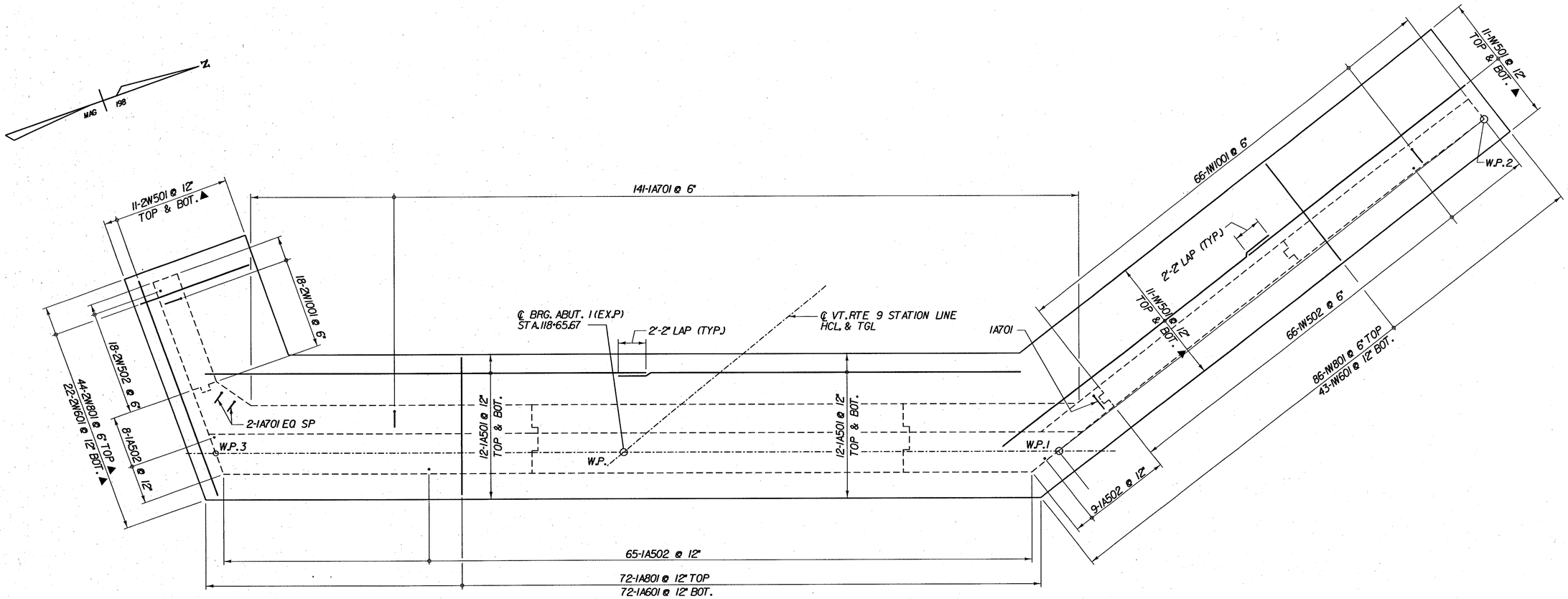

ABUTMENT 1 FOOTING REINFORCING PLAN - BR 25

SCALE 1/4" = 1'-0

1 0 2 4 6

KEY:

NF = NEAR FACE
FF = FAR FACE
EF = EACH FACE
▲ = CUT TO FIT IN FIELD
3" CLR. UNLESS OTHERWISE SPECIFIED ON THE PLANS.

CHA CLOUGH, HARBOUR & ASSOCIATES LLP
ENGINEERS, SURVEYORS, PLANNERS & LANDSCAPE ARCHITECTS
11 WINNERS CIRCLE ALBANY, NEW YORK, 12205

STATE OF VERMONT
AGENCY OF TRANSPORTATION

Town Of	SEARSBURG	Bridge No. 25	
		Log Sta.	
Highway No.	VT. RTE. 9	Surv. Sta.	
VT. RTE. 9 OVER DEERFIELD RIVER			
ABUTMENT 1 FOOTING REINFORCING PLAN - BR 25			
Designed By D. VIENI		Drawn by K. DETRICK/Wm WEATHERBY	
Checked By M. OLSTAD	Date 2/2002	Bridge Design Supervisor M. OLSTAD	Date 2/2002
PROJECT SEARSBURG - WILMINGTON		PROJECT NO. NHF 010-1(18)	
I.G.C. Info.		Wm WEATHERBY	
Bridge Sheet No. BR222		Sheet 148 OF 435	

FILE NAME =u:\9755\MSTN\15\BRDG25\25_abldtsh1.DGN
DATE/TIME =02/20/02
USER =2225

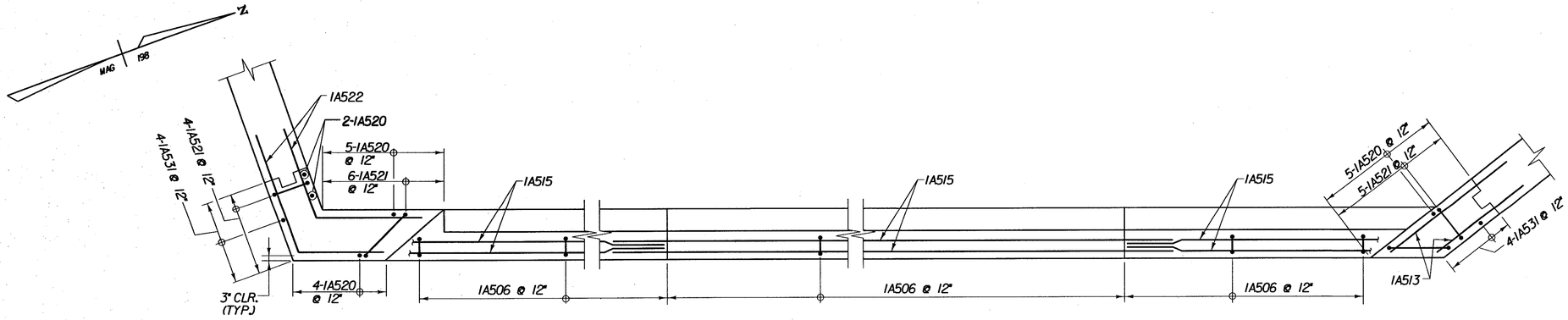

B BR224 TOP OF BACKWALL REINFORCING PLAN - BR 25

SCALE 3/8" = 1'-0

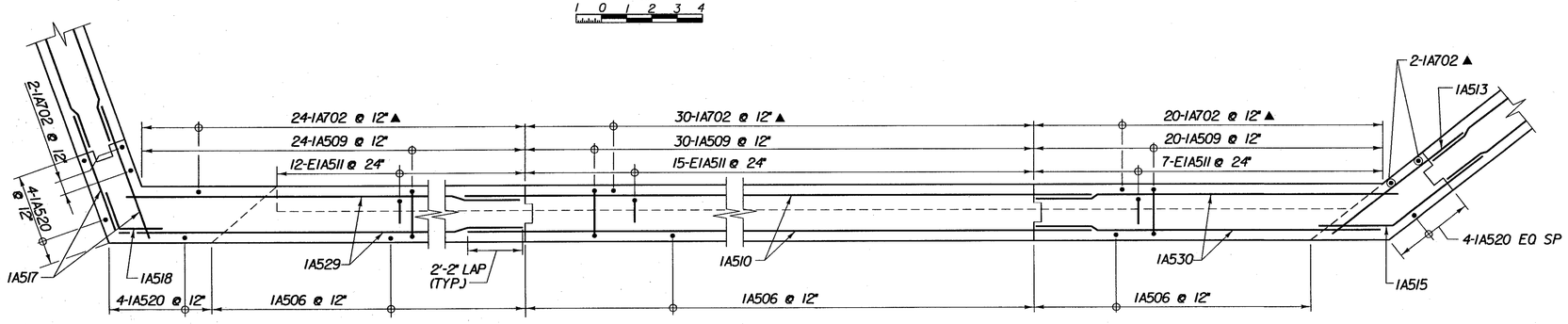

C BR224 BACKWALL REINFORCING PLAN - BR 25

SCALE 3/8" = 1'-0

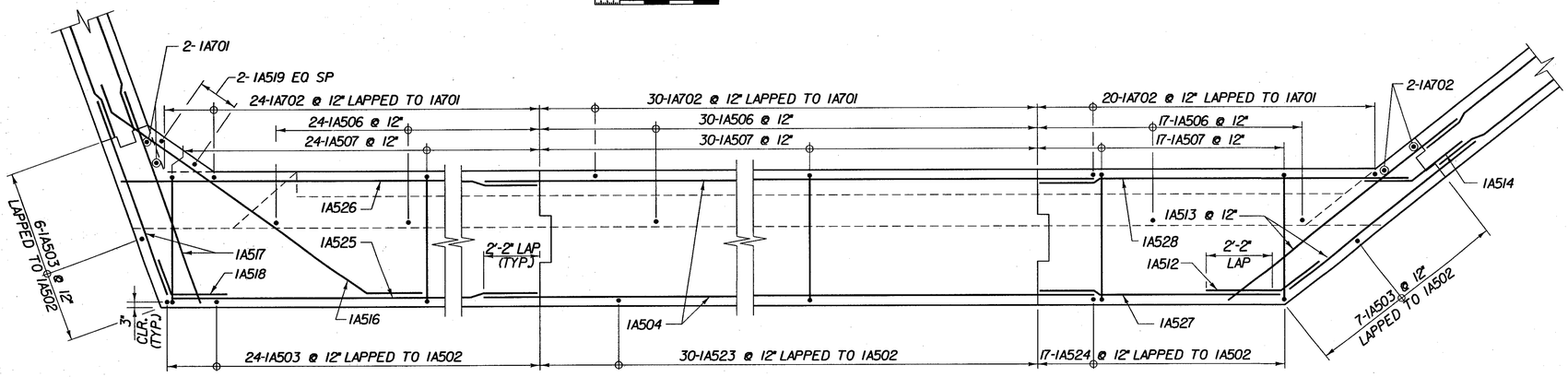

D BR224 STEM REINFORCING PLAN - BR 25

SCALE 3/8" = 1'-0

KEY:
NF = NEAR FACE
FF = FAR FACE
EF = EACH FACE
▲ = CUT TO FIT IN FIELD
3" CLR. UNLESS OTHERWISE SPECIFIED ON THE PLANS.

STATE OF VERMONT
AGENCY OF TRANSPORTATION

Town Of	SEARSBURG	Bridge No. 25	
		Log Sta.	
Highway No.	VT. RTE. 9	Surv. Sta.	
VT. RTE. 9 OVER DEERFIELD RIVER			
ABUTMENT I REINFORCING - BR 25			
Designed By D. VIENI		Drawn by Wm WEATHRBY/J. LAGONE	
Checked By M. OLSTAD	Date 2/2002	Bridge Design Supervisor M. OLSTAD	Date 2/2002
PROJECT SEARSBURG - WILMINGTON		PROJECT NO. NHF 010-K(18)	
L.G.C. Info.			
Bridge Sheet No. BR223		Sheet 149 OF 435	

CHA CLOUGH, HARBOUR & ASSOCIATES LLP
ENGINEERS, SURVEYORS, PLANNERS & LANDSCAPE ARCHITECTS
11 WINNERS CIRCLE ALBANY, NEW YORK, 12205

FILE NAME =u:\9755\MSTN\15\BRDG25\25_abldtsh2.DGN
DATE/TIME =02/20/02
USER =2225

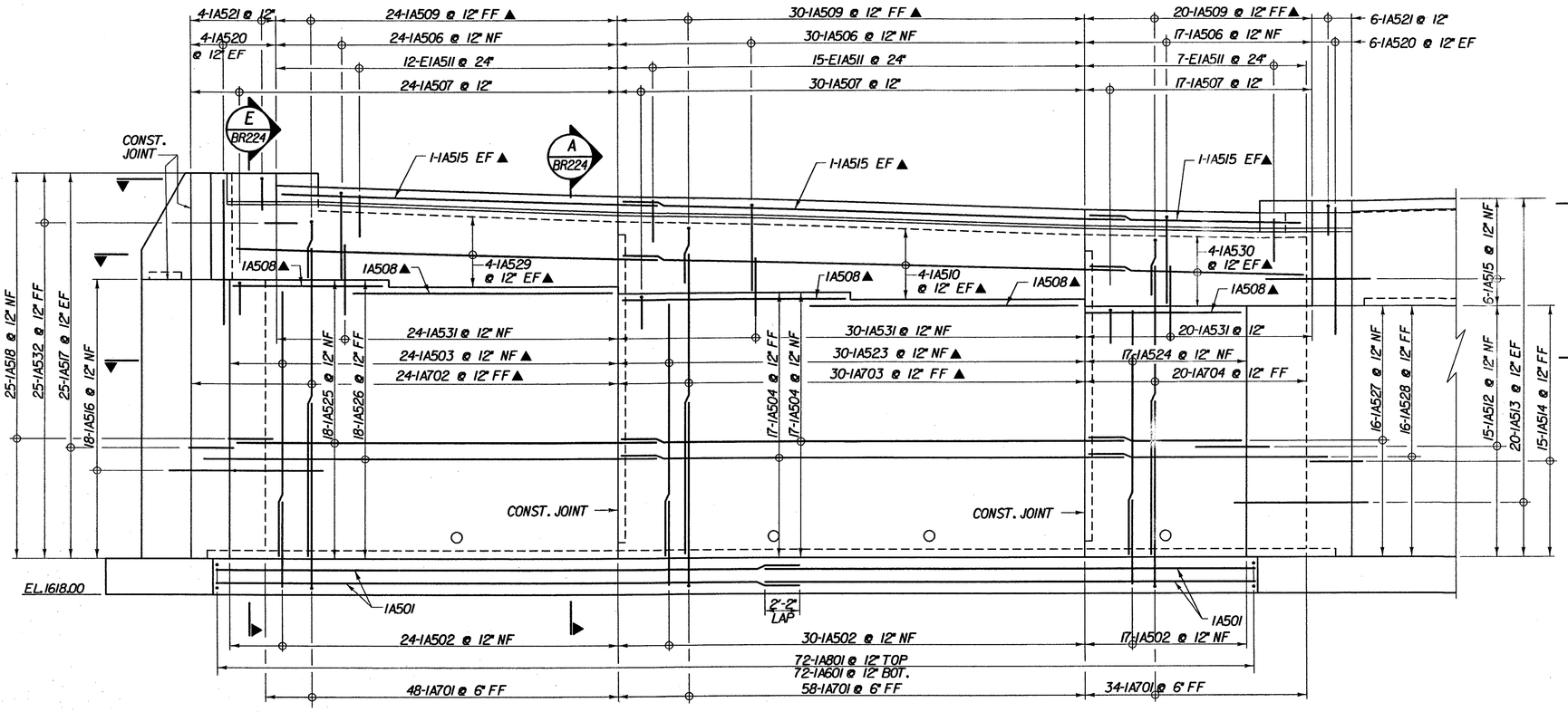

ABUTMENT I REINFORCING ELEVATION - BR 25

SCALE 1/4" = 1'-0

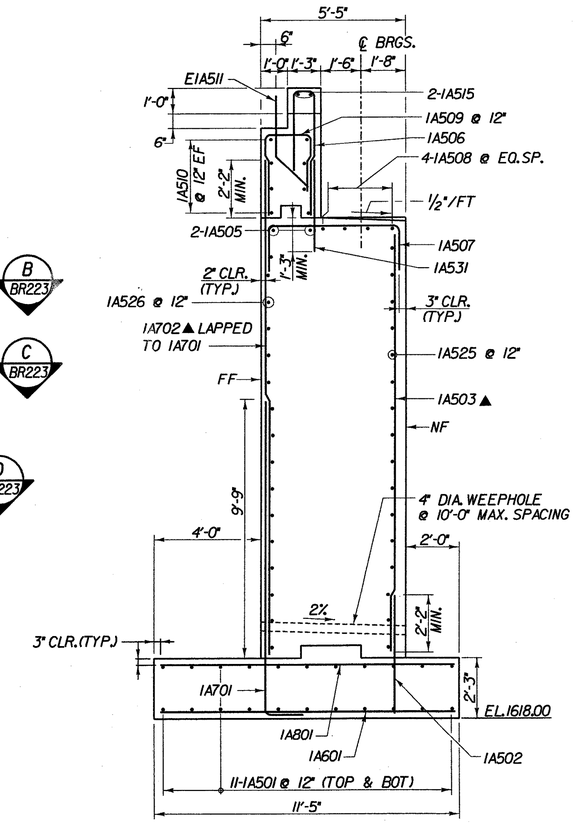

A BR224 ABUTMENT I SECTION - BR 25

SCALE 3/8" = 1'-0

KEY:
NF = NEAR FACE
FF = FAR FACE
EF = EACH FACE
▲ = CUT TO FIT IN FIELD
3" CLR. UNLESS OTHERWISE SPECIFIED ON THE PLANS.

CLOUGH, HARBOUR & ASSOCIATES LLP
ENGINEERS, SURVEYORS, PLANNERS & LANDSCAPE ARCHITECTS
11 WINNERS CIRCLE ALBANY, NEW YORK, 12205

STATE OF VERMONT
AGENCY OF TRANSPORTATION

Town Of	SEARSBURG	Bridge No. 25
		Log Sta.
Highway No.	VT. RTE. 9	Surv. Sta.

VT. RTE. 9 OVER DEERFIELD RIVER

ABUTMENT I REINFOFRCING ELEVATION - BR 25

Designed By D. VIENI	Drawn by K. DETRICK/Wm WEATHERBY
Checked By M. OLSTAD Date 12/2001	Bridge Design Supervisor M. OLSTAD Date 12/2001
PROJECT SEARSBURG - WILMINGTON	PROJECT NO. NHF 010-1(18)
L.G.C. Info.	
Bridge Sheet No. BR224	Sheet 150 OF 435

FILE NAME =u:\9755\mstn\15\BRDG25\25.ablelernf.plt
DATE/TIME =12/14/2001
USER =664

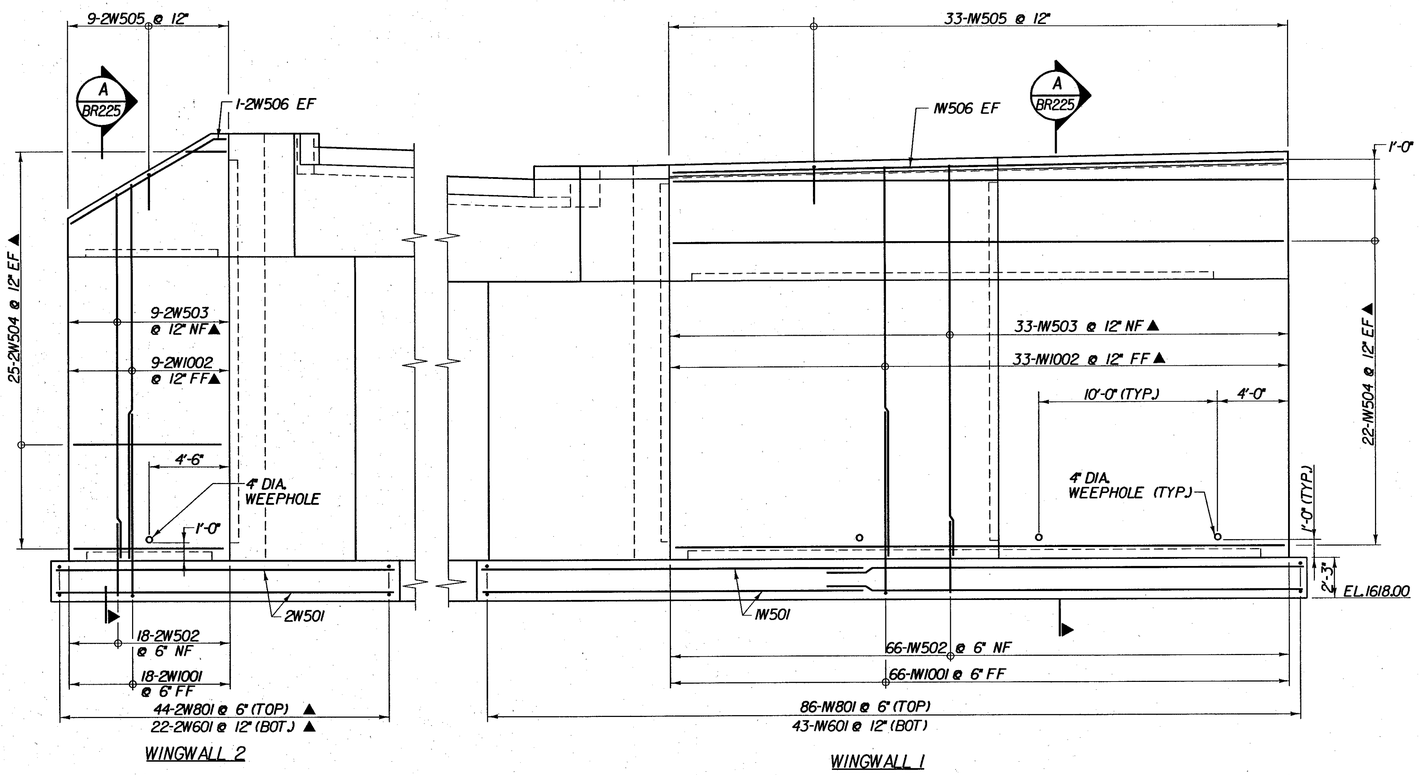

ABUTMENT 1 WINGWALL REINFORCING ELEVATIONS - BR 25

SCALE 1/4" = 1'-0

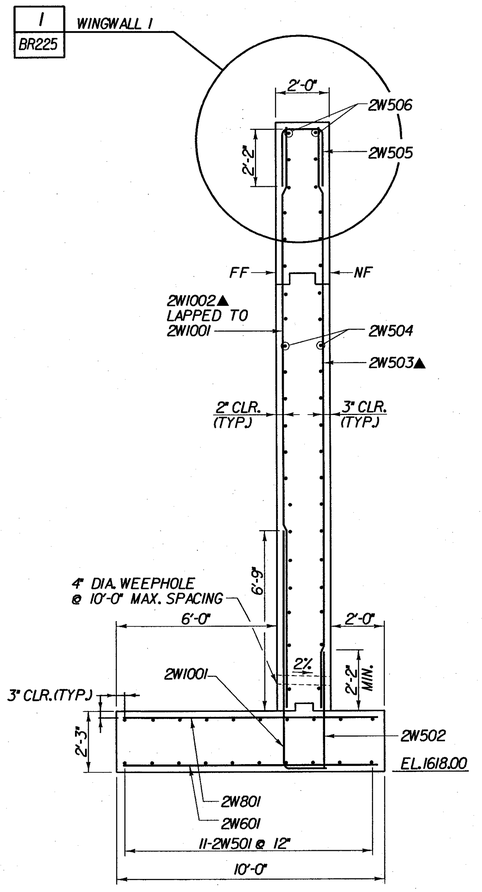

A BR225 TYPICAL WINGWALL SECTION - BR 25

(WW 2 SHOWN, WW 1 SIMILAR)

SCALE 3/8" = 1'-0

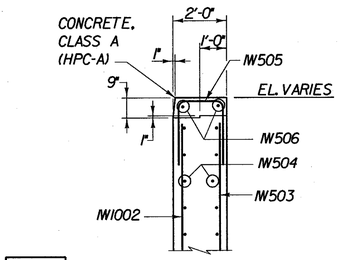

1 BR225 WINGWALL 1 CURB DETAIL

SCALE 3/8" = 1'-0

KEY:

NF = NEAR FACE
FF = FAR FACE
EF = EACH FACE
▲ = CUT TO FIT IN FIELD
3" CLR. UNLESS OTHERWISE SPECIFIED ON THE PLANS.

CLOUGH, HARBOUR & ASSOCIATES LLP
ENGINEERS, SURVEYORS, PLANNERS & LANDSCAPE ARCHITECTS
11 WINNERS CIRCLE ALBANY, NEW YORK, 12205

STATE OF VERMONT
AGENCY OF TRANSPORTATION

Town Of	SEARSBURG	Bridge No. 25	
		Log Sta.	
Highway No.	VT. RTE. 9	Surv. Sta.	
VT. RTE. 9 OVER DEERFIELD RIVER			
ABUTMENT 1 WINGWALL REINFORCING - BR 25			
Designed By D. VIENI		Drawn by Wm WEATHERBY	
Checked By M. OLSTAD	Date 2/2002	Bridge Design Supervisor M. OLSTAD	Date 2/2002
PROJECT SEARSBURG - WILMINGTON		PROJECT NO. NHF 010-K(18)	
I.G.C. Info.			
Bridge Sheet No. BR225		Sheet 151 OF 435	

FILE NAME =u:\9755\MSTN\15\BRDG25\25_ab1rnf.DGN
DATE/TIME =02/20/02
USER =2225

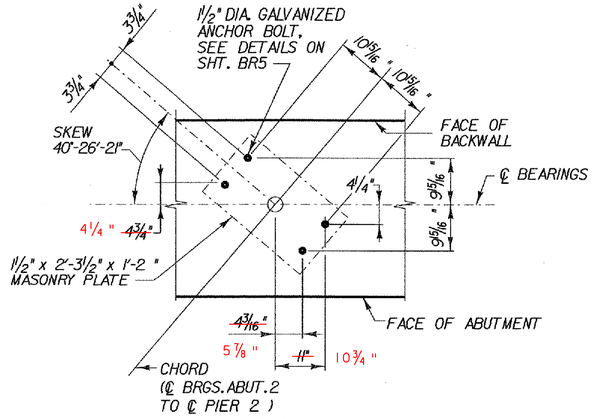

PLAN-ANCHOR BOLT LAYOUT-ABUTMENT 2 - BR 25

SCALE ¾"= 1'-0

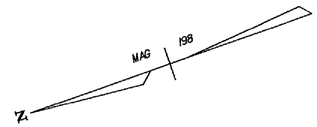

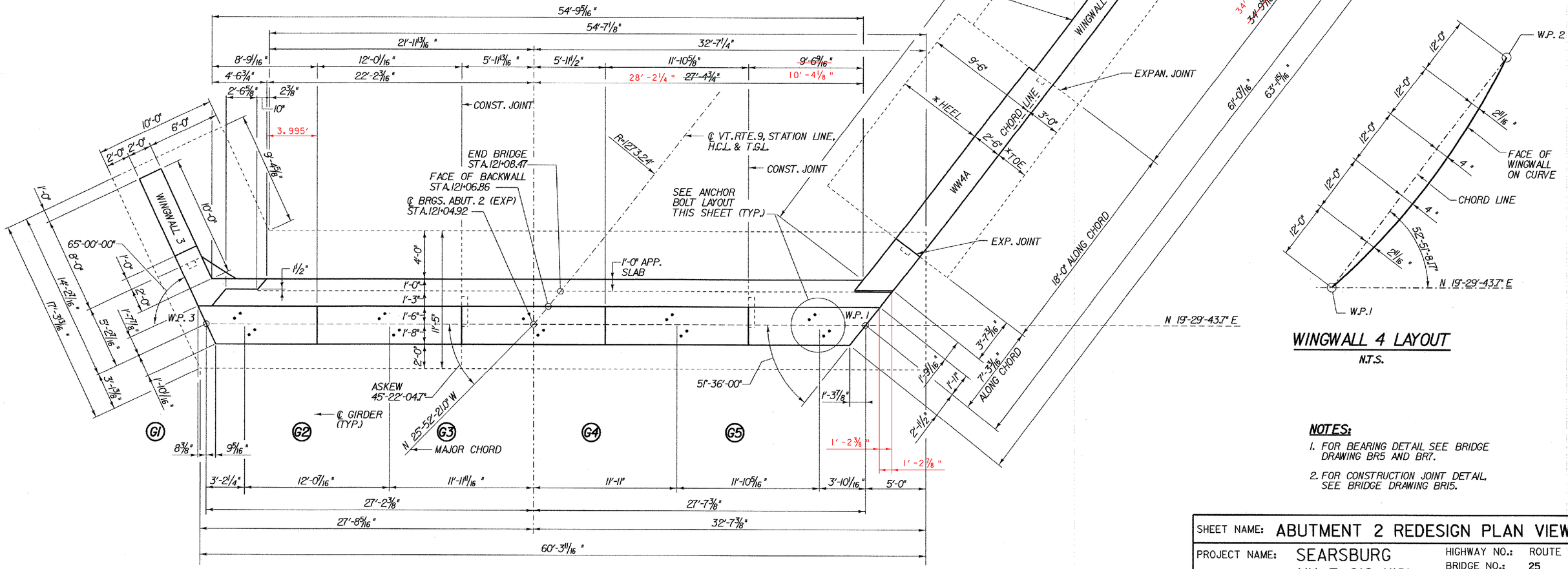

ABUTMENT 2 PLAN - BR 25

SCALE ¼"= 1'-0

WINGWALL 4 LAYOUT

N.T.S.

NOTES:

1. FOR BEARING DETAIL SEE BRIDGE DRAWING BR5 AND BR7.
2. FOR CONSTRUCTION JOINT DETAIL, SEE BRIDGE DRAWING BR15.

SHEET NAME: ABUTMENT 2 REDESIGN PLAN VIEW	
PROJECT NAME: SEARSBURG	HIGHWAY NO.: ROUTE 9
PROJECT NUMBER: NH F 010-1(18)	BRIDGE NO.: 25
	OVER: THE DEERFIELD RIVER
FILE NAME: /str4/78d096/25 abut2.dgn	PLOT DATE: 16-JAN-2003
PROJECT MANAGER: R.WHITCOMB	DRAWN BY: J.GILMORE
DESIGNED BY: CH&A LLP	IPARM NAME: br226
BRIDGE SHEET NUMBER: BR226	SHEET 152 OF 435

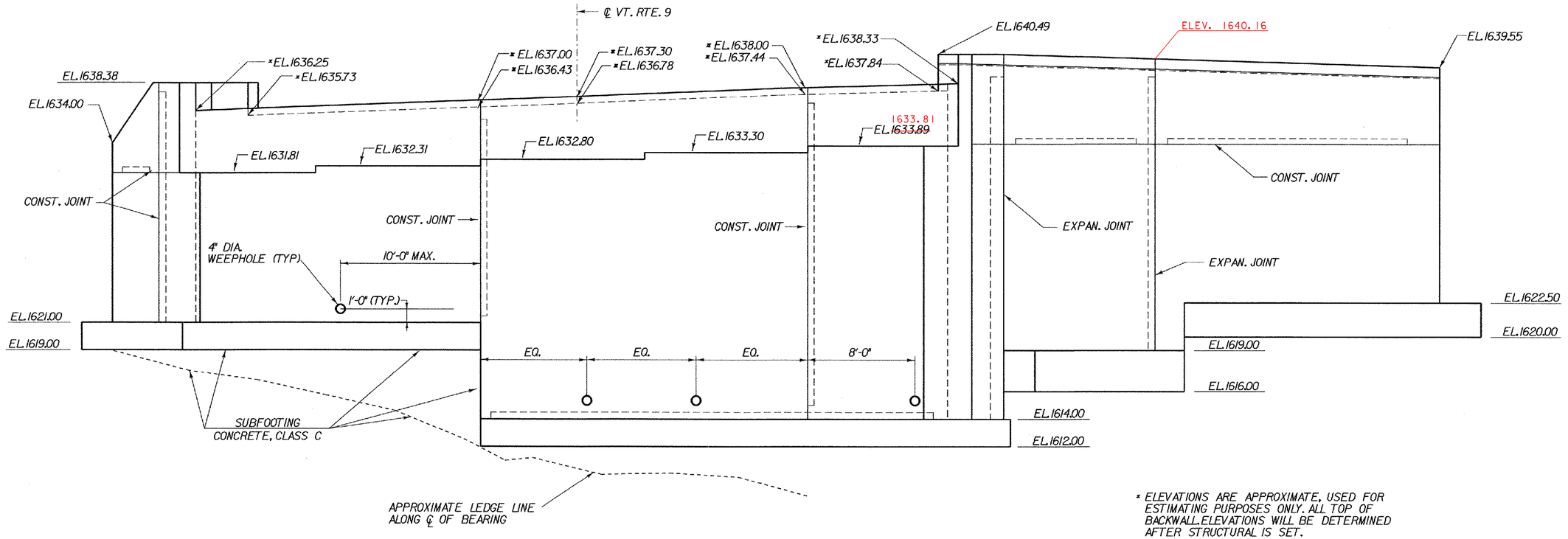

× ELEVATIONS ARE APPROXIMATE, USED FOR ESTIMATING PURPOSES ONLY. ALL TOP OF BACKWALL ELEVATIONS WILL BE DETERMINED AFTER STRUCTURAL IS SET.

ABUTMENT 2 ELEVATION - BR 25

SCALE 1/4" = 1'-0

1 0 2 4 6

SHEET NAME: ABUTMENT 2 REDESIGN - ELEVATION

PROJECT NAME: SEARSBURG
PROJECT NUMBER: NH F 010-1(18)

HIGHWAY NO.: ROUTE 9
BRIDGE NO.: 25
OVER: THE DEERFIELD RIVER

FILE NAME: /str4/78d096/25 abut2.dgn
PROJECT MANAGER: R.WHITCOMB
DESIGNED BY: CH&A LLP
BRIDGE SHEET NUMBER: BR227

PLOT DATE: 16-JAN-2003
DRAWN BY: J.GILMORE
IPARM NAME: br227
SHEET 153 OF 435

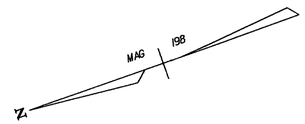

ABUTMENT 2 REINFORCING PLAN - BR 25

SCALE 1/4" = 1'-0

1 0 2 4 6

KEY:
NF = NEAR FACE
FF = FAR FACE
EF = EACH FACE
▲ = CUT TO FIT IN FIELD
3" CLR. UNLESS OTHERWISE SPECIFIED ON THE PLANS.

SHEET NAME: ABUT 2 FOOTING REINFORCING PLAN	
PROJECT NAME: SEARSBURG	HIGHWAY NO.: ROUTE 9
PROJECT NUMBER: NH F 010-1(18)	BRIDGE NO.: 25
	OVER: THE DEERFIELD RIVER
FILE NAME: /str4/78d096/25 db2elernf.dgn	PLOT DATE: 16-JAN-2003
PROJECT MANAGER: R.WHITCOMB	DRAWN BY: J.GILMORE
DESIGNED BY: CH&A LLP	IPARM NAME: br228
BRIDGE SHEET NUMBER: BR228	SHEET 154 OF 435

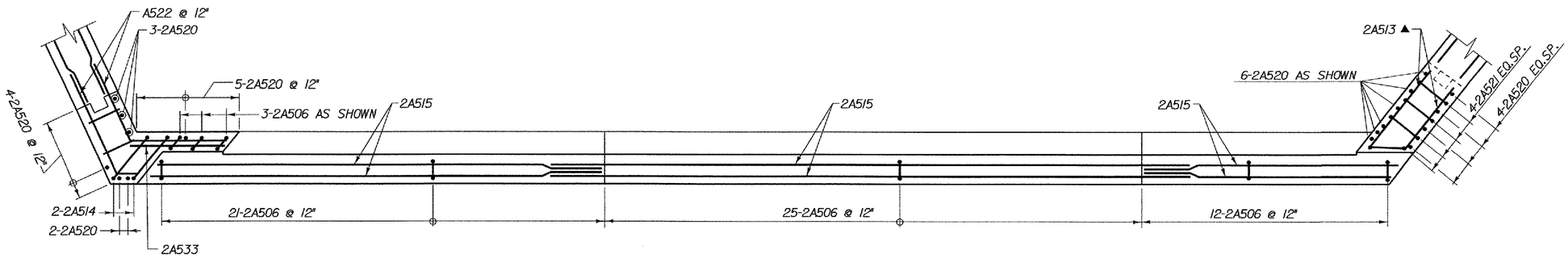

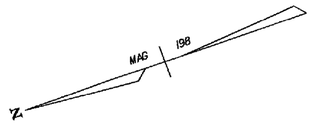

B BR230 TOP OF BACKWALL REINFORCING PLAN - BR 25

SCALE 3/8" = 1'-0

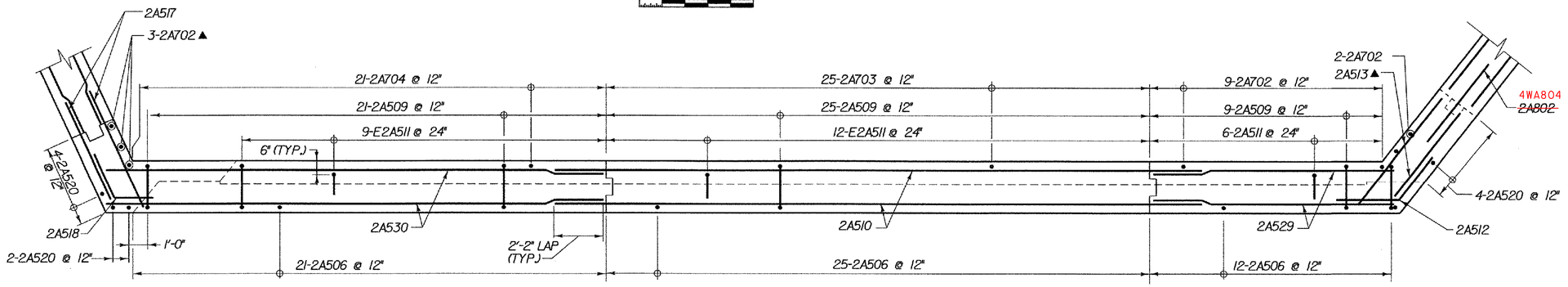

C BR230 BACKWALL REINFORCING PLAN - BR 25

SCALE 3/8" = 1'-0

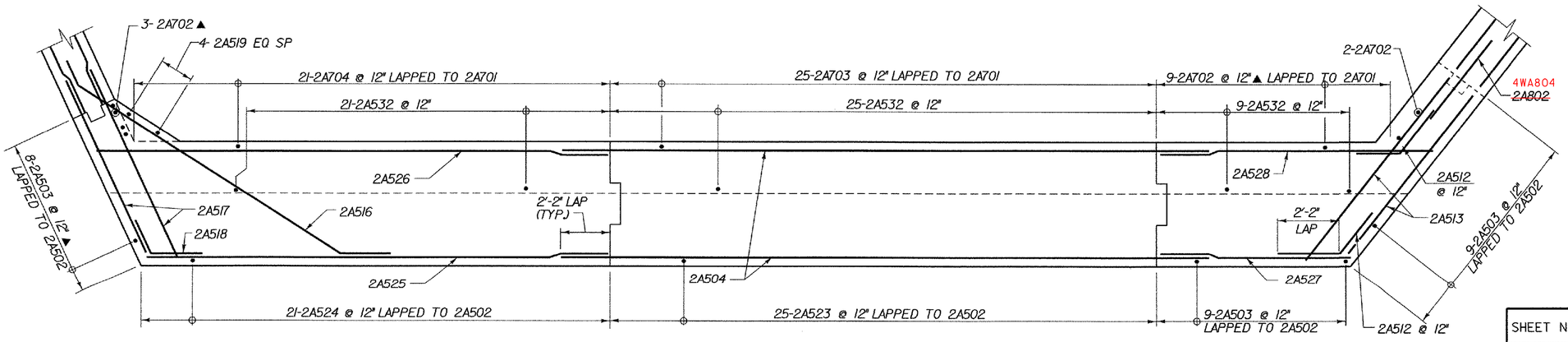

D BR230 STEM REINFORCING PLAN - BR 25

SCALE 3/8" = 1'-0

KEY:

NF = NEAR FACE
FF = FAR FACE
EF = EACH FACE
▲ = CUT TO FIT IN FIELD
3" CLR. UNLESS OTHERWISE SPECIFIED ON THE PLANS.

SHEET NAME: ABUTMENT 2 REINFORCING - 2	
PROJECT NAME: SEARSBURG	HIGHWAY NO.: ROUTE 9
PROJECT NUMBER: NH F 010-1(18)	BRIDGE NO.: 25
	OVER: THE DEERFIELD RIVER
FILE NAME: /str4/78d096/25 ab2elernf.dgn	PLOT DATE: 16-JAN-2003
PROJECT MANAGER: R.WHITCOMB	DRAWN BY: J.GILMORE
DESIGNED BY: CH&A LLP	IPARM NAME: br229
BRIDGE SHEET NUMBER: BR229	SHEET 155 OF 435

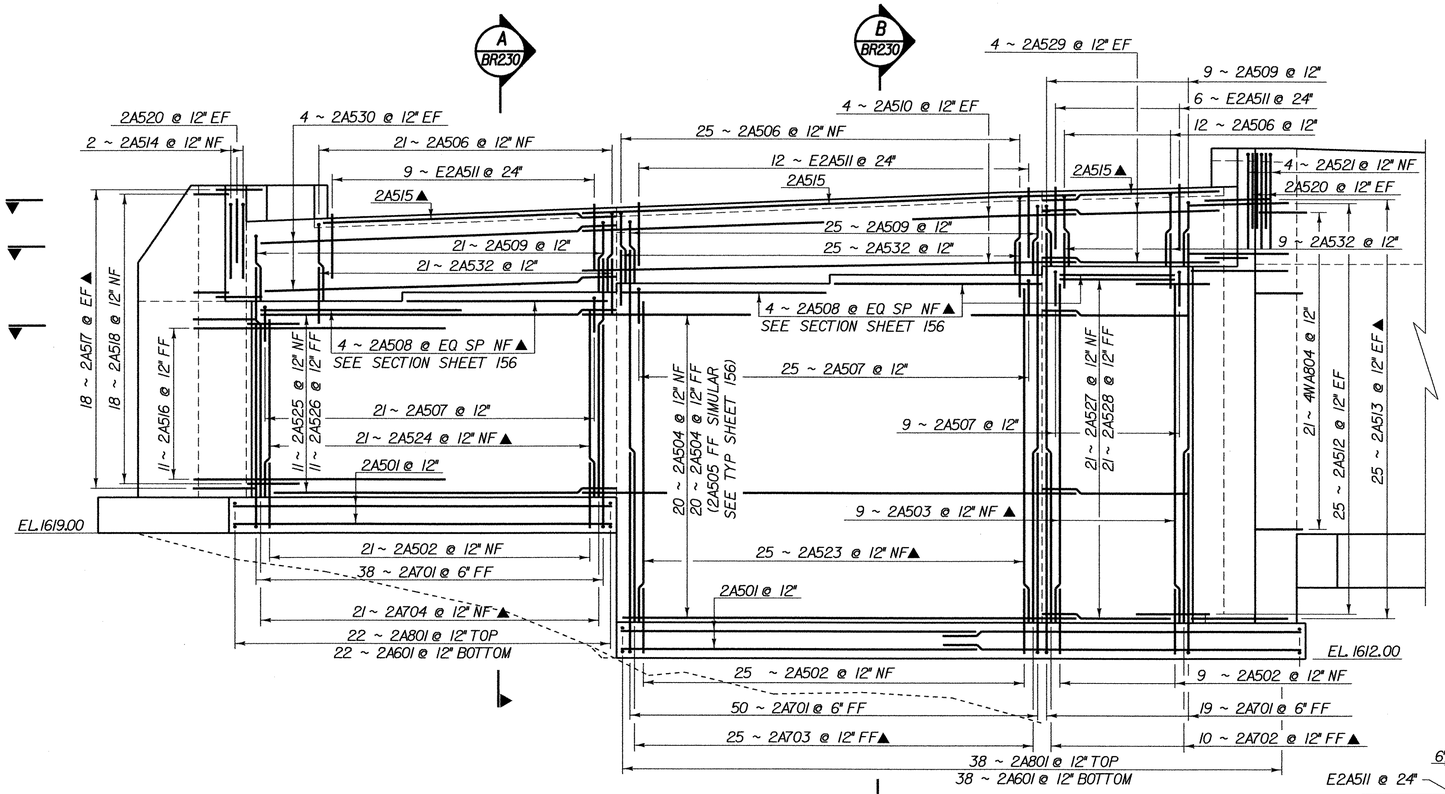

ABUTMENT 2 REINFORCING ELEVATION - BR 25

SCALE 1/4" = 1'-0

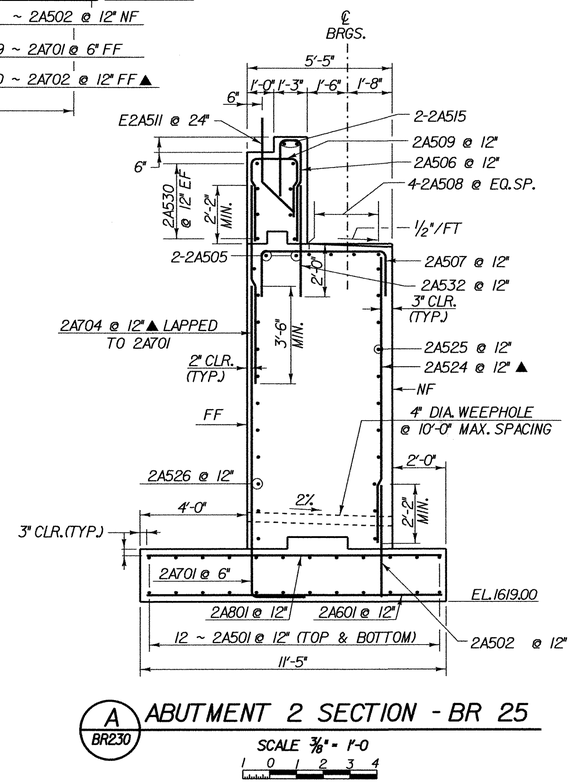

A BR230 ABUTMENT 2 SECTION - BR 25

SCALE 3/8" = 1'-0

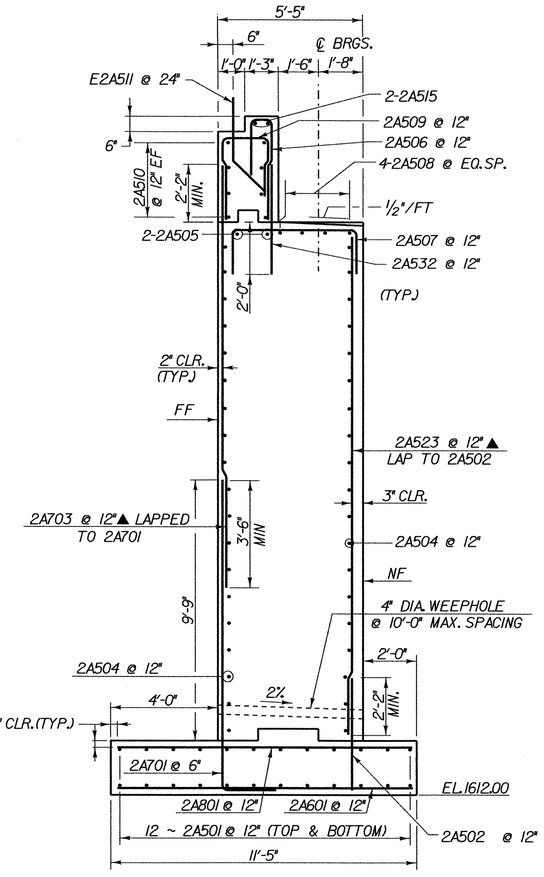

B BR230 ABUTMENT 2 SECTION - BR 25

SCALE 3/8" = 1'-0

KEY:

NF = NEAR FACE
FF = FAR FACE
EF = EACH FACE
▲ = CUT TO FIT IN FIELD
3" CLR. UNLESS OTHERWISE SPECIFIED ON THE PLANS.

SHEET NAME: ABUTMENT 2 REINFORCING ELEV	
PROJECT NAME: SEARSBURG	HIGHWAY NO.: ROUTE 9
PROJECT NUMBER: NH F 010-1(18)	BRIDGE NO.: 25
	OVER: THE DEERFIELD RIVER
FILE NAME: /str4/78d096/25 db2elernf.dgn	PLOT DATE: 16-JAN-2003
PROJECT MANAGER: R.WHITCOMB	DRAWN BY: J.GILMORE
DESIGNED BY: CH&A LLP	IPARM NAME: br230
BRIDGE SHEET NUMBER: BR230	SHEET 156 OF 435

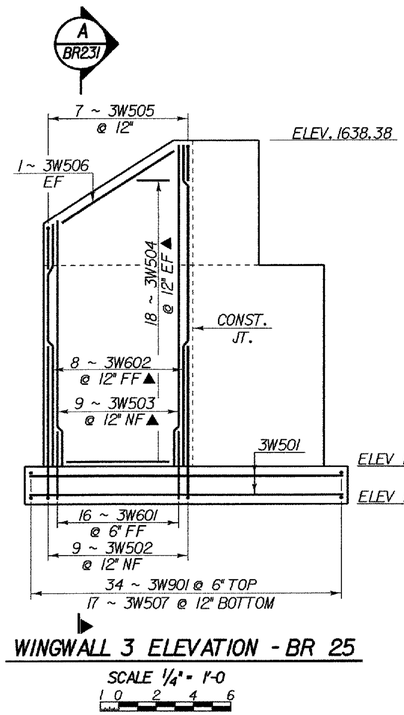

WINGWALL 3 ELEVATION - BR 25

SCALE 1/4" = 1'-0

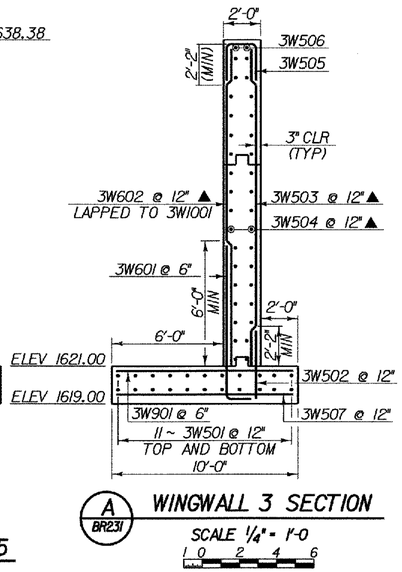

A BR231 WINGWALL 3 SECTION

SCALE 1/4" = 1'-0

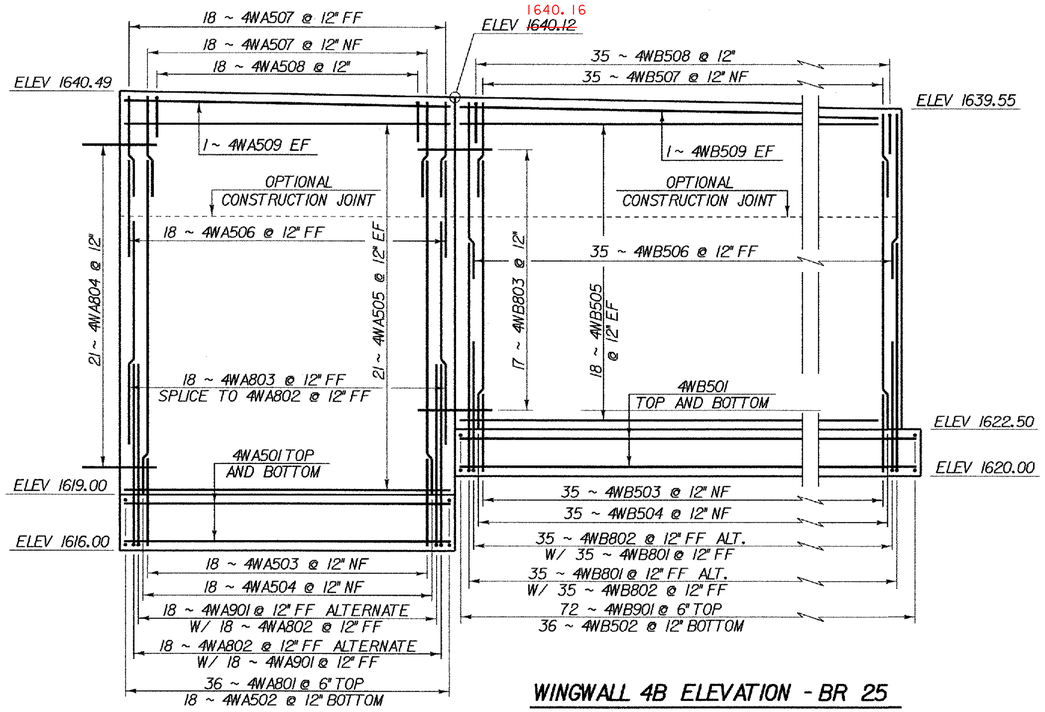

WINGWALL 4B ELEVATION - BR 25

SCALE 1/4" = 1'-0

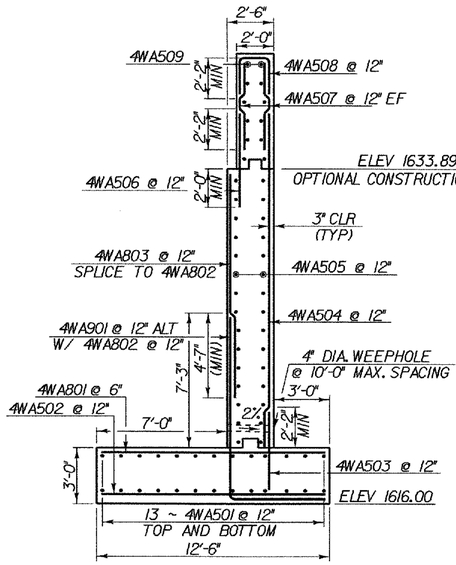

WINGWALL 4A SECTION - BR 25

SCALE 1/4" = 1'-0

WINGWALL 4A ELEVATION - BR 25

SCALE 1/4" = 1'-0

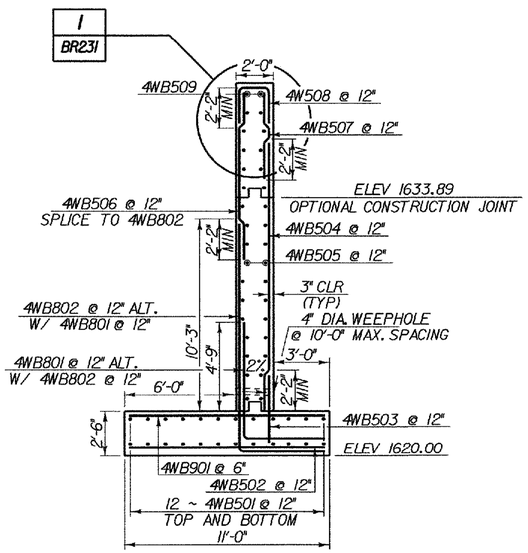

WINGWALL 4B SECTION - BR 25

SCALE 1/4" = 1'-0

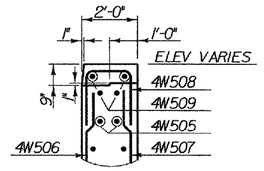

1 BR231 WINGWALL 4 CURB DETAIL

SCALE 3/8" = 1'-0

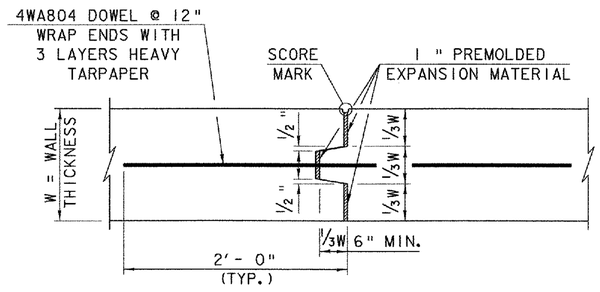

TYPICAL CONCRETE EXPANSION JOINT

(IN WALL ONLY. PAINT SIDE OF KEY WITH BITUMEN TO PREVENT BONDING.)

KEY:

NF = NEAR FACE
FF = FAR FACE
EF = EACH FACE
▲ = CUT TO FIT IN FIELD
3" CLR. UNLESS OTHERWISE SPECIFIED ON THE PLANS.

SHEET NAME:	ABUT 2 WINGWALL REINFORCING		
PROJECT NAME:	SEARSBURG	HIGHWAY NO.:	ROUTE 9
PROJECT NUMBER:	NH F 010-1(18)	BRIDGE NO.:	25
		OVER:	THE DEERFIELD RIVER
FILE NAME:	/str4/78d096/25 ab2elernf.dgn	PLOT DATE:	16-JAN-2003
PROJECT MANAGER:	R.WHITCOMB	DRAWN BY:	J.GILMORE
DESIGNED BY:	CH&A LLP	IPARM NAME:	br231
BRIDGE SHEET NUMBER:	BR231	SHEET	157 OF 435

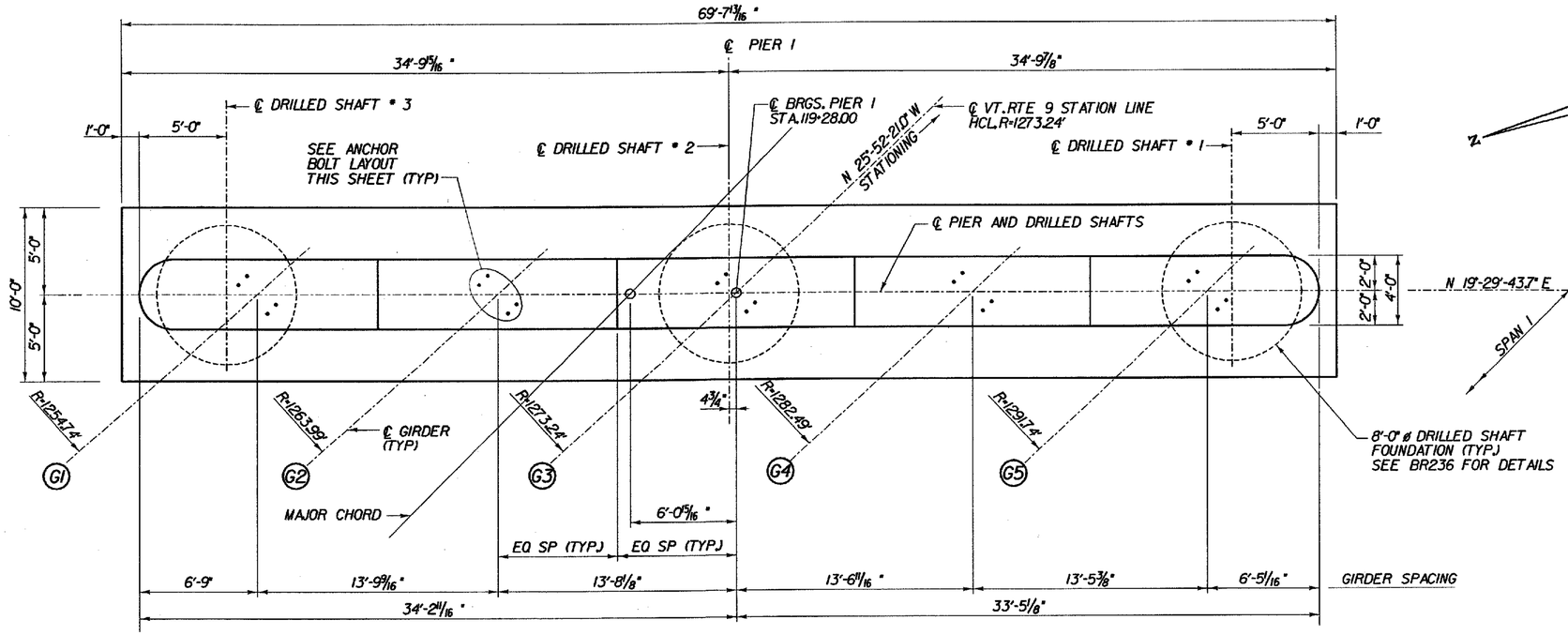

PIER 1 PLAN - BR 25

SCALE 1/4" = 1'-0

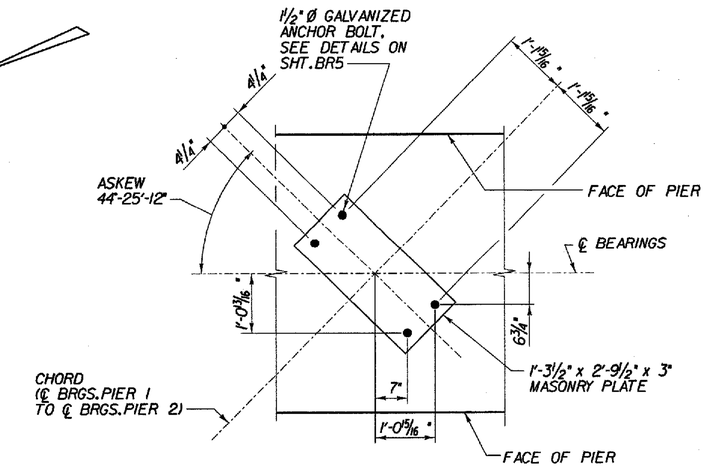

PIER 1 ANCHOR BOLT LAYOUT PLAN

SCALE 3/4" = 1'-0

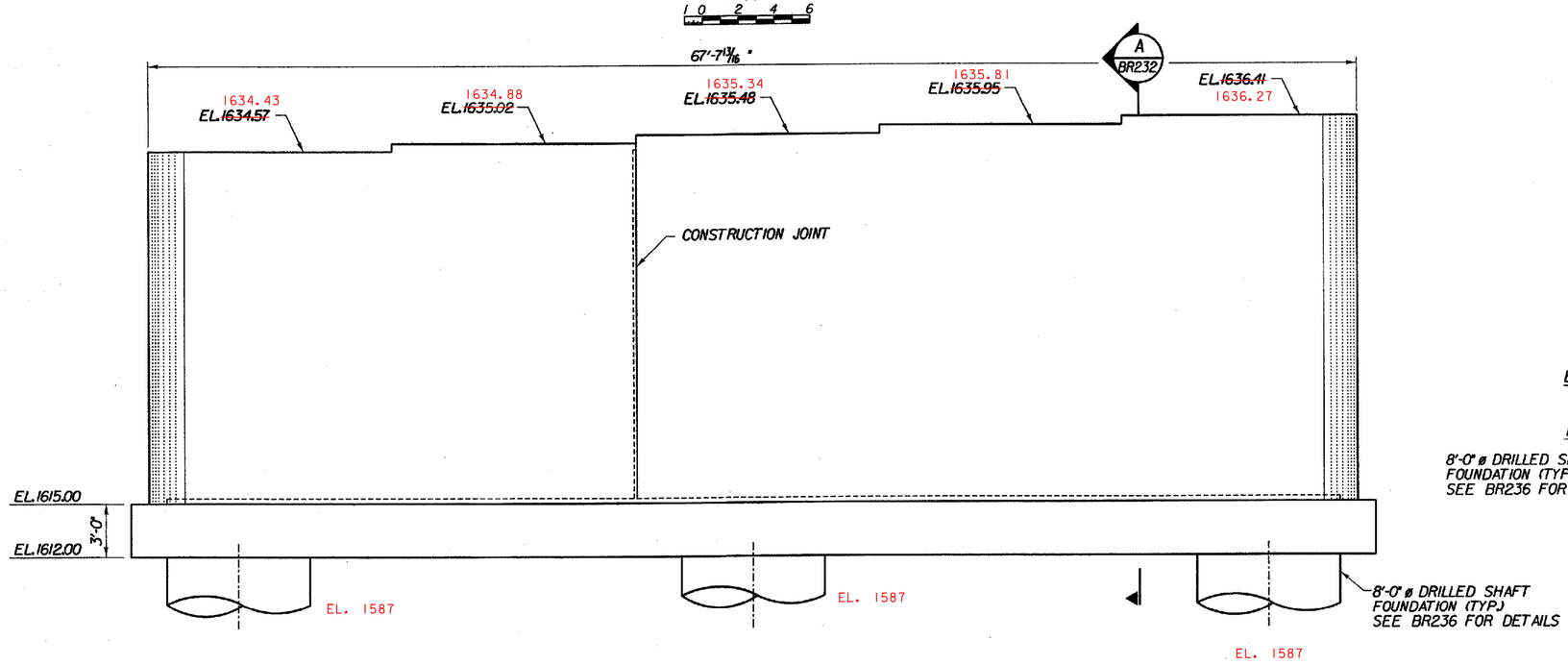

PIER 1 ELEVATION - BR 25

SCALE 1/4" = 1'-0

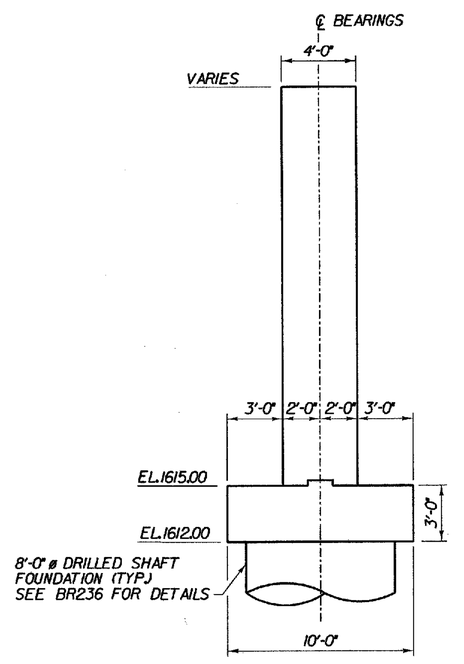

A BR232 PIER 1 SECTION

SCALE 1/4" = 1'-0

NOTES:

1. ANCHOR BOLTS SHALL CLEAR ALL REINFORCING STEEL IN THE PIER CAP.
2. FOR BEARING DETAIL SEE BRIDGE SHEET BR5 AND BR7.
3. FOR CONSTRUCTION JOINT DETAIL SEE BRIDGE SHEET BR15.

STATE OF VERMONT
AGENCY OF TRANSPORTATION

Town Of	SEARSBURG	Bridge No. 25	
		Log Sta.	
Highway No.	VT. RTE. 9	Surv. Sta.	
VT. RTE. 9 OVER DEERFIELD RIVER			
PIER 1 PLAN & ELEVATION - BR 25			
Designed By D. VIENI		Drawn by K. DETRICK/Wm WEATHERBY	
Checked By M. OLSTAD	Date 12/2001	Bridge Design Supervisor M. OLSTAD	Date 12/2001
PROJECT SEARSBURG - WILMINGTON		PROJECT NO. NHF 010-1(18)	
I.G.C. Info.			
Bridge Sheet No. BR232		Sheet 158 OF 435	

CLOUGH, HARBOUR & ASSOCIATES LLP
ENGINEERS, SURVEYORS, PLANNERS & LANDSCAPE ARCHITECTS
11 WINNERS CIRCLE ALBANY, NEW YORK, 12205

FILE NAME =U:\9755\MSTN\15\BRDG25\25_pier1.PLT
DATE/TIME =12/12/2001
USER =664

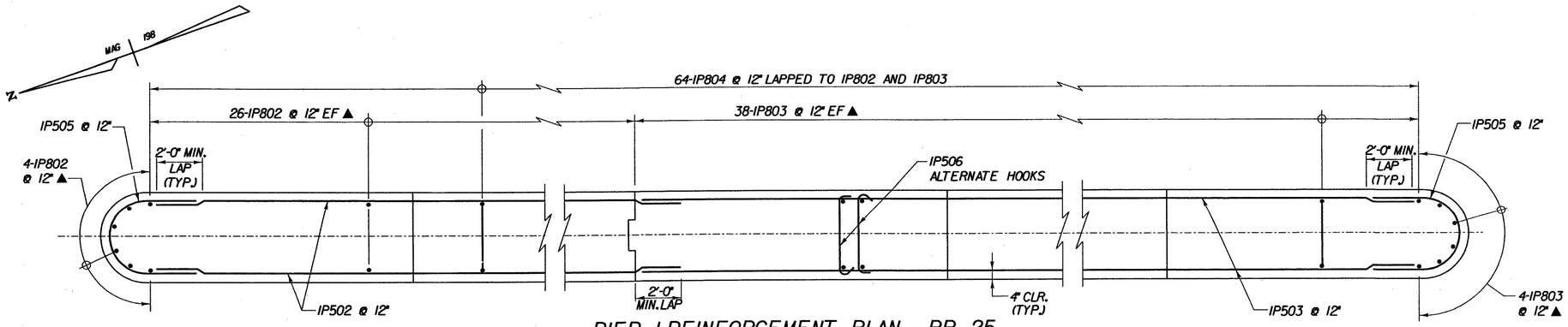

PIER I REINFORCEMENT PLAN - BR 25

SCALE 3/8" = 1'-0

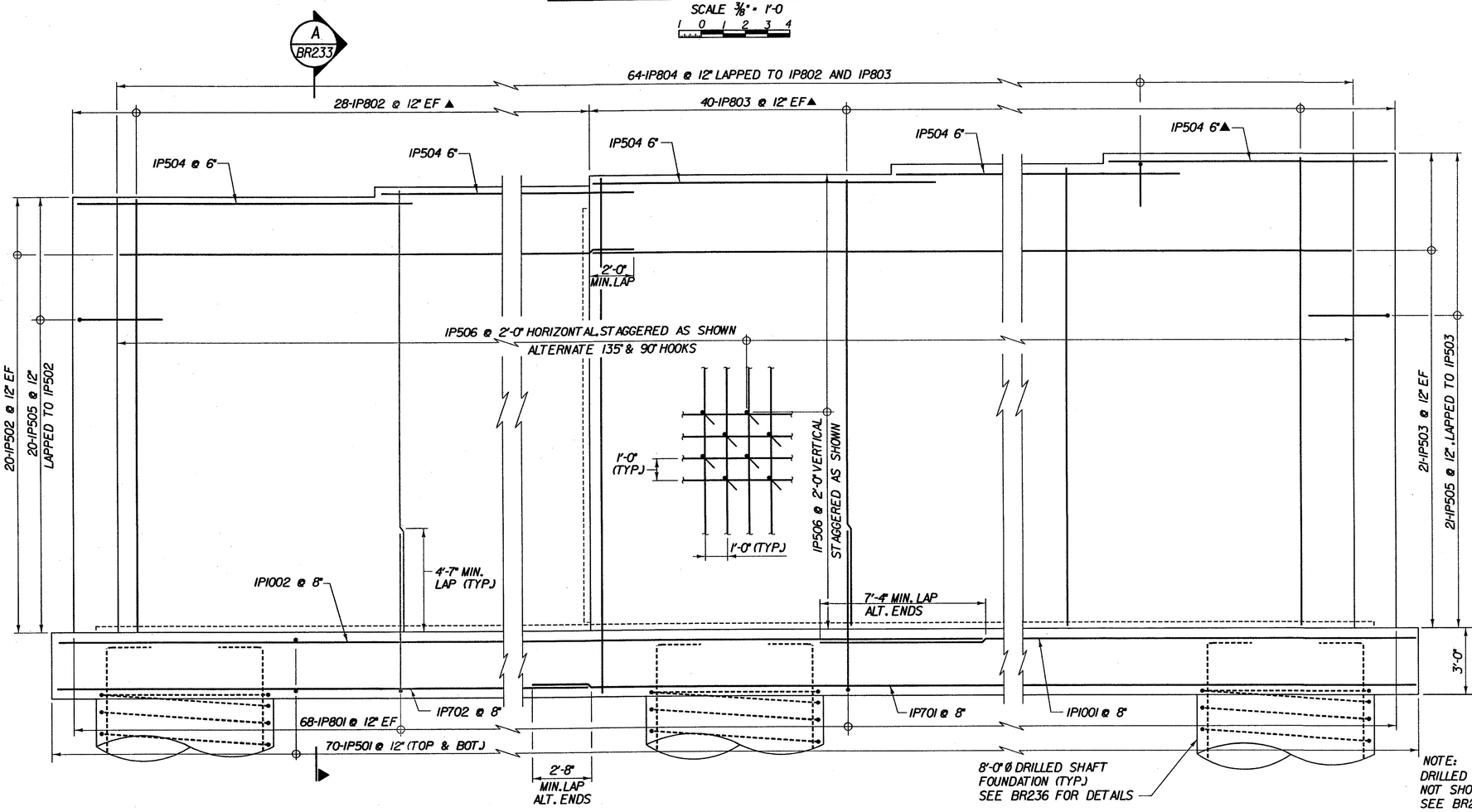

NOTE:
DRILLED SHAFT REINFORCING NOT SHOWN FOR CLARITY. SEE BR236 FOR DETAILS

PIER I REINFORCEMENT ELEVATION - BR 25

SCALE 3/8" = 1'-0

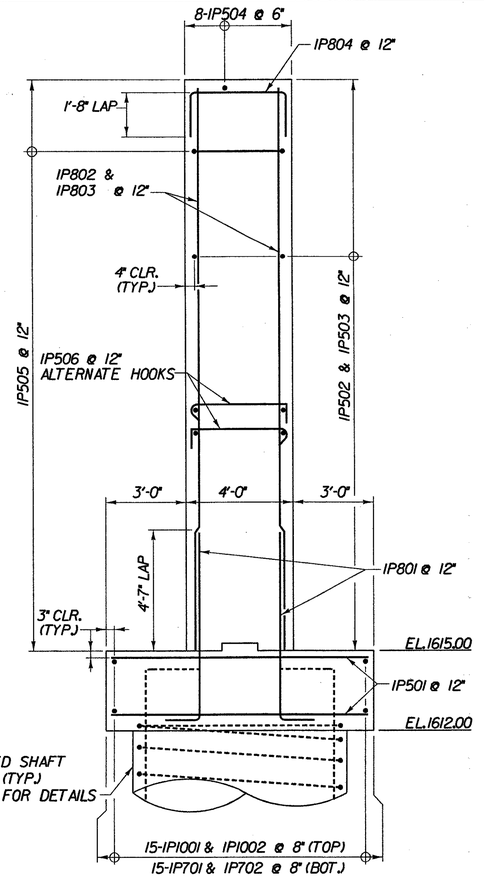

A BR233 PIER I REINFORCEMENT SECTION

SCALE 3/8" = 1'-0

KEY:
NF = NEAR FACE
FF = FAR FACE
EF = EACH FACE
▲ = CUT TO FIT IN FIELD
3" CLR. FOR FOOTINGS, 4" CLR. FOR PIER STEM & DRILLED SHAFTS UNLESS OTHERWISE SPECIFIED ON THE PLANS.

STATE OF VERMONT
AGENCY OF TRANSPORTATION

Town Of	SEARSBURG	Bridge No. 25
Highway No.	VT. RTE. 9	Log Sta.
		Surv. Sta.

VT. RTE. 9 OVER DEERFIELD RIVER

PIER I REINFORCING - BR 25

Designed By D. VIENI	Drawn by K. DETRICK/WmWEATHERBY
Checked By M. OLSTAD Date 12/2001	Bridge Design Supervisor M. OLSTAD Date 12/2001
PROJECT SEARSBURG - WILMINGTON	PROJECT NO. NHF 010-K(18)
I.G.C. Info.	
Bridge Sheet No. BR233	Sheet 159 OF 435

CHA CLOUGH, HARBOUR & ASSOCIATES LLP
ENGINEERS, SURVEYORS, PLANNERS & LANDSCAPE ARCHITECTS
8 WINNERS CIRCLE ALBANY, NEW YORK, 12205

FILE NAME = U:\9755\MSTN\15\BR0025\25_peri-enf.plt
DATE/TIME = 12/12/2001
USER = 6844

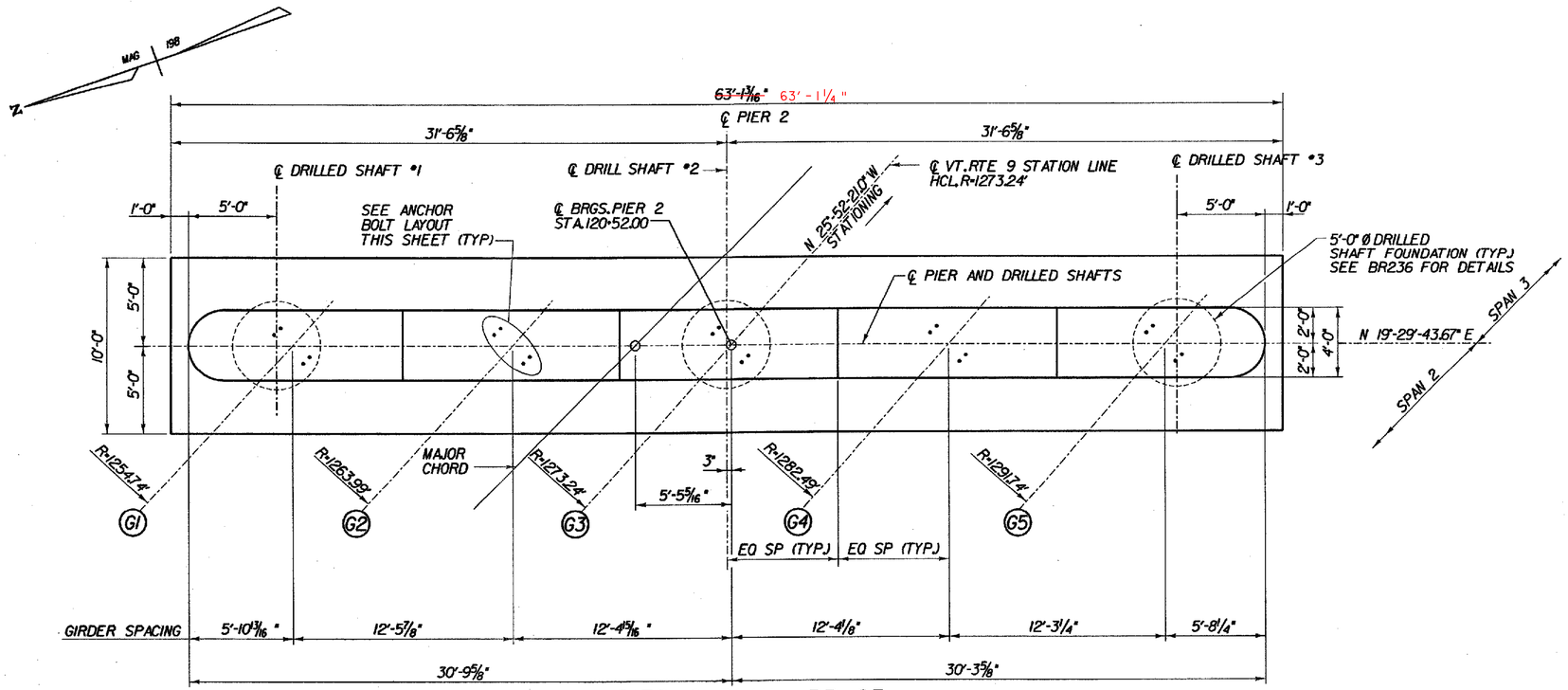

PIER 2 PLAN - BR 25

SCALE 1/4" = 1'-0

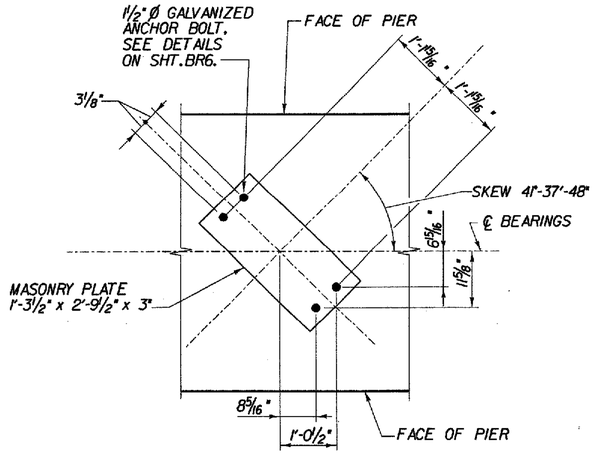

PIER 2 ANCHOR BOLT LAYOUT PLAN

SCALE 3/4" = 1'-0

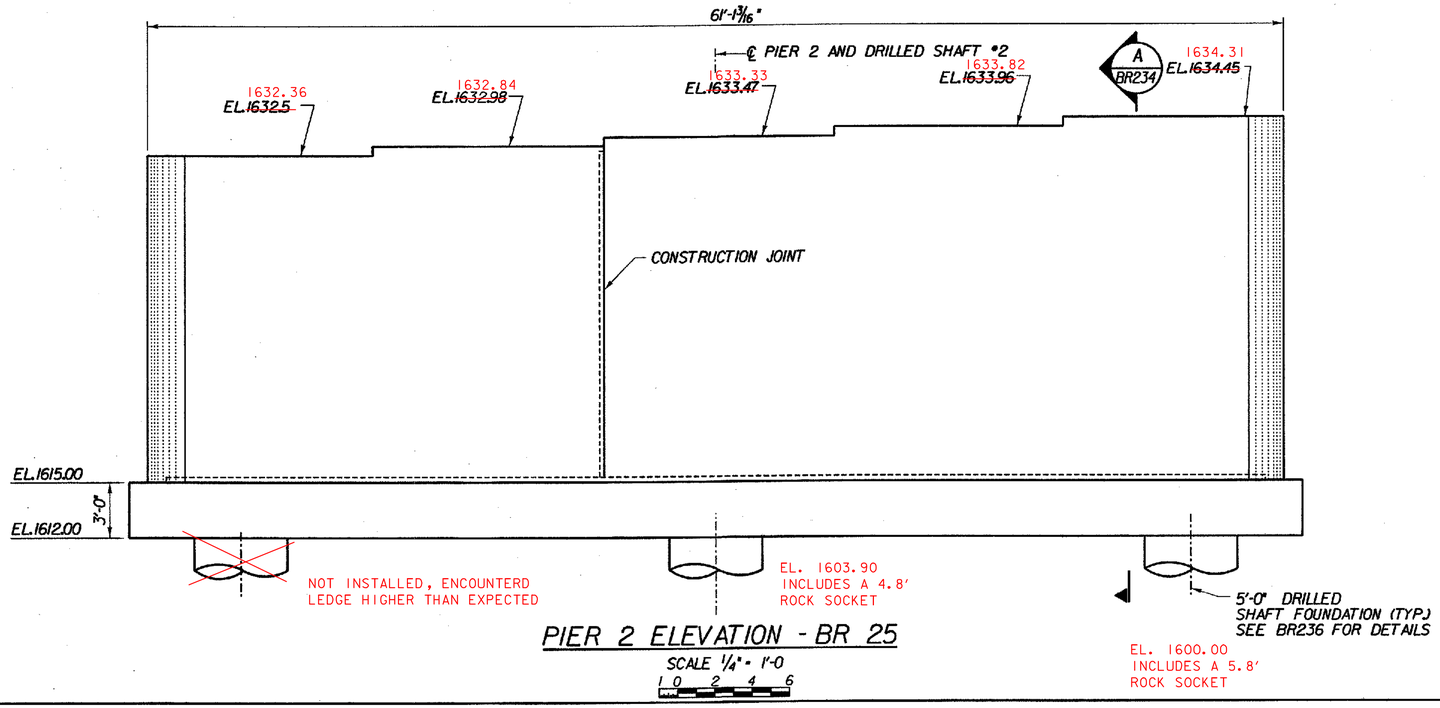

PIER 2 ELEVATION - BR 25

SCALE 1/4" = 1'-0

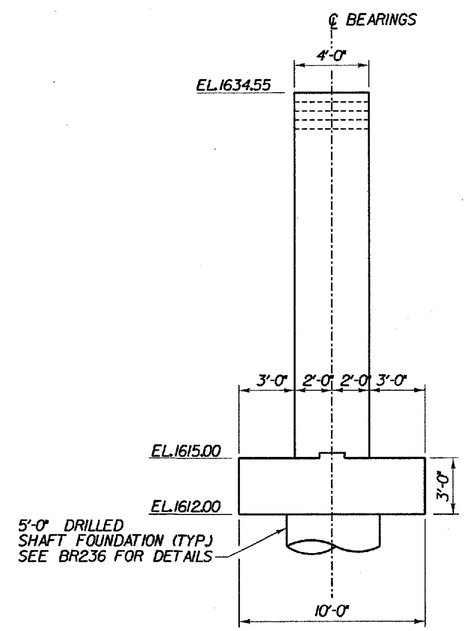

A BR234 PIER 2 SECTION

SCALE 1/4" = 1'-0

NOTES:

1. ANCHOR BOLTS SHALL CLEAR ALL REINFORCING STEEL IN THE PIER CAP.
2. FOR BEARING DETAIL SEE BRIDGE SHEET BR6 AND BR7.
3. FOR CONSTRUCTION JOINT DETAIL SEE BRIDGE SHEET BR15.

CLOUGH, HARBOUR & ASSOCIATES LLP
ENGINEERS, SURVEYORS, PLANNERS & LANDSCAPE ARCHITECTS
11 WINNERS CIRCLE ALBANY, NEW YORK, 12205

STATE OF VERMONT
AGENCY OF TRANSPORTATION

Town Of	SEARSBURG	Bridge No. 25	
Highway No.	VT. RTE. 9	Log Sta.	
		Surv. Sta.	
VT. RTE. 9 OVER DEERFIELD RIVER			
PIER 2 PLAN & ELEVATION - BR 25			
Designed By D. VIENI		Drawn by K. DETRICK	
Checked By M. OLSTAD	Date 12/2001	Bridge Design Supervisor M. OLSTAD	Date 12/2001
PROJECT SEARSBURG - WILMINGTON		PROJECT NO. NHF 010-1(18)	
I.G.C. Info.			
Bridge Sheet No. BR234		Sheet 160 OF 435	

FILE NAME =U:\9755\MSTN\15\BRDG25\25_pier2.PLT
DATE/TIME =12/12/2001
USER =664

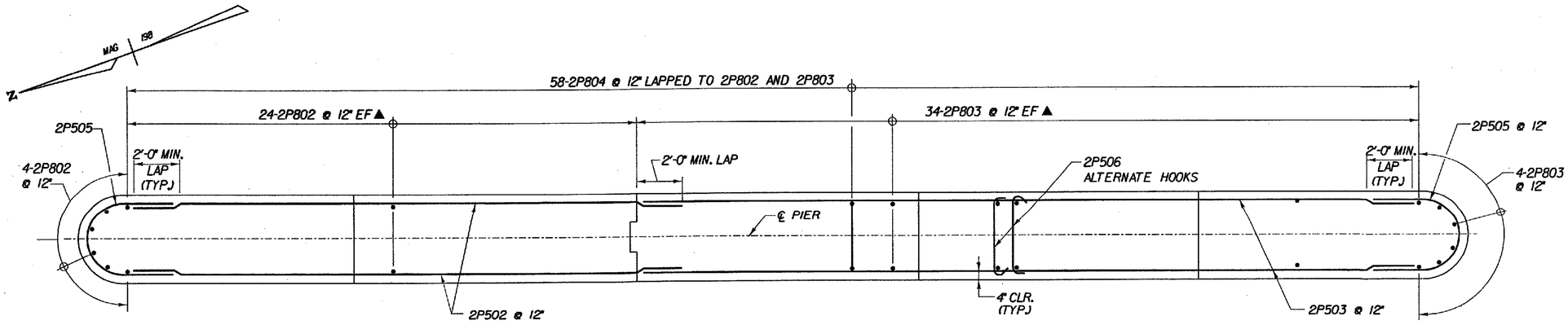

PIER 2 REINFORCEMENT PLAN - BR 25

SCALE 3/8" = 1'-0

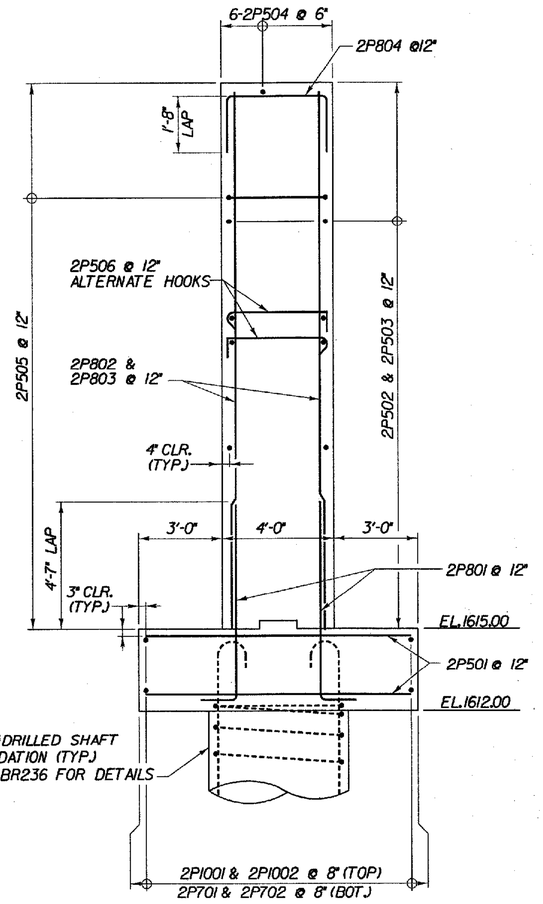

A BR235 PIER 2 REINFORCEMENT SECTION - BR25

SCALE 3/8" = 1'-0

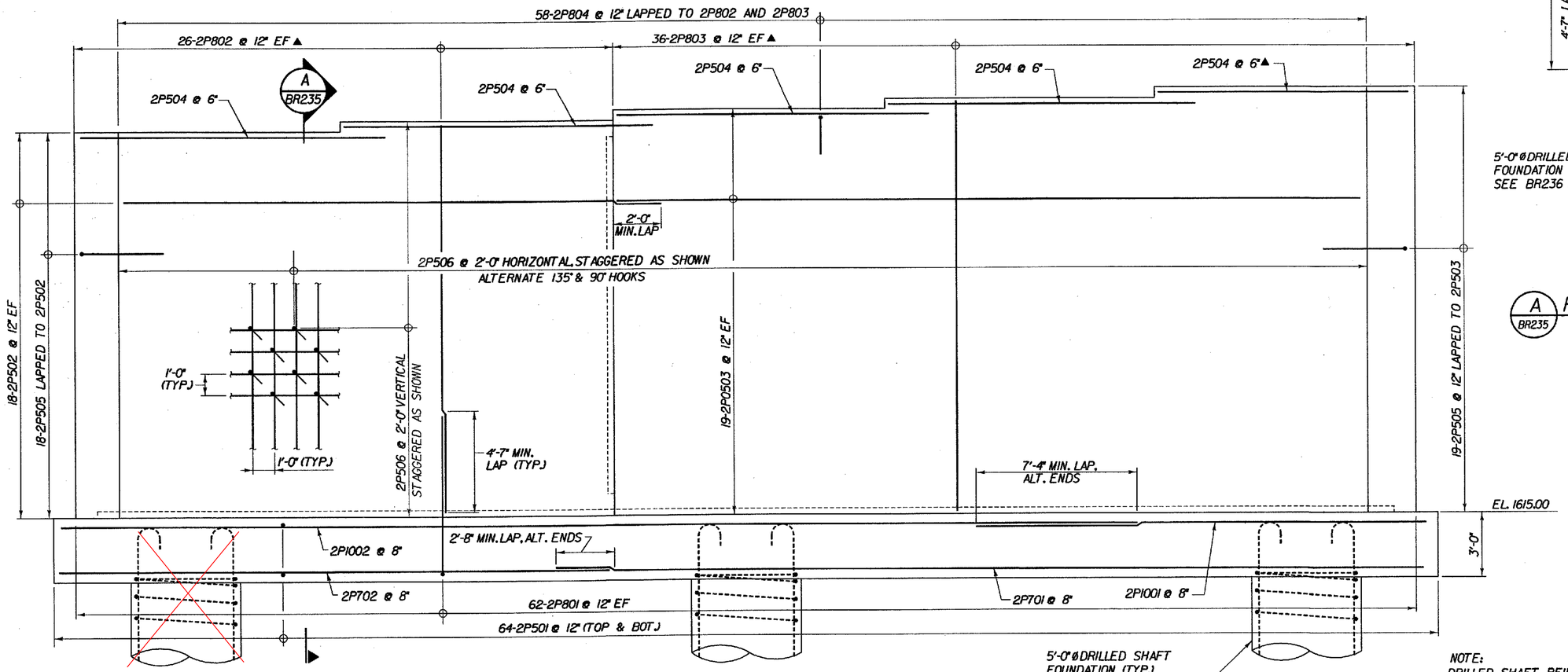

NOT INSTALLED, ENCOUNTERD LEDGE HIGHER THAN EXPECTED

PIER 2 REINFORCEMENT ELEVATION - BR 25

SCALE 3/8" = 1'-0

NOTE:
DRILLED SHAFT REINFORCING NOT SHOWN FOR CLARITY SEE BR236 FOR DETAILS

KEY:
NF = NEAR FACE
FF = FAR FACE
EF = EACH FACE
▲ = CUT TO FIT IN FIELD
3" CLR. FOR FOOTINGS, 4" CLR. FOR PIER STEM & DRILLED SHAFTS UNLESS OTHERWISE SPECIFIED ON THE PLANS.

STATE OF VERMONT
AGENCY OF TRANSPORTATION

Town Of	SEARSBURG	Bridge No. 25	
Highway No.	VT. RTE. 9	Log Sta.	
		Surv. Sta.	

VT. RTE. 9 OVER DEERFIELD RIVER

PIER 2 REINFORCING - BR 25

Designed By	D. VIENI	Drawn by	K. DETRICK / WmWEATHERBY
Checked By	M. OLSTAD Date 12/2001	Bridge Design Supervisor	M. OLSTAD Date 12/2001
PROJECT	SEARSBURG - WILMINGTON	PROJECT NO.	NHF 010-1(18)
I.G.C. Info.			
Bridge Sheet No.	BR235	Sheet	161 OF 435

CHA CLOUGH, HARBOUR & ASSOCIATES LLP
ENGINEERS, SURVEYORS, PLANNERS & LANDSCAPE ARCHITECTS
11 WINNERS CIRCLE ALBANY, NEW YORK, 12205

FILE NAME = U:\9755\MSTN\15\BR0025\25_pier2reinf.plt
DATE/TIME = 12/12/2001
USER = 664

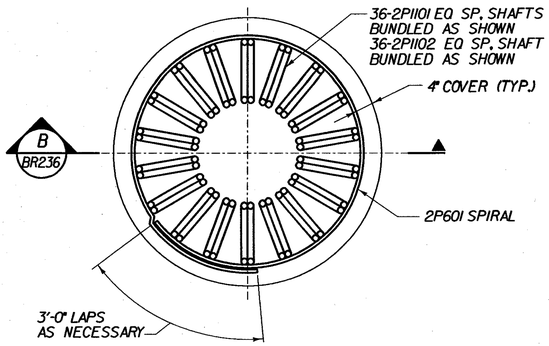

A BR236 5'-0"Ø DRILLED SHAFT SECTION

SCALE 3/4" = 1'-0

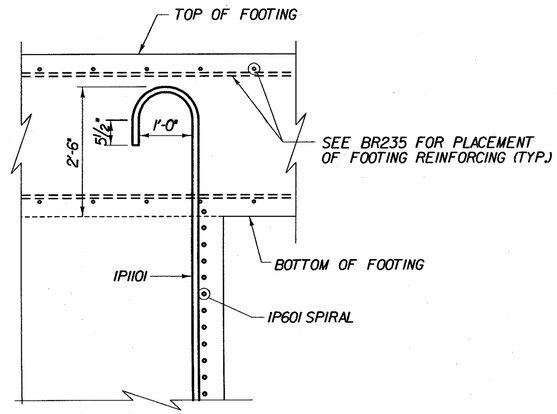

B BR236 5'-0"Ø DRILLED SHAFT SECTION

SCALE 3/4" = 1'-0

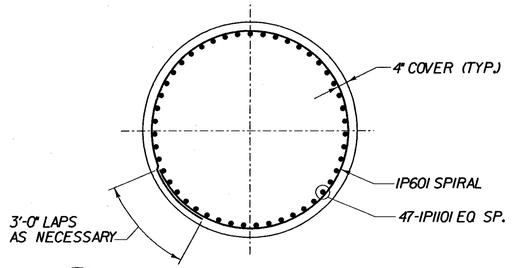

C BR236 8'-0" Ø DRILLED SHAFT SECTION

SCALE 3/8" = 1'-0

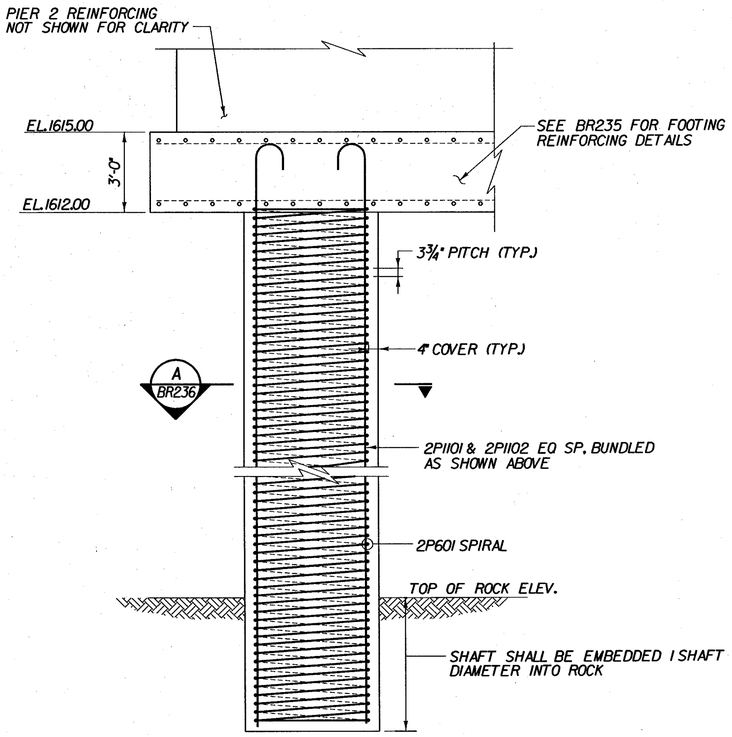

TYPICAL 5'-0"Ø DRILLED SHAFT - PIER 2

SCALE 3/8" = 1'-0

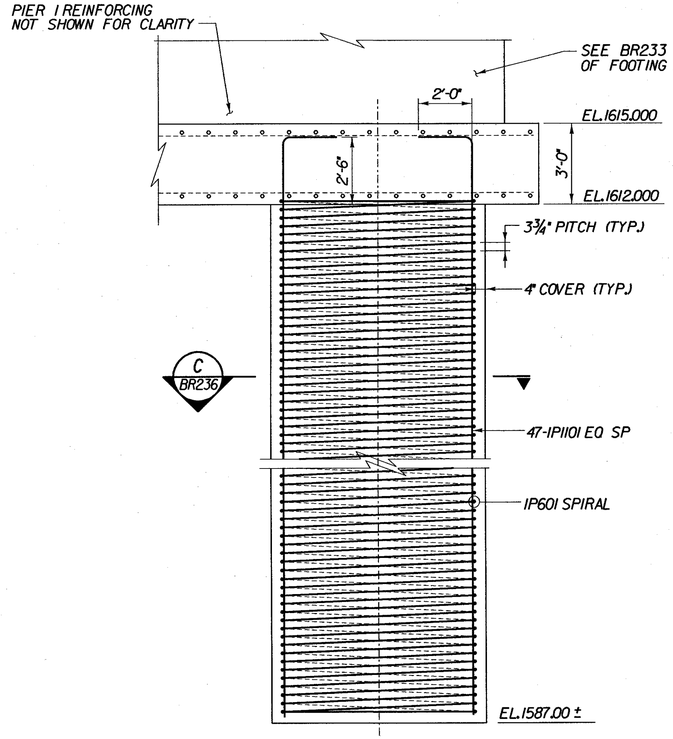

TYPICAL 8'-0"Ø DRILLED SHAFT - PIER 1

SCALE 3/8" = 1'-0

NOTES:

1. FOR DRILLED SHAFT NOTES SEE BRIDGE SHEET BR3.

KEY:

NF - NEAR FACE
FF - FAR FACE
EF - EACH FACE
▲ - CUT TO FIT IN FIELD

3" CLR. FOR FOOTINGS.
4" CLR. FOR PIER STEM & DRILLED SHAFTS UNLESS OTHERWISE SPECIFIED ON THE PLANS.

STATE OF VERMONT
AGENCY OF TRANSPORTATION

Town Of SEARSBURG	Bridge No. 25
Highway No. VT. RTE. 9	Log Sta. / Surv. Sta.
VT. RTE. 9 OVER DEERFIELD RIVER	
DRILLED SHAFT - BR 25	
Designed By D. VIENI	Drawn by K. DETRICK / WmWEATHERBY
Checked By M. OLSTAD Date 2/2002	Bridge Design Supervisor M. OLSTAD Date 2/2002
PROJECT SEARSBURG - WILMINGTON	PROJECT NO. NHF 010-1(18)
L.G.C. Info.	
Bridge Sheet No. BR236	Sheet 162 OF 435

CHA CLOUGH, HARBOUR & ASSOCIATES LLP
ENGINEERS, SURVEYORS, PLANNERS & LANDSCAPE ARCHITECTS
11 WINNERS CIRCLE ALBANY, NEW YORK, 12205

FILE NAME = u:\9755\MSTN\15\BRDG25\25_dr-shaft.DGN
DATE/TIME = 02/20/02
USER = 2225

ITEM	NO. PIECES	SIZE	LENGTH	MARK	TYPE	A	B	C	D	E	F	G	H	J	K	O	R
1	ABUTMENT 1																
2	48	5	33'-5	1A501	STR												
3	84	5	4'-2	1A502 △	STR												
4	37 ~~24~~	5	17'-2	1A503 ▲	STR												
5	34	5	31'-2	1A504	STR												
6	6	5	31'-2	1A505 ▲	STR												
7	72	5	10'-5	1A506	S10		8'-5	0'-9	1'-3								
8	72	5	8'-11	1A507	S10		2'-0	4'-11	2'-0								
9	20	5	14'-7	1A508 ▲	STR											14'-7	
10	74	5	9'-8	1A509	S10		2'-2	1'-9	5'-9								
11	8	5	31'-2	1A510 ▲	STR												
12	34	5	5'-2	E1A511	16		0	2'-5	2'-9				2'-0		2'-0		
13	15	5	4'-4	1A512	19		2'-2	2'-2	0				1'-3		1'-9	4'-0	
14	40	5	11'-0	1A513 ▲	STR												
15	15	5	4'-4	1A514	19		2'-2	2'-2	0				1'-3		1'-9	4'-0	
16	6	5	12'-0	1A515 ▲	19		6'-0	6'-0	0			3'-8"	~~2'-5~~	4'-9"	~~3'-5~~	~~9'-0~~	10'-9"
17	18	5	19'-4	1A516	14		2'-2	15'-0	2'-2				2'-0		0		
18	50	5	11'-0	1A517 ▲	STR												
19	25	5	4'-4	1A518	19		2'-2	2'-2	0				2'-0		2'-0	4'-2	
20	2	5	23'-7	1A519	STR												
21	24	5	8'-2	1A520 ▲	STR												
22	11	5	5'-10	1A521	S10		2'-2	1'-6	2'-2								
23	4	5	~~10'-0~~	1A522	19	7'-9"	~~5'-0~~	5'-0					2'-7		0'-11		
24	30	5	16'-3	1A523 ▲	STR		2'-9"										
25	17	5	15'-5	1A524	STR												
26	18	5	26'-0	1A525	STR												
27	18	5	27'-0	1A526	STR												
28	16	5	9'-6	1A527	STR												
29	16	5	13'-7	1A528	STR												
30	8	5	26'-8	1A529	STR												
31	8	5	13'-9	1A530	STR												
32	74	5	3'-5	1A531	STR												
33																	
34	74	6	10'-11	1A601 △	STR												
35																	
36	144	7	12'-5	1A701	2	1'-3	11'-9										
37	23	7	16'-11	1A702▲	STR												
38	30	7	16'-3	1A703	STR												
39	20	7	15'-5	1A704	STR												
40																	
41	72	8	10'-11	1A801▲	STR												
42																	
43	WINGWALL 1																
44																	
45	44	5	21'-2	1W501 ▲	STR												
46	68	5	4'-2	1W502 △	STR												
47	33	5	21'-8	1W503 ▲	STR												
48	45	5	32'-6	1W504 ▲	STR												
49	33	5	5'-10	1W505	S10		2'-2	1'-6	2'-2								
50	2	5	34'-0	1W506	STR												
51																	
52	44	6	9'-6	1W601 △	STR												
53																	
54	86	8	9'-6	1W801	STR												
55																	
56	66	10	10'-1	1W1001	2	1'-7	8'-9					0					
57	33	10	21'-8	1W1002	STR												
58																	
59																	
60	WINGWALL 2																
61																	
62	22	5	21'-5	2W501 ▲	STR												
63	20	5	4'-2	2W502 △	STR												
64	9	5	23'-6	2W503 ▲	STR												
65	50	5	8'-6	2W504 ▲	STR												
66	9	5	5'-10	2W505	S10		2'-2	1'-6	2'-2								
67	2	5	9'-9	2W506	STR												
68																	
69	22	6	9'-6	2W601▲	STR												
70																	
71	44	8	9'-6	2W801▲	STR												
72																	
73	19	10	10'-1	2W1001 △	2	1'-7	8'-9					0					
74	10	10	23'-6	2W1002▲	STR												
75																	
76																	
77																	
78	ABUTMENT 2			SEE REVISED SHEET													
79	48	5	27'-8	2A501	STR												
80	71	5	4'-2	2A502	STR												
81	26	5	21'-8	2A503 ▲	STR												
82	40	5	26'-0	2A504	STR												
83	6	5	26'-0	2A505 ▲	STR												
84	61	5	5'-3	2A506	STR												
85	55	5	8'-11	2A507	S10		2'-0	4'-11	2'-0								
86	20	5	14'-2	2A508 ▲	STR												
87	60	5	9'-1	2A509	S10		2'-2	1'-9	5'-9								
88	8	5	26'-0	2A510 ▲	STR												
89	27	5	5'-2	E2A511	16		0	2'-5	2'-9				2'-0		2'-0		
90	20	5	4'-4	2A512	19		2'-2	2'-2	0				1'-6	0	1'-6	3'-8	0
91	48	5	11'-0	2A513 ▲	STR												
92	20	5	5'-4	2A514	19		2'-2	3'-2	0				1'-6	0	1'-6	4'-8	0
93	4	5	12'-0	2A515 ▲	19		6'-0	6'-0	0				4'-3	0	4'-3	10	0
94	18	5	19'-4	2A516	14		2'-2	15'-0	2'-2				1'-2	1'-2			
95	48	5	11'-0	2A517 ▲	STR												
96	24	5	4'-4	2A518	19		2'-2	2'-2	0				1'-6	0	1'-6	3'-8	0
97																	

ITEM	NO. PIECES	SIZE	LENGTH	MARK	TYPE	A	B	C	D	E	F	G	H	J	K	O	R
98	ABUTMENT 2 (CONT.)				SEE REVISED SHEET												
99	2	5	23'-6	2A519	STR												
100	21	5	8'-0	2A520 ▲	STR												
101	9	5	5'-10	2A521	S10		2'-2	1'-6	2'-2								
102	7	5	9'-2	2A522 ▲	19		5'-2	4'-0	0				4'-8		2'-2	7'-5	
103	25	5	19'-2	2A523 ▲	STR												
104	21	5	18'-2	2A524 ▲	STR												
105	19	5	20'-2	2A525	STR												
106	19	5	21'-8	2A526	STR												
107	21	5	7'-8	2A527	STR												
108	21	5	10'-3	2A528	STR												
109	8	5	10'-4	2A529 ▲	STR												
110	8	5	20'-3	2A530 ▲	STR												
111	22	5	3'-8	2A531	S10		1'-8	2'-0									
112	1	5	4'-0	2A533	STR												
113	61	6	10'-11	2A601 △	STR												
114	115	7	12'-5	2A701 ▲	2		11'-9										
115	16	7	19'-8	2A702	STR												
116	25	7	19'-2	2A703	STR												
117	21	7	18'-2	2A704	STR												
118	61	8	11'-1	2A801 △	STR												
119																	
120																	
121																	
122	WINGWALL 3			SEE REVISED SHEET													
123	22	5	17'-0	3W501 ▲	STR												
124	16	5	4'-2	3W502 △	STR												
125	7	5	23'-6	3W503 ▲	STR												
126	48	5	9'-6	3W504 ▲	STR												
127	7	5	5'-10	3W505	S10		2'-2	1'-6	2'-2								
128	2	5	8'-5	3W506	STR												
129																	
130	18	6	9'-6	3W601 ▲	STR												
131																	
132	34	8	9'-6	3W801 ▲	STR												
133																	
134	15	10	10'-1	3W1001 △	2	1'-7	8'-9										
135	7	10	23'-6	3W1002 ▲	STR												
136																	
137																	
138	WINGWALL 4			SEE REVISED SHEET													
139	44	5	33'-0	4W501 ▲	STR											33'-0	
140	108	5	4'-2	4W502 △	STR											3'-5	
141	53	5	25'-6	4W503 ▲	STR											25'-6	
142	108	5	28'-2	4W504 ▲	STR											28'-2	
143	53	5	5'-10	4W505	S10		2'-2	1'-6	2'-2								
144	4	5	28'-9	4W506	STR											28'-9	
145																	
146	62	6	9'-6	4W601 ▲	STR												
147																9'-6	
148	126	8	9'-6	4W801 △	STR												
149																9'-6	
150	106	10	10'-1	4W1001	2	1'-7	8'-9										
151	53	10	26-0	4W1002 ▲	STR												
152																26'-0	
153																	
154																	
155	PIER 1																
156	142	5	9'-6"	1P501 △	STR.												
157	40	5	27'-5"	1P502	STR.												
158	42	5	38'-3"	1P503	STR.												
159	40	5	15'-9"	1P504	STR.												
160	41	5	9'-3"	1P505	10	2'-0"	5'-3"	2'-0"								3'-4"	1'-8"
161	693	5	4'-4½"	1P508	ALT HOOK	5½"	3'-5"					6"					
162																	
163	105	6	60'-0"	1P601	SPIRAL												
164																	
165	15	7	43'-6"	1P701	STR.												
166	17	7	28'-4"	1P702 △	STR.												
167																	
168	136	8	8'-8"	1P801	2	1'-4"	7'-4"										
169	56	8	19'-9"	1P802	STR.												
170	80	8	21'-1"	1P803	STR.												
171	64	8	6'-7"	1P804	2	1'-8"	3'-3"					1'-8"					
172																	
173	15	10	24'-1"	1P1001	STR.												
174	15	10	52'-5"	1P1002	STR.												
175																	
176	141	11	29'-6"	1P1101	2	2'-0"	27'-6"										
177																	
178																	
179																	
180																	
181																	
182																	
183																	
184																	
185																	
186																	
187																	
188																	
189																	
190																	
191																	
192																	
193																	
194																	

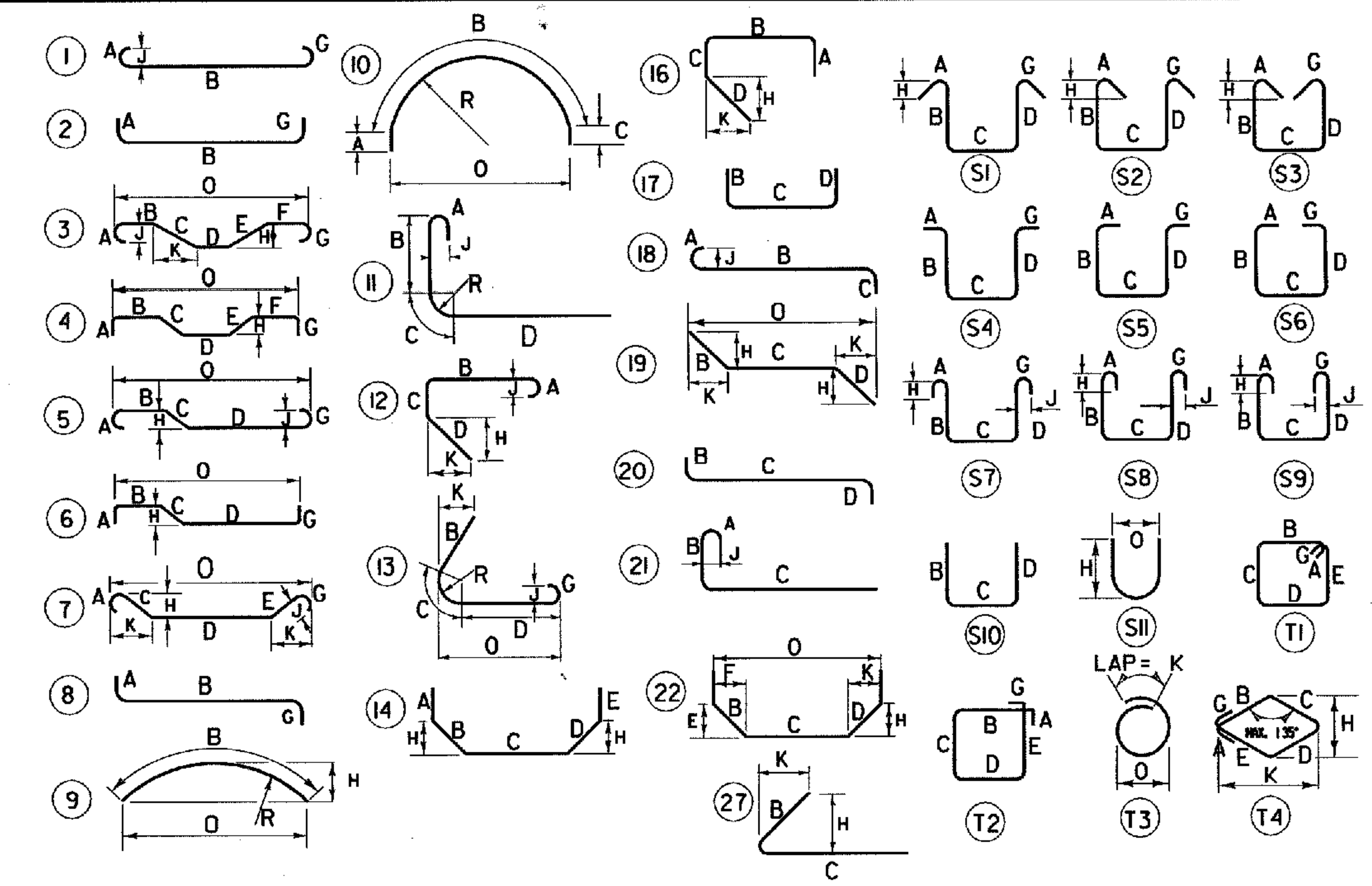

ASTM STANDARD REINFORCING BARS

BAR SIZE DESIGNATION	WEIGHT POUNDS PER FOOT	NOMINAL DIMENSIONS ROUND SECTION		
		DIAMETER INCHES	CROSS SECTIONAL AREA SQ. INCHES	PERIMETER INCHES
#3	.376	.375	.11	1.178
#4	.668	.500	.20	1.571
#5	1.043	.625	.31	1.963
#6	1.502	.750	.44	2.356
#7	2.044	.875	.60	2.749
#8	2.670	1.000	.79	3.142
#9	3.400	1.128	1.00	3.544
#10	4.303	1.270	1.27	3.990
#11	5.313	1.410	1.56	4.430
#14	7.65	1.693	2.25	5.32
#18	13.60	2.257	4.00	7.09

NOTES:

1. UNLESS OTHERWISE DESIGNATED, ALL BAR REINFORCEMENT FOR CONCRETE IN SIZES UP TO AND INCLUDING NO. 18 SHALL CONFORM TO THE REQUIREMENTS OF THE "SPECIFICATIONS FOR DEFORMED BILLET-STEEL BARS FOR CONCRETE REINFORCEMENT", AASHTO M 31(ASTM A 615-SI). ALL BARS SHALL BE GRADE 60, UNLESS OTHERWISE DESIGNATED.
2. FOR TYPICAL BENDING DETAILS, RECOMMENDED PIN DIAMETER "D" OF BENDS AND HOOKS, AND OTHER STANDARD PRACTICE, SEE CURRENT CONCRETE REINFORCING STEEL INSTITUTE "MANUAL OF STANDARD PRACTICE".
3. BARS WHICH REQUIRE MORE ACCURATE BENDING THAN STANDARD PRACTICES SHOULD HAVE LIMITS INDICATED.
4. ALL DIMENSIONS ARE OUT TO OUT OF BAR EXCEPT "A" AND "G" ON STANDARD 180 DEGREE AND 135 DEGREE HOOKS.
5. "J" DIMENSION ON 180 DEGREE HOOKS TO BE SHOWN ONLY WHERE NECESSARY TO RESTRICT HOOK SIZE. OTHERWISE, STANDARD HOOKS ARE TO BE USED.
6. "H" DIMENSION ON STIRRUPS TO BE SHOWN ONLY WHEN NECESSARY TO MAINTAIN CLEARANCES.
7. WHERE SLOPE DIFFERS FROM 45 DEGREES, DIMENSIONS "H" AND "K" MUST BE SHOWN.
8. ▲ DENOTES BARS TO BE CUT IN FIELD.
9. ♦ DENOTES BARS TO BE BENT IN FIELD.
10. ✳ DENOTES ONE EXTRA BAR ADDED FOR TESTING PURPOSES.
11. △ DENOTES TWO EXTRA BARS ADDED FOR TESTING PURPOSES.
12. "E" IN PREFIX DENOTES EPOXY COATED REINFORCING STEEL.

CLOUGH, HARBOUR & ASSOCIATES LLP
ENGINEERS, SURVEYORS, PLANNERS & LANDSCAPE ARCHITECTS
III WINNERS CIRCLE ALBANY, NEW YORK, 12205

STATE OF VERMONT
AGENCY OF TRANSPORTATION

Town Of SEARSBURG		Bridge No. 25
		Log Sta.
Highway No. VT. RTE. 9		Surv. Sta.
VT. RTE. 9 OVER DEERFIELD RIVER		
REINFORCING STEEL SCHEDULE I - BR 25		
Designed By D. VIENI	Drawn by Wm WEATHREBY	
Checked By M. OLSTAD Date 2/2002	Bridge Design Supervisor M. OLSTAD Date 2/2002	
PROJECT SEARSBURG - WILMINGTON		PROJECT NO. NHF 010-1(18)
I.G.C. Info.		
Bridge Sheet No. BR240		Sheet 163 OF 435

FILE NAME =u:\9755\MSTN\15\BRDG25\25_barlist.DGN
DATE/TIME =02/20/02
USER =2225

STATE OF VERMONT
AGENCY OF TRANSPORTATION

REINFORCING STEEL SCHEDULE

	EACH	SIZE	LENGTH	MARK	TYPE	A	B	C	D	E	F	G	H	J	K	R	O
	ABUTMENT #2																
	72	5	21'- 3"	2A501	STR												
	72	5	3'- 11"	2A502	STR												
▲	26	5	19'- 8"	2A503	STR												
	40	5	28'- 2"	2A504	STR												
▲	6	5	28'- 2"	2A505	STR												
	61	5	6'- 7"	2A506	S10		2'- 0"	0'- 9"	3'- 10"								
	55	5	9'- 0"	2A507	S10		2'- 0"	5'- 0"	2'- 0"								
▲	20	5	11'- 6"	2A508	STR												
	55	5	6'- 1"	2A509	S10		3'- 4"	1'- 9"	1'- 0"								
	8	5	28'- 2"	2A510	STR												
	27	5	5'- 3"	E2A511	16	---	---	2'- 5"	2'- 10"				2'- 0"		2'- 0"		
	50	5	4'- 4"	2A512	19		2'- 2"	2'- 2"	---				2'- 0"		0'- 11"		---
	50	5	10'- 7"	2A513	STR												
	2	5	6'- 7"	2A514	S10		2'- 2"	2'- 3"	2'- 2"								
▲	6	5	28'- 2"	2A515	STR												
	11	5	19'- 9"	2A516	14	---	2'- 2"	15'- 5"	2'- 2"	---			1'- 2"		1'- 10"		
▲	36	5	9'- 9"	2A517	STR												
	18	5	4'- 4"	2A518	19		2'- 2"	2'- 2"	---				2'- 0"		0'- 11"		---
	4	5	10'- 7"	2A519	STR												
	24	5	6'- 4"	2A520	STR												
	4	5	5'- 10"	2A521	S10		2'- 2"	1'- 6"	2'- 2"								
	6	5	8'- 6"	2A522	19		4'- 4"	4'- 2"	---				3'- 11"		1'- 10"		---
▲	25	5	19'- 1"	2A523	STR												
▲	21	5	11'- 2"	2A524	STR												
	11	5	20'- 3"	2A525	STR												
	12	5	22'- 3"	2A526	STR												
	21	5	8'- 4"	2A527	STR												
	21	5	12'- 0"	2A528	STR												
	8	5	10'- 10"	2A529	STR												
	8	5	21'- 9"	2A530	STR												
	NOT USED			2A531													
	55	5	4'- 2"	2A532	STR												
	3	5	4'- 2"	2A533	STR												
	60	6	10'- 11"	2A601	STR												
	118	7	13'- 6"	2A701	2	2'- 0"	11'- 6"					---					
	16	7	22'- 1"	2A702	STR												
	25	7	15'- 3"	2A703	STR												
)	23	7	7'- 3"	2A704	STR												
	60	8	10'- 11"	2A801	STR												
	WINGWALL #3																
	22	5	16'- 10"	3W501	STR												
)	11	5	4'- 0"	3W502	STR												
▲	9	5	17'- 0"	3W503	STR												
▲	36	5	7'- 6"	3W504	STR												
	7	5	5'- 10"	3W505	S10		2'- 2"	1'- 6"	2'- 2"								
	2	5	8'- 3"	3W506	STR												
	17	5	9'- 6"	3W507	STR												
)	18	6	9'- 9"	3W601	17		2'- 0"	7'- 9"	---								
▲	8	6	17'- 0"	3W602	STR												
)	36	9	9'- 6"	3W901	STR												
	WINGWALL #4A																
	26	5	17'- 6"	4WA501	STR												
	18	5	12'- 0"	4WA502	STR												
	18	5	5'- 0"	4WA503	STR												
	18	5	17'- 6"	4WA504	STR												
	21	5	17'- 9"	4WA505	STR												
	18	5	4'- 6"	4WA506	STR												
	36	5	6'- 0"	4WA507	STR												
	18	5	5'- 10"	4WA508	S10		2'- 2"	1'- 6"	2'- 2"								
	2	5	17'- 9"	4WA509	STR												
	36	8	12'- 0"	4WA801	STR												
	18	8	14'- 6"	4WA802	17		4'- 6"	10'- 0"	---								
	18	8	12'- 0"	4WA803	STR												
)	23	8	4'- 0"	4WA804	STR												
	18	9	14'- 6"	4WA901	17		4'- 6"	10'- 0"	---								

ITEM	EACH	SIZE	LENGTH	MARK	TYPE	A	B	C	D	E	F	G	H	J	K	R	O
	WINGWALL #4B																
	24	5	35'- 4"	4WB501	STR												
	36	5	10'- 6"	4WB502	STR												
	35	5	4'- 6"	4WB503	STR												
	35	5	14'- 2"	4WB504	STR												
	36	5	34'- 3"	4WB505	STR												
	35	5	9'- 4"	4WB506	STR												
	35	5	5'- 5"	4WB507	STR												
	35	5	5'- 10"	4WB508	S10		2'- 2"	1'- 6"	2'- 2"								
	2	5	34'- 4"	4WB509	STR												
	35	8	11'- 6"	4WB801	17		4'- 6"	7'- 0"	---								
	35	8	17'- 0"	4WB802	17		4'- 6"	12'- 6"	---								
	17	8	4'- 0"	4WB803	STR												
	72	9	10'- 6"	4W901	STR												

~ NOTES ~

1. UNLESS OTHERWISE DESIGNATED, ALL BAR REINFORCEMENT FOR CONCRETE IN SIZES UP TO AND INCLUDING NO. 18 SHALL CONFORM TO THE REQUIREMENTS OF THE "SPECIFICATIONS FOR DEFORMED BILLET-STEEL BARS FOR CONCRETE REINFORCEMENT", AASHTO M 31 (ASTM A 615-SI). ALL BARS SHALL BE GRADE 60, UNLESS OTHERWISE DESIGNATED.
2. FOR TYPICAL BENDING DETAILS, RECOMMENDED PIN DIAMETER "D" OF BENDS AND HOOKS, AND OTHER STANDARD PRACTICE, SEE CURRENT CONCRETE REINFORCING STEEL INSTITUTE "MANUAL OF STANDARD PRACTICE".
3. BARS WHICH REQUIRE MORE ACCURATE BENDING THAN STANDARD PRACTICES SHOULD HAVE LIMITS INDICATED.
4. ALL DIMENSIONS ARE OUT TO OUT OF BAR EXCEPT "A" AND "G" ON STANDARD 180 DEGREE AND 135 DEGREE HOOKS.
5. "J" DIMENSION ON 180 DEGREE HOOKS TO BE SHOWN ONLY WHERE NECESSARY TO RESTRICT HOOK SIZE. OTHERWISE, STANDARD HOOKS ARE TO BE USED.
6. "H" DIMENSION ON STIRRUPS TO BE SHOWN ONLY WHEN NECESSARY TO MAINTAIN CLEARANCES.
7. WHERE SLOPE DIFFERS FROM 45 DEGREES, DIMENSIONS "H" AND "K" MUST BE SHOWN.
8. ▲ DENOTES BARS TO BE CUT IN FIELD.
9. ♦ DENOTES ONE EXTRA BAR ADDED FOR TESTING PURPOSES.
10.) DENOTES TWO EXTRA BARS ADDED FOR TESTING PURPOSES.
11. "E" IN PREFIX DENOTES EPOXY COATED REINFORCING STEEL.

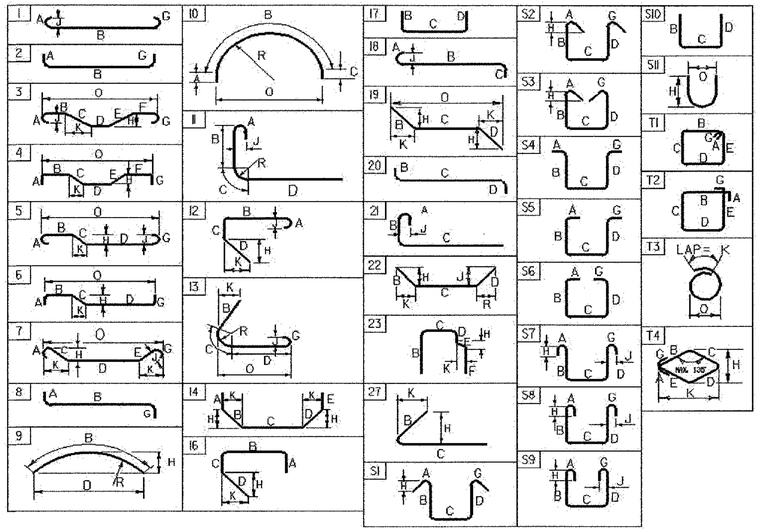

ASTM STANDARD REINFORCING BARS

BAR SIZE DESIGNATION	WEIGHT POUNDS PER FOOT	NOMINAL DIMENSIONS ROUND SECTION DIAMETER INCHES	AREA INCHES^2	PERIMETER INCHES
#3	0.376	0.375	0.11	1.178
#4	0.668	0.500	0.20	1.571
#5	1.043	0.625	0.31	1.963
#6	1.502	0.750	0.44	2.356
#7	2.044	0.875	0.60	2.749
#8	2.670	1.000	0.79	3.142
#9	3.400	1.128	1.00	3.544
#10	4.303	1.270	1.27	3.990
#11	5.313	1.410	1.56	4.430
#14	7.65	1.693	2.25	5.32
#18	13.60	2.257	4.00	7.09

BRIDGE #25

PROJECT NAME: **SEARSBURG-WILMINGTON**
PROJECT NUMBER: **NH F 010-1(18)**

FILE NAME: **SD096RSS.xls**
PROJECT LEADER: **R.WHITCOMB**
DESIGNED BY: **R.WHITCOMB**
REINFORCING STEEL SCHEDULE BR240A

PLOT DATE: **1/16/2003**
DRAWN BY: **J.GILMORE**
CHECKED BY: **R.WHITCOMB**
SHEET **163A** OF **435**

ITEM	NO. PIECES	SIZE	LENGTH	MARK	TYPE	A	B	C	D	E	F	G	H	J	K	O	R
1	PIER 2																
2	130	5	9'-6"	2P501 △	STR.												
3	36	5	24'-7"	2P502	STR.												
4	38	5	34'-6"	2P503	STR.												
5	40	5	14'-6"	2P504	STR.												
6	37	5	9'-3"	2P505	10	2'-0"	5'-3"	2'-0"								3'-4"	1'-8"
7	570	5	4'-4½"	2P508	ALT HOOK	5½"	3'-5"					6"					
8																	
9	48	6	60'-0"	2P601	SPIRAL												
10																	
11	15	7	37'-8"	2P701	STR.												
12	17	7	27'-7"	2P702 △	STR.												
13																	
14	124	8	8'-8"	2P801	2	1'-4"	7'-4"										
15	52	8	17'-9"	2P802	STR.												
16	72	8	19'-2"	2P803	STR.												
17	58	8	6'-7"	2P804	2	1'-8"	3'-3"					1'-8"					
18																	
19	15	10	25'-7"	2P1001	STR.												
20	15	10	44'-4"	2P1002	STR.												
21																	
22	72	11	20'-1"	2P1101	1	1'-7"	18'-6"										
23	36	11	28'-1"	2P1102	1	1'-7"	26'-6"										
24																	
25																	
26	APPROACH SLAB 1																
27	102	5	31'-7	E1AS501 △▲	STR												
28	84	9	25'-6	E1AS901 △▲	STR												
29																	
30																	
31	APPROACH SLAB 2																
32	106	5	26'-3	E2AS501 △▲	STR												
33	70	9	26'-4	E2AS901 △▲	STR												
34																	
35																	
36	DECK SLAB																
37	543	5	42'-6	ES501 ▲	STR												
38	216	5	40'-0	ES502	STR												
39	36	5	22'-9	ES503 ▲	STR												
40	491	5	5'-11	ES505	S5	0'-11½	1'-6¾	1'-5	1'-6¾			0'-11½					
41	16	5	2'-6	ES507 △▲	STR												
42	32	5	7'-5	ES508 ▲	STR												
43	10	5	31'-3	ES509	STR												
44	60	5	40'-0	ES510	STR												
45	11	5	20'-2	ES511 △	STR												
46	38	5	5'-9	ES512	T2	0	2'-6	0'-8½	1'-10	0'-8½		0					
47	38	5	9'-9	ES513	T2	0	5'-10	0'-8½	3'-10	0'-8½		0					
48																	
49	543	6	42'-6	ES601 ▲	STR												
50	362	6	40'-0	ES602 △	STR												
51	61	6	21'-2	ES603 ▲	STR												
52	108	6	40'-6	ES604	STR												
53	108	6	29'-4	ES605	STR												
54																	
55																	
56																	
57																	
58																	
59																	
60																	
61																	
62																	
63																	
64																	
65																	
66																	
67																	
68																	
69																	
70																	
71																	
72																	
73																	
74																	
75																	
76																	
77																	
78																	
79																	
80																	
81																	
82																	
83																	
84																	
85																	
86																	
87																	
88																	
89																	
90																	
91																	
92																	
93																	
94																	
95																	
96																	
97																	

ITEM	NO. PIECES	SIZE	LENGTH	MARK	TYPE	A	B	C	D	E	F	G	H	J	K	O	R
98																	
99																	
100																	
101																	
102																	
103																	
104																	
105																	
106																	
107																	
108																	
109																	
110																	
111																	
112																	
113																	
114																	
115																	
116																	
117																	
118																	
119																	
120																	
121																	
122																	
123																	
124																	
125																	
126																	
127																	
128																	
129																	
130																	
131																	
132																	
133																	
134																	
135																	
136																	
137																	
138																	
139																	
140																	
141																	
142																	
143																	
144																	
145																	
146																	
147																	
148																	
149																	
150																	
151																	
152																	
153																	
154																	
155																	
156																	
157																	
158																	
159																	
160																	
161																	
162																	
163																	
164																	
165																	
166																	
167																	
168																	
169																	
170																	
171																	
172																	
173																	
174																	
175																	
176																	
177																	
178																	
179																	
180																	
181																	
182																	
183																	
184																	
185																	
186																	
187																	
188																	
189																	
190																	
191																	
192																	
193																	
194																	

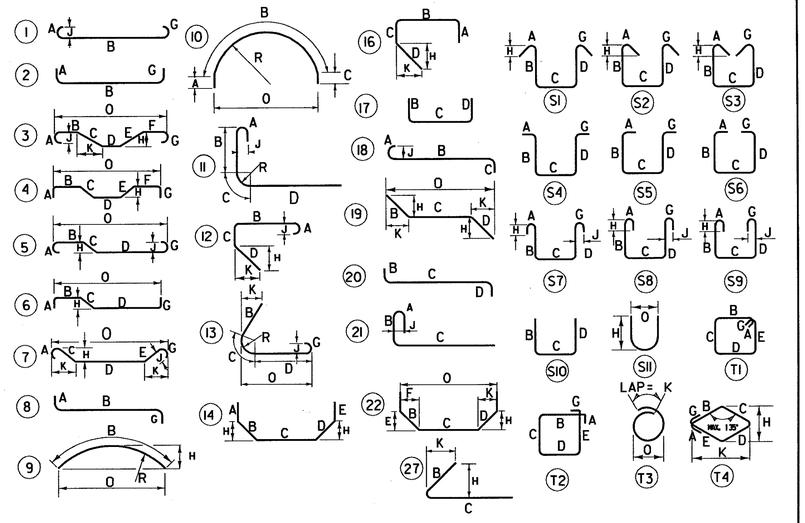

NOTES:

1. UNLESS OTHERWISE DESIGNATED, ALL BAR REINFORCEMENT FOR CONCRETE IN SIZES UP TO AND INCLUDING NO. 18 SHALL CONFORM TO THE REQUIREMENTS OF THE "SPECIFICATIONS FOR DEFORMED BILLET-STEEL BARS FOR CONCRETE REINFORCEMENT", AASHTO M 31 (ASTM A 615-S1). ALL BARS SHALL BE GRADE 60, UNLESS OTHERWISE DESIGNATED.
2. FOR TYPICAL BENDING DETAILS, RECOMMENDED PIN DIAMETER "D" OF BENDS AND HOOKS, AND OTHER STANDARD PRACTICE, SEE CURRENT CONCRETE REINFORCING STEEL INSTITUTE "MANUAL OF STANDARD PRACTICE".
3. BARS WHICH REQUIRE MORE ACCURATE BENDING THAN STANDARD PRACTICES SHOULD HAVE LIMITS INDICATED.
4. ALL DIMENSIONS ARE OUT TO OUT OF BAR EXCEPT "A" AND "G" ON STANDARD 180 DEGREE AND 135 DEGREE HOOKS.
5. "J" DIMENSION ON 180 DEGREE HOOKS TO BE SHOWN ONLY WHERE NECESSARY TO RESTRICT HOOK SIZE. OTHERWISE, STANDARD HOOKS ARE TO BE USED.
6. "H" DIMENSION ON STIRRUPS TO BE SHOWN ONLY WHEN NECESSARY TO MAINTAIN CLEARANCES.
7. WHERE SLOPE DIFFERS FROM 45 DEGREES, DIMENSIONS "H" AND "K" MUST BE SHOWN.
8. ▲ DENOTES BARS TO BE CUT IN FIELD.
9. ♦ DENOTES BARS TO BE BENT IN FIELD.
10. ✳ DENOTES ONE EXTRA BAR ADDED FOR TESTING PURPOSES.
11. △ DENOTES TWO EXTRA BARS ADDED FOR TESTING PURPOSES.
12. "E" IN PREFIX DENOTES EPOXY COATED REINFORCING STEEL.

ASTM STANDARD REINFORCING BARS

BAR SIZE DESIGNATION	WEIGHT POUNDS PER FOOT	NOMINAL DIMENSIONS ROUND SECTION		
		DIAMETER INCHES	CROSS SECTIONAL AREA SQ. INCHES	PERIMETER INCHES
#3	.376	.375	.11	1.178
#4	.668	.500	.20	1.571
#5	1.043	.625	.31	1.963
#6	1.502	.750	.44	2.356
#7	2.044	.875	.60	2.749
#8	2.670	1.000	.79	3.142
#9	3.400	1.128	1.00	3.544
#10	4.303	1.270	1.27	3.990
#11	5.313	1.410	1.56	4.430
#14	7.65	1.693	2.25	5.32
#18	13.60	2.257	4.00	7.09

FILE NAME =u\9755\MSTN\15\BR0025\25_bar-list.DGN
DATE/TIME =02/20/02
USER =2225

CHA CLOUGH, HARBOUR & ASSOCIATES LLP
ENGINEERS, SURVEYORS, PLANNERS & LANDSCAPE ARCHITECTS
11 WINNERS CIRCLE ALBANY, NEW YORK, 12205

STATE OF VERMONT
AGENCY OF TRANSPORTATION

Town Of SEARSBURG	Bridge No. 25
	Log Sta.
Highway No. VT. RTE. 9	Surv. Sta.
VT. RTE. 9 OVER DEERFIELD RIVER	
REINFORCING STEEL SCHEDULE 2 - BR 25	
Designed By D. VIENI	Drawn by K. DETRICK
Checked By M. OLSTAD Date 2/2002	Bridge Design Supervisor M. OLSTAD Date 2/2002
PROJECT SEARSBURG - WILMINGTON	PROJECT NO. NHF 010-1(18)
I.G.C. Info.	
Bridge Sheet No. BR241	Sheet 164 OF 435

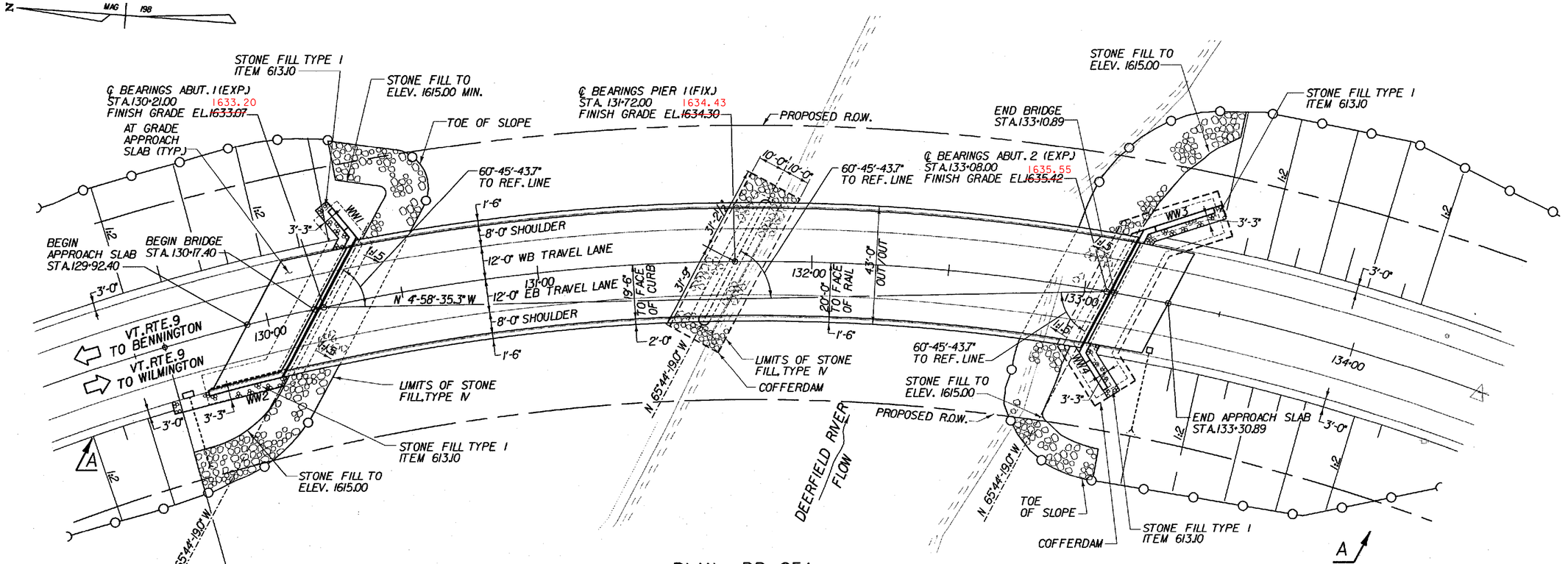

PLAN - BR 25A

SCALE 1" = 20'-0

20 0 20

CURVE DATA

REV P.C. = STA. 127+03.130
REV P.T. = STA. 134+48.830
Δ = 55°-55'-38.86" RT
R = 763.94'
Dc = 7°-30'
L = 745.70'
T = 405.58'
E = 100.99'
BANK: 0.0800 FT/FT

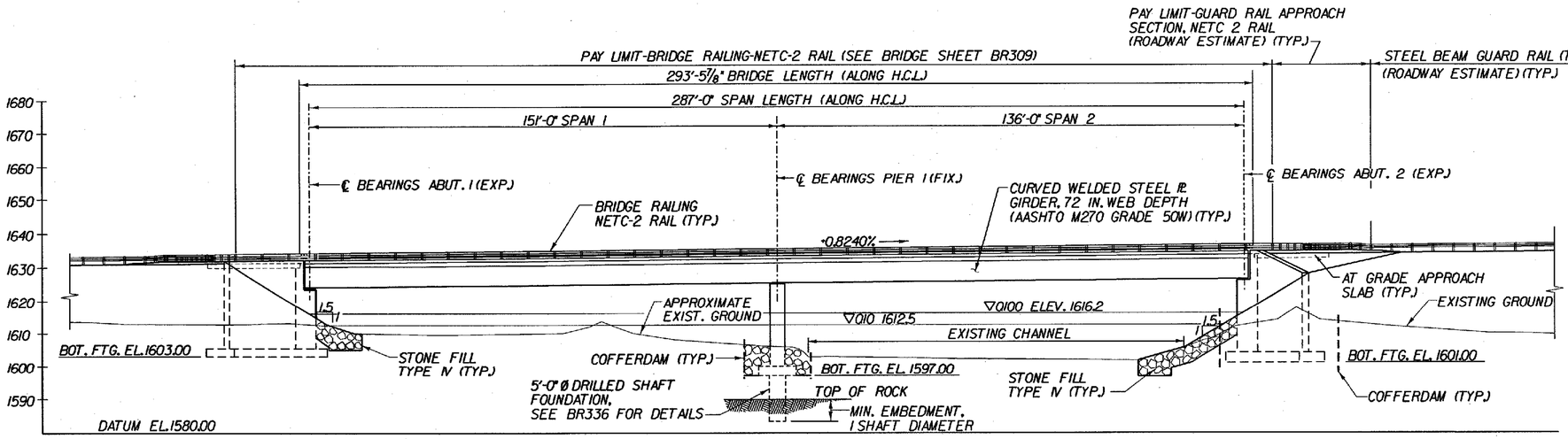

ELEVATION A-A - BR 25A

SCALE 1" = 20'-0

20 0 20

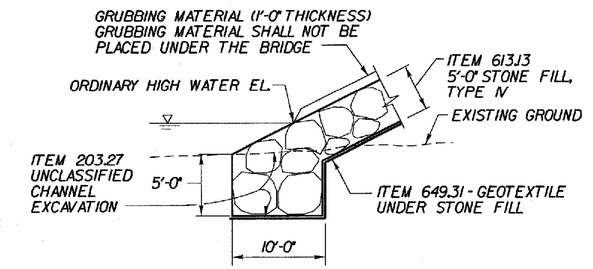

TYPICAL EMBANKMENT PROTECTION DETAIL

(NOT TO SCALE)

STATE OF VERMONT
AGENCY OF TRANSPORTATION

Town Of SEARSBURG		Bridge No. 25A
Highway No. VT. RTE. 9		Log Sta.
		Surv. Sta.

VT. RTE. 9 OVER DEERFIELD RIVER

PLAN AND ELEVATION - BR 25A

Designed By D. VIENI	Drawn by K. DETRICK / WmWEATHERBY
Checked By M. OLSTAD Date 2/2002	Bridge Design Supervisor M. OLSTAD Date 2/2002
PROJECT SEARSBURG - WILMINGTON	PROJECT NO. NHF 010-K(18)
I.G.C. Info.	
Bridge Sheet No. BR300	Sheet 165 OF 435

CHA CLOUGH, HARBOUR & ASSOCIATES LLP
ENGINEERS, SURVEYORS, PLANNERS & LANDSCAPE ARCHITECTS
3 WINNERS CIRCLE ALBANY, NEW YORK, 12205

DATE/TIME = 02/28/02
USER = 2225

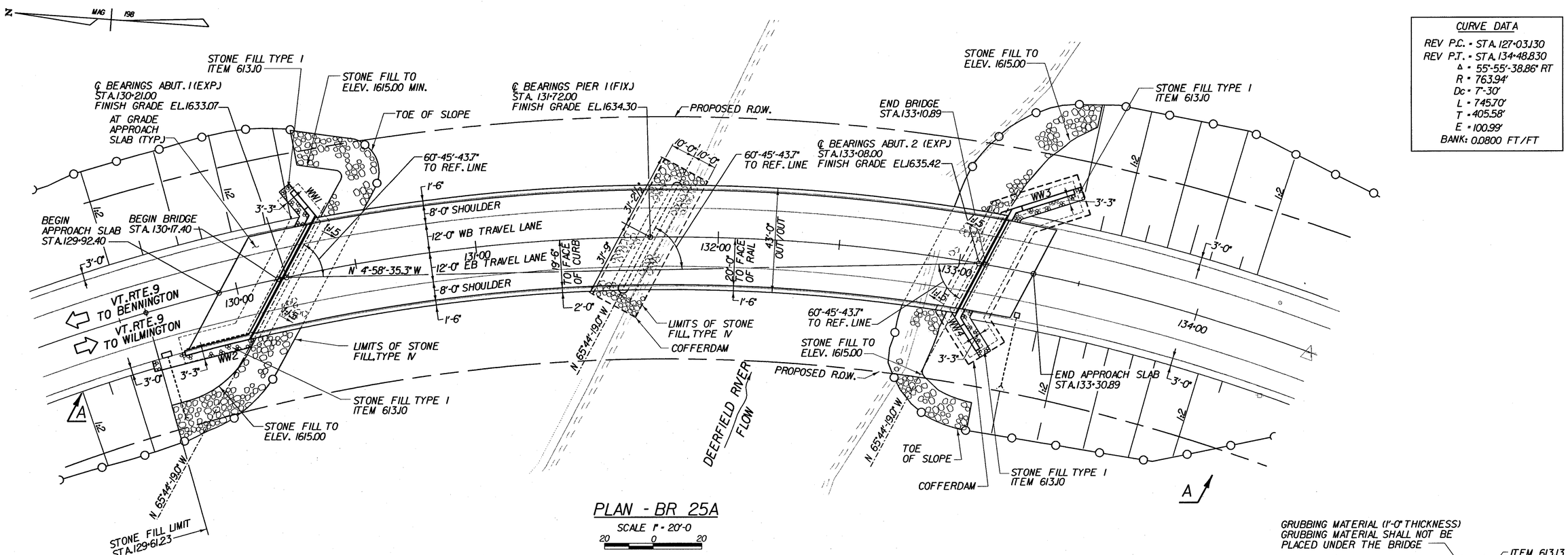

PLAN - BR 25A

SCALE 1" = 20'-0

20 0 20

CURVE DATA

REV P.C. = STA. 127+03.130
REV P.T. = STA. 134+48.830
Δ = 55°-55'-38.86" RT
R = 763.94'
Dc = 7°-30'
L = 745.70'
T = 405.58'
E = 100.99'
BANK: 0.0800 FT/FT

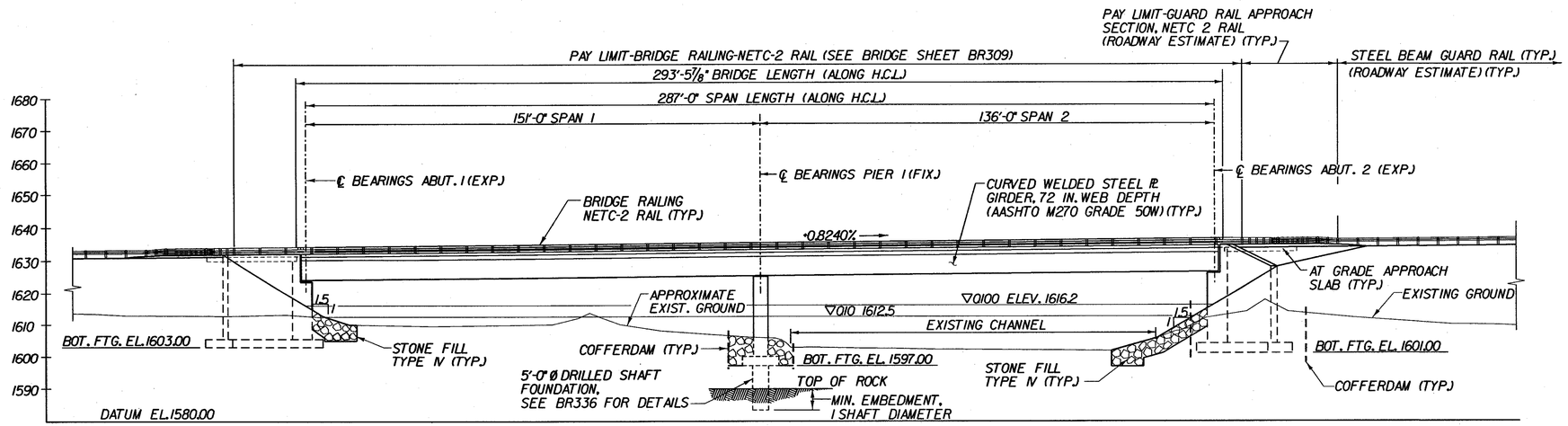

ELEVATION A-A - BR 25A

SCALE 1" = 20'-0

20 0 20

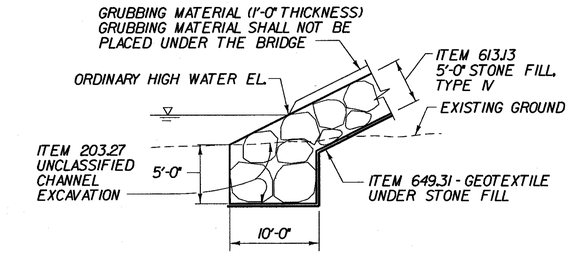

TYPICAL EMBANKMENT PROTECTION DETAIL

(NOT TO SCALE)

STATE OF VERMONT
AGENCY OF TRANSPORTATION

Town Of SEARSBURG	Bridge No. 25A
Highway No. VT. RTE. 9	Log Sta. / Surv. Sta.
VT. RTE. 9 OVER DEERFIELD RIVER	
PLAN AND ELEVATION - BR 25A	
Designed By D. VIENI	Drawn by K. DETRICK / WmWEATHERBY
Checked By M. OLSTAD Date 2/2002	Bridge Design Supervisor M. OLSTAD Date 2/2002
PROJECT SEARSBURG - WILMINGTON	PROJECT NO. NHF 010-1(18)
L.G.C. Info.	
Bridge Sheet No. BR300	Sheet 165 OF 435

CLOUGH, HARBOUR & ASSOCIATES LLP
ENGINEERS, SURVEYORS, PLANNERS & LANDSCAPE ARCHITECTS
3 WINNERS CIRCLE ALBANY, NEW YORK, 12205

FILE NAME = u:\9755\MSTN\15\BRDG25A\25A_PLN_ELE20.DGN
DATE/TIME = 02/28/02
USER = 22253

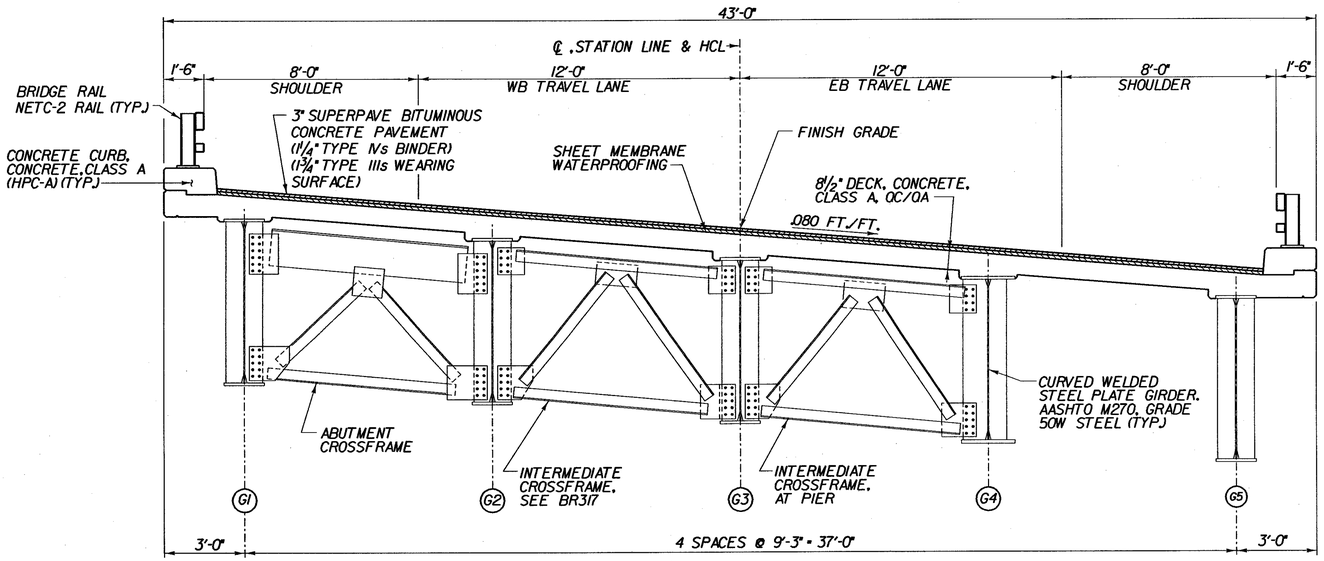

TYPICAL BRIDGE SECTION - BR 25A

(NOT TO SCALE)

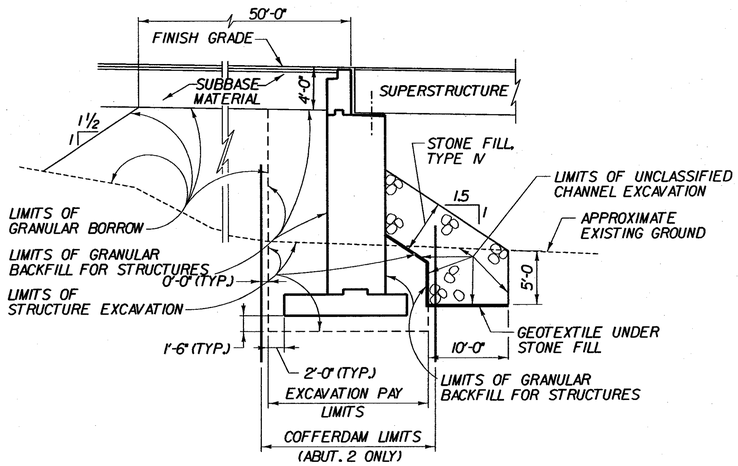

TYPICAL ABUTMENT SECTION - BR 25A

(NOT TO SCALE)

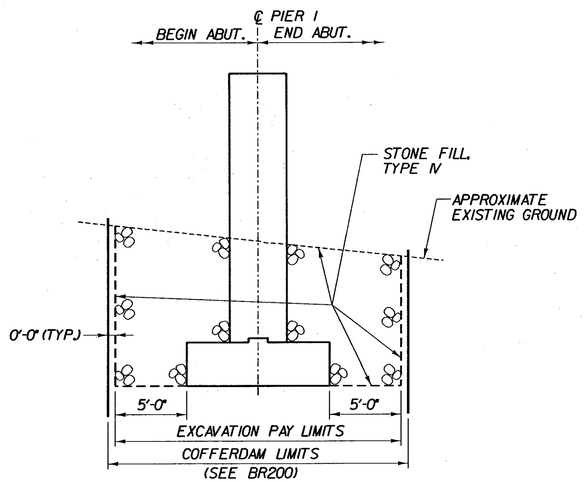

TYPICAL PIER SECTION - BR 25A

(NOT TO SCALE)

NOTE:

COFFERDAM SIZE TO BE DETERMINED BY THE CONTRACTOR.

THE PAY LIMITS OF COFFERDAM EXCAVATION, "ROCK" OR "EARTH" SHALL BE 5'-0" OUTSIDE THE FOOTING PERIMETER FOR PIER 1 AND 2'-0" OUTSIDE THE FOOTING PERIMTER FOR ABUTMENT 2.

IF A COFFERDAM IS CONSTRUCTED WHICH IS LARGER THAN THE COFFERDAM EXCAVATION PAY LIMITS, PAYMENT FOR ALL UNCLASSIFIED CHANNEL EXCAVATION, INCLUDING THAT PORTION WHICH IS INSIDE THE COFFERDAM BUT OUTSIDE THE COFFERDAM EXCAVATION PAY LIMITS, WILL BE MADE AT THE CONTRACT UNIT PRICE FOR UNCLASSIFIED CHANNEL EXCAVATION.

FILE NAME = u:\19755\MSTN\15\BRDG25A\25a_sec_abt.DGN
DATE/TIME = 02/28/02
USER = 2225

FINAL HYDRAULICS REPORT

HYDROLOGIC DATA

DRAINAGE AREA= 97.1 SQUARE MILES
CHARACTER OF TERRAIN: MOUNTAINOUS AND FORESTED
CHARACTER & TYPE OF STREAM: PERENNIAL, FLASHY, SUB TO SUPERCRITICAL AND SINUOUS
NATURE OF STREAMBED: GRAVEL, COBBLES TO LARGE BOULDERS

Q2.33= 2700 cfs
Q10= 6000 cfs
Q25= 8900 cfs
Q50= 11500 cfs
Q100= 13800 cfs
Q500= 22500 cfs

DATE OF FLOOD OF RECORD: SEPTEMBER 1938
WATER SURFACE ELEV.: UNKNOWN ESTIMATED DISCHARGE: UNKNOWN
NATURAL STREAM VELOCITY @ FLOOD OF RECORD @ Q50 = 11.1 fps
ICE CONDITIONS: MODERATE DEBRIS: MODERATE
DOES THE STREAM REACH MAXIMUM HIGHWATER ELEVATION RAPIDLY? YES
IS ORDINARY RISE RAPID? YES
IS STAGE AFFECTED BY UPSTREAM OR DOWNSTREAM CONDITIONS? YES
IF YES, DESCRIBE. SEARSBURG AND SOMERSET RESERVOIRS ARE UPSTREAM OF THIS SITE

WATERSHED STORAGE 4% HEADWATERS ___ UNIFORM THROUGHOUT WATERSHED X
IMMEDIATELY ABOVE SITE ___

EXISTING STRUCTURE

STRUCTURE TYPE: N/A - BRIDGE 25A IS A NEW STRUCTURE YEAR BUILT: ___
CLEAR SPAN (NORMAL TO STREAM): ___
VERTICAL CLEARANCE ABOVE STREAMBED: ___
WATERWAY OF FULL OPENING: ___
DISPOSITION OF STRUCTURE: ___
TYPE OF MATERIAL UNDER SUBSTRUCTURE: ___

WATER SURFACE ELEV. @ Q2.33= ___ VELOCITY= ___
Q10= ___ " = ___
Q25= ___ " = ___
Q50= ___ " = ___
Q100= ___ " = ___

LONG TERM STREAM BED CHANGES: ___

IS THE ROADWAY OVERTOPPED BELOW THE Q100? ___ FREQUENCY: ___
RELIEF ELEVATION: ___ DISCHARGE OVER ROAD @ Q100: ___

UPSTREAM STRUCTURE *1: TOWN: SEARSBURG DISTANCE: 0.3 mi
HIGHWAY NO.: VT ROUTE 9 STRUCTURE NO.: 25
STRUCTURE TYPE: THREE SPAN CONCRETE T-BEAM BRIDGE
CLEAR SPAN: 105 FT CLEAR HEIGHT: 20 FT
YEAR BUILT: 1934 FULL WATERWAY: 1700 SQ FT

UPSTREAM STRUCTURE *2: TOWN: ___ DISTANCE: ___
HIGHWAY NO.: ___ STRUCTURE NO.: ___
STRUCTURE TYPE: ___
CLEAR SPAN: ___ CLEAR HEIGHT: ___
YEAR BUILT: ___ FULL WATERWAY: ___

DOWNSTREAM STRUCTURE: TOWN: WILMINGTON DISTANCE: 1.5 mi
HIGHWAY NO.: TH-31 STRUCTURE NO.: 57
STRUCTURE TYPE: SINGLE SPAN PLTE GIRDER BRIDGE
CLEAR SPAN: 96 FT CLEAR HEIGHT: 13 FT
YEAR BUILT: 1985 FULL WATERWAY: 1200 SQ FT

PROPOSED STRUCTURE

STRUCTURE TYPE: TWO SPAN PLATE GIRDER BRIDGE
CLEAR SPAN(NORMAL TO STREAM): 242 FT
VERTICAL CLEARANCE ABOVE STREAMBED: 22 FT
WATERWAY OF FULL OPENING: 4300 FT

WATER SURFACE ELEV. @ Q2.33 =	1610.2 FT	VELOCITY	=	6.3 fps
" Q10 =	1612.5 FT	"	=	8.5 fps
" Q25 =	1614.1 FT	"	=	10.5 fps
" Q50 =	1615.2 FT	"	=	8.5 fps
" Q100 =	1616.2 FT	"	=	12.4 fps

IS THE ROADWAY OVERTOPPED BELOW THE Q100? NO FREQUENCY: ABOVE Q100
RELIEF ELEVATION: 1632.2 FT DISCHARGE OVER ROAD @ Q100: NONE

AVERAGE LOW ELEVATION OF SUPERSTRUCTURE: 1624.9
VERTICAL CLEARANCE @ Q50 = 9.7 FT (AVERAGE CLEARANCE)

SCOUR: Q50: 9 FT OF PIER SCOUR AND NO CONTRACTION SCOUR

REQUIRED CHANNEL PROTECTION: TYPE IV STONE FILL

PERMIT INFORMATION

AVERAGE DAILY FLOW: 200 CFS*
ORDINARY LOW WATER: 90 CFS* DEPTH: 1FT
ORDINARY HIGH WATER: 1200 CFS* DEPTH: 3 FT

ADDITIONAL COMMENTS

*OPERATION OF THE SEARSBURG RESERVOIR PENSTOCK MAY HAVE AN EFFECT ON THESE FLOW RATES.

CHA CLOUGH, HARBOUR & ASSOCIATES LLP
ENGINEERS, SURVEYORS, PLANNERS & LANDSCAPE ARCHITECTS
11 WINNERS CIRCLE ALBANY, NEW YORK, 12205

DESIGN CRITERIA:
1. DESIGN LIVE LOAD AASHTO HS-25
2. DESIGN SPAN 293'-5 7/8"
3. ALLOWABLE LOAD FOR SPREAD FOOTINGS ON SOIL 4 TSF ON LEDGE -
4. ALLOWABLE LOAD FOR PILING SEE DRILLED SHAFT NOTES BR3 TYPE SEE DRILLED SHAFT NOTES BR3 ESTIMATED LENGTH SEE DRILLED SHAFT NOTES BR3
5. STRUCTURAL STEEL AASHTO M270 GRADE 50 W UNPAINTED
6. REINFORCING STEEL AASHTO GRADE 60 M31 BILLET STEEL
7. CONCRETE CLASS A (QC/QA) - f'c=4000 PSI
CLASS B (HPC-B) - f'c=3500 PSI
CLASS A (HPC-A) - f'c=4000 PSI

TRAFFIC MAINTENANCE:
1. IS TRAFFIC TO BE MAINTAINED? N/A IF YES, ON EXISTING STRUCTURE - OR ON TEMPORARY BRIDGE -
2. TEMPORARY BRIDGE REQUIREMENTS: ONE OR TWO WAY - TRAFFIC CONTROL SIGNALS REQUIRED -
MINIMUM CLEAR SPAN (NORMAL TO STREAM): - VERTICAL CLEARANCE ABOVE STREAMBED: -
WATERWAY OF FULL OPENING: -
ARE SIDEWALKS REQUIRED? - IF SO, ON WHAT SIDE? -
STRUCTURE TYPE: -

LOAD FACTOR LOAD RATING (TONS)

LOADING LEVELS (LOAD FACTOR)	TRUCK H	HS	3S2	6 AXLE	3A.STR.	4A.STR.	5A.SEMI
INVENTORY A = 2.17; B = 1.00	32	58					
POSTED A = 1.55; B = 1.40	45	82	314		284	287	302
OPERATING A = 1.30; B = 1.67	54	97	374	391	338	342	

$RF = \frac{\emptyset M_N - 1.3\ M_{DL}}{A \times M_{LL+I}}$

$\frac{.95\ F_Y\ S_{LL+I} - M_{DL}\ \frac{S_{LL+I}}{S_{DL}} - M_{SDL}\ \frac{S_{LL+I}}{S_{SDL}}}{1.67\ M_{LL+I}}$

PROJECTED TRAFFIC DATA

YEAR	ADT	DHV	% D	% T	% ADTT
2000	-	-	-	-	-
2020	-	-	-	-	-

20 year ESAL for flexible pavement from 2000 to 2020: 4,825,000
40 year ESAL for flexible pavement from 2000 to 2040: 17,228,000
Design speed: 100 KM/H

STATE OF VERMONT
AGENCY OF TRANSPORTATION

Town Of SEARSBURG	Bridge No. 25A
	Log Sta.
Highway No. VT. RTE. 9	Surv. Sta.
VT. RTE. 9 OVER DEERFIELD RIVER	
PRELIMINARY INFORMATION - BR 25A	
Designed By D. VIENI	Drawn by K. DETRICK
Checked By M. OLSTAD Date 2/2002	Bridge Design Supervisor M. OLSTAD Date 2/2002
PROJECT SEARSBURG - WILMINGTON	PROJECT NO. NHF 010-1(8)
L.G.C. Info.	
Bridge Sheet No. BR301	Sheet 166 OF 435

BRIDGE QUANTITY SHEET

STATE OF VERMONT
AGENCY OF TRANSPORTATION
STRUCTURES DIVISION

	ITEM NO.	ITEM	UNIT	QUANTITY BREAKDOWN							TOTAL	FINAL
				SUPER-STRUCTURE	ABUTMENT 1	PIER 1	ABUTMENT 2	APPROACH SLABS	CHANNEL QUANTITIES	MISC.		
	203.27	UNCLASSIFIED CHANNEL EXCAVATION	CY		335						335	
Ⓡ	203.32	GRANULAR BORROW	CY		1,620		1,350				2,970	
	204.30	GRANULAR BACKFILL FOR STRUCTURES	CY		760		990				1,750	
	208.30	COFFERDAM EXCAVATION, EARTH	CY			200	230				430	
	208.35	COFFERDAM EXCAVATION, ROCK	CY			100	115				215	
	208.40	COFFERDAM @ BR25A, PIER ONE	LS			1					1	
	208.40	COFFERDAM @ BR25A, ABUTMENT TWO	LS				1				1	
Ⓡ	490.30	SUPERPAVE BITUMINOUS CONCRETE PAVEMENT (PG 58-28)	TON	199							199	
	501.221	CONCRETE, CLASS A, QC/QA	CY	325							325	
	501.22	CONCRETE, CLASS A (HPC-A)	CY	45	2						47	
	501.25	CONCRETE, CLASS B (HPC-B)	CY		460	260	580	110			1405	
	504.10	FURNISHING EQUIPMENT FOR DRIVING PILING (MOD.)	LS							1	1	
	505.25	CIP CONCRETE PILING (MOD - EARTH) (5' DIA)	LF			75					75	
	505.25	CIP CONCRETE PILING (MOD - ROCK) (5' DIA)	LF			15					15	
	505.40	PILE LOADING TEST (MOD)	EA			3					3	
	506.55	STRUCTURAL STEEL (PLATE GIRDER)	LB	614,122							614,122	
	507.15	REINFORCING STEEL	LB		47,255	55,985	54,130	420			157,790	
	507.17	EPOXY COATED REINFORCING STEEL	LB	123,300	165		120	11,215			134,480	
	508.15	SHEAR CONNECTORS (2946 - 7/8" DIA. x 7")	LS	1							1	
	513.25	STRUCTURAL PAINTING, SHOP APPLIED (16 TONS)	LS	1							1	
	513.40	SURFACE PREPARATION, SHOP	LS	1							1	
	514.10	WATER REPELLENT	GAL	15	15	20	18				68	
	516.10	BRIDGE EXPANSION JOINT (V1, TYPE)	LF		57		46				103	
	519.20	SHEET MEMBRANE WATERPROOFING (MOD.-TORCH APPLIED)	SY	1,585				80			1,665	
	525.33	BRIDGE RAILING - NETC 2 RAIL	LF	617							617	
	528.10	ONE-WAY TEMPORARY BRIDGE (MOD)	LS							1	1	
	531.10	BEARING DEVICE ASSEMBLY (EXPANSION @ ABUTMENT)	EA		5		5				10	
	531.10	BEARING DEVICE ASSEMBLY (FIXED @ PIER)	EA			5					5	
	613.10	STONE FILL, TYPE I	CY		7		6				13	
	613.13	STONE FILL, TYPE IV	CY		560	210	645				1,415	
	616.28	CAST-IN-PLACE CONCRETE CURB, TYPE B	LF		80		80				160	
	649.31	GEOTEXTILE UNDER STONE FILL	SY		360	120	385				865	
	651.40	GRUBBING MATERIAL	SY		95		95				190	

Ⓡ DESIGNATES ROADWAY ITEM

BRIDGE(S) AT STATION(S) 130+17.40 TO 133+10.89
LOCATION(S) VT. RTE. 9 OVER DEERFIELD RIVER

PREPARED BY: K. DETRICK
CHECKED BY: D. VIENI
SUPERVISOR: M.W. OLSTAD

PROJECT: SEARSBURG - WILMINGTON PROJECT NO: NHF 010-1(18)
BR BR302 OF
SHEET NO: 167 OF 435

dd096bq3.1

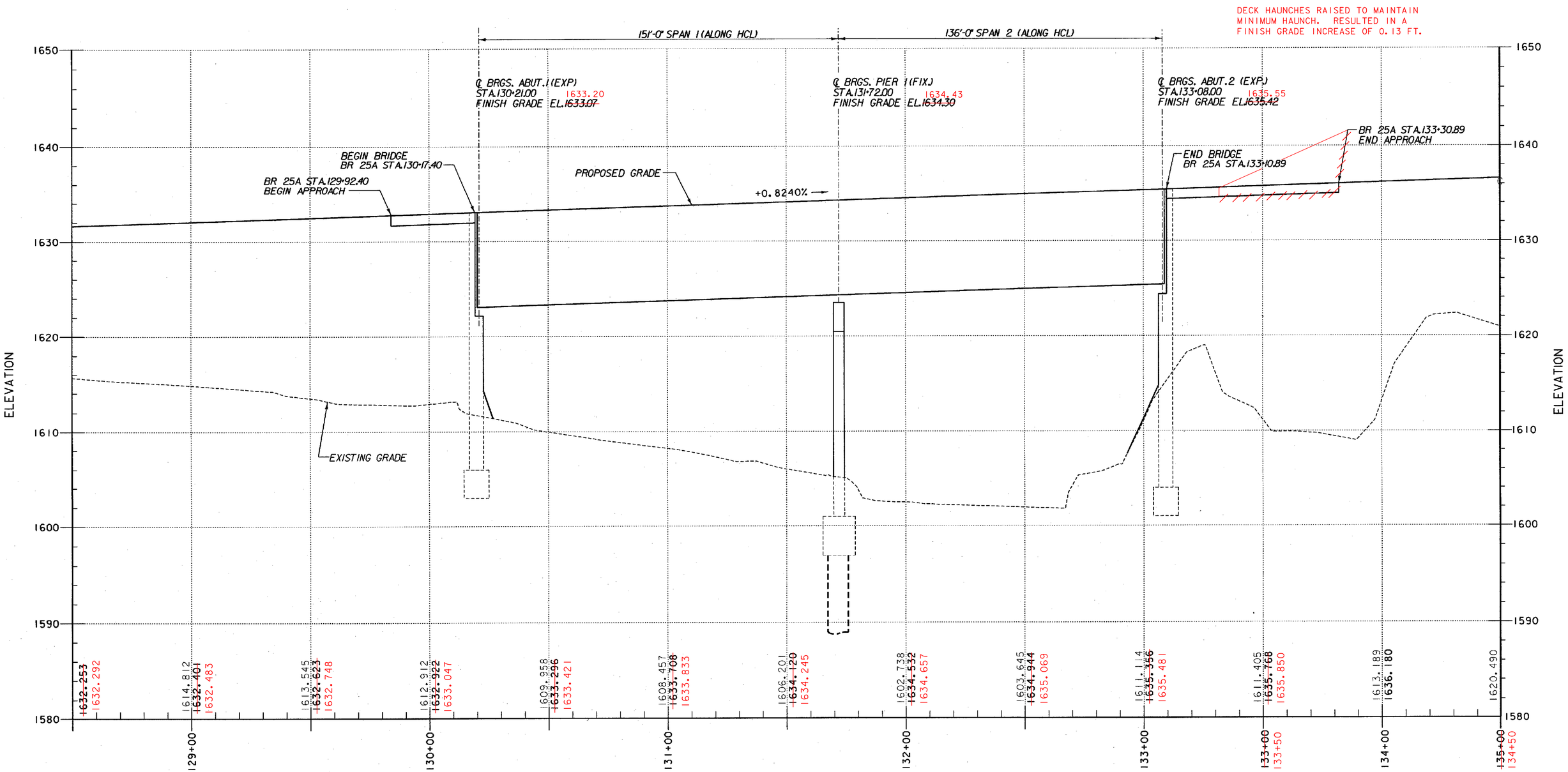

PROFILE - VT. RTE.9 OVER DEERFIELD RIVER - BR 25A

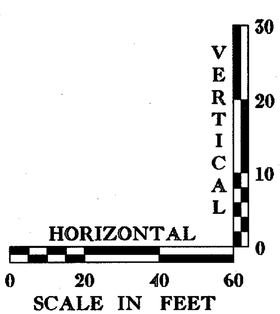

STATE OF VERMONT
AGENCY OF TRANSPORTATION

Town Of	SEARSBURG	Bridge No. 25A	
Highway No.	VT. RTE. 9	Log Sta.	
		Surv. Sta.	
VT. RTE. 9 OVER DEERFIELD RIVER			
PROFILE - BR 25A			
Designed By D. VIENI		Drawn by K. DETRICK	
Checked By M. OLSTAD	Date 2/2002	Bridge Design Supervisor M. OLSTAD	Date 2/2002
PROJECT SEARSBURG - WILMINGTON		PROJECT NO. NHF 010-K(18)	
I.G.C. Info.			
Bridge Sheet No. BR303		Sheet 168 OF 435	

CLOUGH, HARBOUR & ASSOCIATES LLP
ENGINEERS, SURVEYORS, PLANNERS & LANDSCAPE ARCHITECTS
10 WINNERS CIRCLE ALBANY, NEW YORK, 12205

FILE NAME =u:\9755\MSTN\15\BRDG25A\25a_prfile.DGN
DATE/TIME =02/20/02
USER =2225

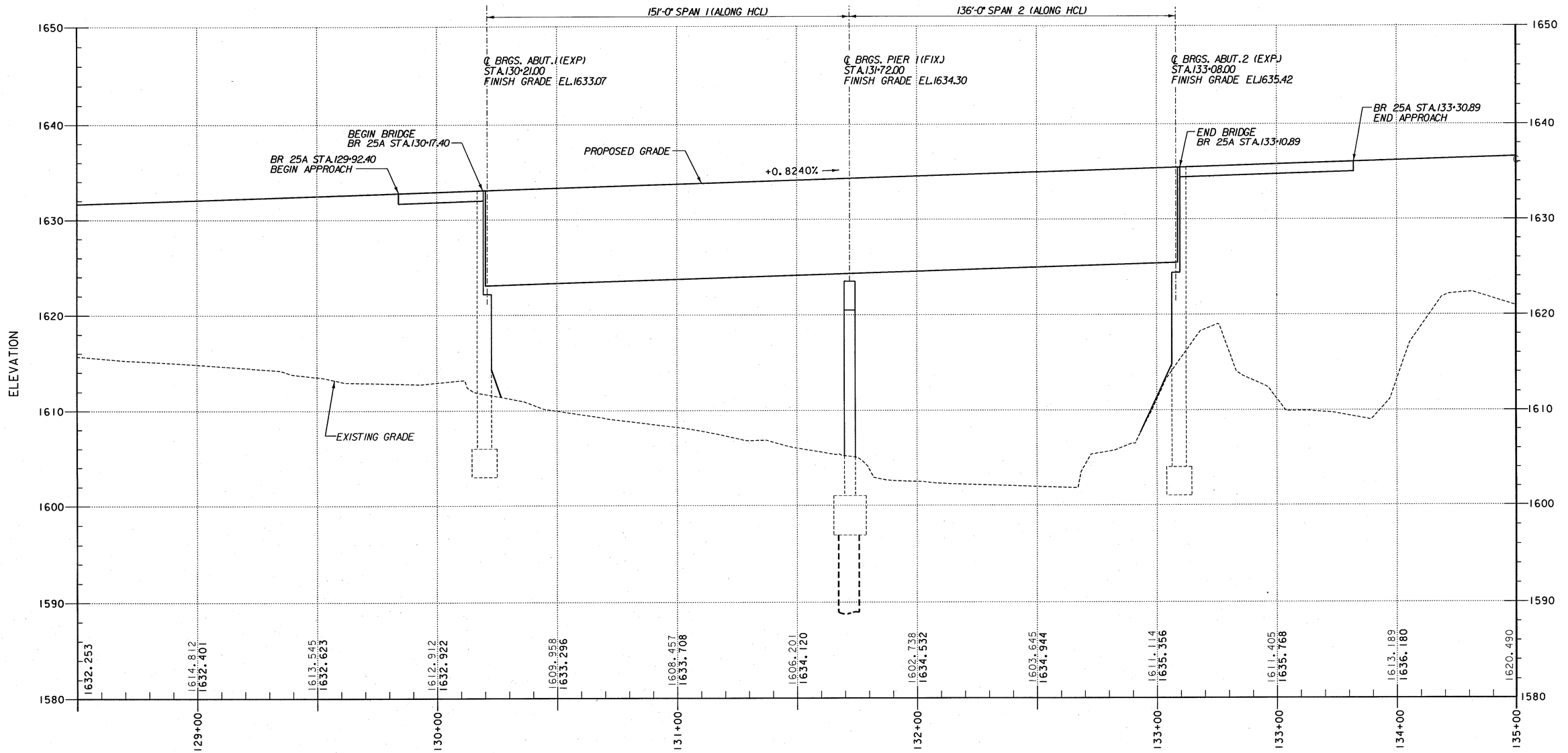

PROFILE - VT. RTE.9 OVER DEERFIELD RIVER - BR 25A

VERTICAL 0 10 20 30
HORIZONTAL 0 20 40 60
SCALE IN FEET

FILE NAME =u\9755\MSTN\S1\BRDG25A\25a_profile.DGN
DATE/TIME =02/28/02
USER =2225

STATE OF VERMONT
AGENCY OF TRANSPORTATION

Town Of SEARSBURG	Bridge No. 25A
Highway No. VT. RTE. 9	Log Sta. / Surv. Sta.
VT. RTE. 9 OVER DEERFIELD RIVER	
PROFILE - BR 25A	
Designed By D. VIENI	Drawn by K. DETRICK
Checked By M. OLSTAD Date 2/2002	Bridge Design Supervisor M. OLSTAD Date 2/2002
PROJECT SEARSBURG - WILMINGTON	PROJECT NO. NHF 010-1(18)
L.G.C. Info.	
Bridge Sheet No. BR303	Sheet 168 OF 435

CHA CLOUGH, HARBOUR & ASSOCIATES LLP
ENGINEERS, SURVEYORS, PLANNERS & LANDSCAPE ARCHITECTS
III WINNERS CIRCLE ALBANY, NEW YORK, 12205

SOIL CLASSIFICATION

AASHTO

A1	Gravel and Sand
A3	Fine Sand
A2	Silty or Clayey Gravel and Sand
A4	Silty Soil - Low Compressibility
A5	Silty Soil - Highly Compressible
A6	Clayey Soil - Low Compressibility
A7	Clayey Soil - Highly Compressible

ROCK QUALITY DESIGNATION

R.Q.D. (%)	ROCK DESCRIPTION
<25	Very Poor
25 to 50	Poor
51 to 75	Fair
76 to 90	Good
>90	Excellent

SHEAR STRENGTH

UNDRAINED SHEAR STRENGTH IN P.S.F.	CONSISTENCY
<250	Very Soft
250-500	Soft
500-1000	Med. Stiff
1000-2000	Stiff
2000-4000	Very Stiff
>4000	Hard

CORRELATION GUIDE OF "N" TO DENSITY/CONSISTENCY

DENSITY (GRANULAR SOILS) N	DESCRIPTIVE TERM	CONSISTENCY (COHESIVE SOILS) N	DESCRIPTIVE TERM
<5	Very Loose	<2	Very Soft
5-10	Loose	2-4	Soft
11-24	Med. Dense	5-8	Med. Stiff
25-50	Dense	9-15	Stiff
>50	Very Dense	16-30	Very Stiff
		31-60	Hard
		>60	Very Hard

COMMONLY USED SYMBOLS

▼	Water Elevation
⊕	Standard Penetration Boring
⊕	Auger Boring
⊙	Rod Sounding
S	Sample
N	Standard Penetration Test Blow Count Per Foot For: 2" O.D. Sampler 1 3/8" I.D. Sampler Hammer Weight Of 140 Lbs. Hammer Fall Of 30"
VS	Field Vane Shear Test
US	Undisturbed Soil Sample
B	Blast
DC	Diamond Core
MD	Mud Drill
WA	Wash Ahead
HSA	Hollow Stem Auger
AX	Core Size 1 1/8"
BX	Core Size 1 5/8"
NX	Core Size 2 1/8"
M	Double Tube Core Barrel Used
LL	Liquid Limit
PL	Plastic Limit
PI	Plasticity Index
NP	Non Plastic
w	Moisture Content (Dry Wgt. Basis)
D	Dry
M	Moist
MTW	Moist To Wet
W	Wet
Sat	Saturated
Bo	Boulder
Gr	Gravel
Sa	Sand
Si	Silt
Cl	Clay
HP	Hardpan
Le	Ledge
NLTD	No Ledge To Depth
CNPF	Can Not Penetrate Further
TLOB	To Ledge Or Boulder
NR	No Recovery
Rec.	Recovery
%Rec.	Percent Recovery
RQD	Rock Quality Designation
CBR	California Bearing Ratio
<	Less Than
>	Greater Than
R	Refusal (N > 100)

COLOR

blk	Black	pnk	Pink
bl	Blue	pu	Purple
brn	Brown	rd	Red
dk	Dark	tn	Tan
gry	Gray	wh	White
gn	Green	yel	Yellow
lt	Light	mltc	Multicolored
or	Orange		

DEFINITIONS (AASHTO)

BEDROCK (LEDGE) - Rock in its native location of indefinite thickness.

BOULDER - A rock fragment with an average dimension > 12 inches.

COBBLE - Rock fragments with an average dimension between 3 and 12 inches.

GRAVEL - Rounded particles of rock < 3" and > 0.0787" (#10 sieve).

SAND - Particles of rock < 0.0787" (#10 sieve) and > 0.0029" (#200 sieve).

SILT - Soil < 0.0029" (#200 sieve), non or slightly plastic and exhibits no strength when air-dried.

CLAY - Fine grained soil, exhibits plasticity when moist and considerable strength when air-dried.

VARVED - Alternate layers of silt and clay.

HARDPAN - Extremely dense soil, cemented layer, not softened when wet.

MUCK - Soft organic soil (containing > 10% organic material.

MOISTURE CONTENT - Weight of water divided by dry weight of soil.

FLOWING SAND - Granular soil so saturated (loose) that it flows into drill casing during extraction of wash rod.

STRIKE - Angle from magnetic north to line of intersection of bed with a horizontal plane.

DIP - Inclination of bed with a horizontal plane.

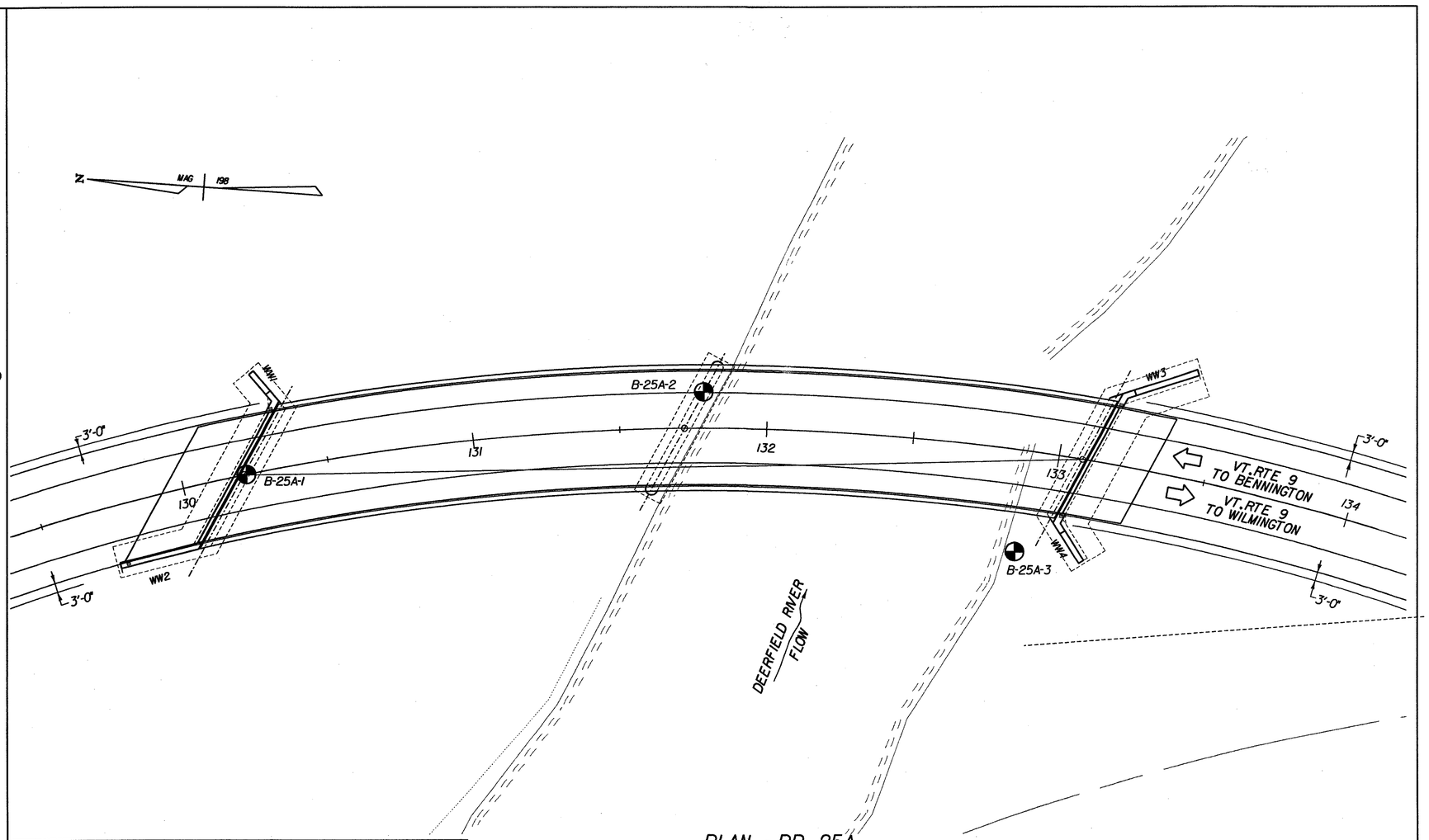

PLAN - BR 25A

SCALE 1" = 20'-0

20 0 20

LEGEND:

⊕ STANDARD PENETRATION BORING

TABLE OF BORING LOCATION

BORING NO.	STATION	OFFSET	GROUND ELEV.	ELEV. TLOB
B-25A-1	130+21.00	-	1611.50	NLTD
B-25A-2	131+78.55	12.24' LT.	1604.65	1572.15
B-25A-3	132+90.00	35.0' RT.	1608.50	1585.50

GENERAL NOTES

1. The subsurface explorations shown herein were made between 10/21/00 and 12/27/00 by New England Boring Contractors, Inc.
2. Soil and rock classifications, properties and descriptions are based on engineering interpretation from available subsurface information by the Agency and may not necessarily reflect actual variations in subsurface conditions that may be encountered between individual boring or sample locations.
3. Observed water levels and/or conditions indicated are as recorded at the time of exploration and may vary according to the prevailing rainfall, methods of exploration and other factors.
4. Engineering Judgement was exercised in preparing the subsurface information presented herein. Analysis and interpretation of subsurface data was performed and interpreted for Agency design and estimating purposes. Presentation of the information in the Contract is intended to provide the Contractor access to the same data available to the Agency. The subsurface information is presented in good faith and is not intended as a substitute for personal investigation, independent interpretation, independent analysis or judgement by the Contractor.
5. Pictorial structure details shown on the boring plan layout or soils profile are for illustrative purposes only and may not accurately portray final contract details.
6. Terminology used on boring logs to describe the hardness, degree of weathering, and spacing of fractures, joints and other discontinuities in the bedrock is defined in the AASHTO Manual on Subsurface Investigations, 1988.

CLOUGH, HARBOUR & ASSOCIATES LLP
ENGINEERS, SURVEYORS, PLANNERS & LANDSCAPE ARCHITECTS

STATE OF VERMONT
AGENCY OF TRANSPORTATION

Town Of SEARSBURG	Bridge No. 25A
Highway No. VT. RTE. 9	Log Sta.
	Surv. Sta.

VT. RTE. 9 OVER DEERFIELD RIVER

BORING INFORMATION SHEET - BR-25A

Designed By D. VIENI	Drawn by K. DETRICK
Checked By M. OLSTAD Date 12/2001	Bridge Design Supervisor M. OLSTAD Date 12/2001
PROJECT SEARSBURG - WILMINGTON	PROJECT NO. NHF 010-K18)
L.G.C. Info.	
Bridge Sheet No. BR304	Sheet 169 OF 435

FILE NAME =U:\1735\MSTN\15\BR00258A\25a_bor-epl.plt
DATE/TIME =12/13/2001
USER =664

ABUTMENT 1 BOTTOM OF FTG. EL. 1603.00

CLOUGH, HARBOUR & ASSOCIATES LLP
ENGINEERS, SURVEYORS, PLANNERS & LANDSCAPE ARCHITECTS

PROJECT NUMBER: 9755.07.01 12/29/00

VT. RTE. 9 OVER DEERFIELD RIVER
SUBSURFACE LOG
HOLE NUMBER B-25A-1

PAGE 1 OF 2

LOCATION: SEARSBURG, VT
DRILL FLUID: WATER @ 2 FT. DRILLING METHOD: 3" FJC
CLIENT: STATE OF VERMONT AGENCY OF TRANSPORTATION
CONTRACTOR: NEW ENGLAND BORING CONTRACTORS, INC.
DRILLER: T. CARPENTER INSPECTOR: J. COPPOLA
START DATE: 10-21-00 FINISH DATE: 10-21-00
SURFACE ELEV: 1611.50 (FT; ESTIMATED) LOGGED BY: MSO

WATER LEVEL OBSERVATIONS DURING DRILLING	DATE	TIME	WATER DEPTH (FT)	CASING BOTTOM (FT)	HOLE BOTTOM (FT)

SAMP./CORE NUMBER	SAMP./CORE ADV. (FT)	SAMP./CORE LGTH. (FT)	RECOVERY (FT)	BLOWS PER 6" ON SPLIT SPOON SAMPLER	% OR ROCK QUALITY	SAMPLE	DEPTH (FEET)	GRAPHICS	DESCRIPTION AND CLASSIFICATION	ELEVATION (FEET)	REMARKS ON CHARACTER OF DRILLING, WATER RETURN, ETC.	WATER LEVELS AND/OR WELL DATA
S-1	2			4-8-12-16	20				*UF. GRAVEL=U, SOME F.M.C. SAND, LITTLE SILT, BROWN, M. DENSE, MOIST (A-1-A)			
									*UCOBBLES AND BOULDERS=U	1610	CORED TO 5 FT., COBBLES AND BOULDERS TO END OF BORING	
R-1	5	4		NA			5			1605	CORED TO 10 FT.	
R-2	2	2		NA								
S-2	1	0.8		18-75-50/0	R		10		*UF.M.C. SAND=U, TRACE F.C. GRAVEL, TRACE SILT, BROWN, V. DENSE, MOIST (A-1-B)	1600	ROLLER BIT TO 12 FT.	
									*UCOBBLES AND BOULDERS=U		CORED TO 17 FT.	
R-3	5			NA			15			1595	ROLLER BIT TO 20 FT.	
											1 FT. DROP AT 18 FT.	
S-3	1.1	1		45-56-50/.1	R		20		*UF.C. GRAVEL=U, SOME F.M.C. SAND, LITTLE SILT, BROWN, M. DENSE, MOIST (A-1-A)	1590		
									*UCOBBLES AND BOULDERS=U	1585	CORED TO 31 FT.	
R-4	5	1.5		NA			25		*UCOBBLES AND BOULDERS=U (CONTINUED)			
S-4	0.9	0.9		15-100/.4	R		30		*UF. SAND=U, SOME SILT, TRACE F.C. GRAVEL, GRAY/BROWN, V. DENSE, MOIST (A-4)	1580	GRADATION PERFORMED ON SAMPLE S-4	
S-5	0.3	0		100/.3	R		35		INSUFFICIENT SAMPLE	1575	NO SAMPLE RECOVERY	
S-6	1.5	1.5		31-55-82	R		40		*UF. SAND=U, LITTLE SILT, GRAY/BROWN, V. DENSE, MOIST (A-4)	1570		
S-7	1.1	0.8		21-55-50/.1	R		45		*UF. SAND=U, SOME SILT, LITTLE M.C. SAND, TRACE CLAY, GRAY/GREEN, V. DENSE, MOIST (A-4)	1565	ROLLER BIT TO 50 FT.	
S-8	2	1.4		23-46-58-70	R		50		GRADES TO TRACE F.C. GRAVEL (A-4)	1560		
									END OF BORING AT 52 FT			
							55			1555		

PIER 1 BOTTOM OF FTG. EL. 1597.00

CLOUGH, HARBOUR & ASSOCIATES LLP
ENGINEERS, SURVEYORS, PLANNERS & LANDSCAPE ARCHITECTS

PROJECT NUMBER: 9755.07.01 12/29/00

VT. RTE. 9 OVER DEERFIELD RIVER
SUBSURFACE LOG
HOLE NUMBER B-25A-2

PAGE 1 OF 2

LOCATION: SEARSBURG, VT
DRILL FLUID: WATER @ 2 FT. DRILLING METHOD: 3" FJC
CLIENT: STATE OF VERMONT AGENCY OF TRANSPORTATION
CONTRACTOR: NEW ENGLAND BORING CONTRACTORS, INC.
DRILLER: T. CARPENTER INSPECTOR: J. COPPOLA
START DATE: 12-27-00 FINISH DATE: 12-27-00
SURFACE ELEV: 1604.65 (FT; ESTIMATED) LOGGED BY: MSO

WATER LEVEL OBSERVATIONS DURING DRILLING	DATE	TIME	WATER DEPTH (FT)	CASING BOTTOM (FT)	HOLE BOTTOM (FT)

SAMP./CORE NUMBER	SAMP./CORE ADV. (FT)	SAMP./CORE LGTH. (FT)	RECOVERY (FT)	BLOWS PER 6" ON SPLIT SPOON SAMPLER	% OR ROCK QUALITY	SAMPLE	DEPTH (FEET)	GRAPHICS	DESCRIPTION AND CLASSIFICATION	ELEVATION (FEET)	REMARKS ON CHARACTER OF DRILLING, WATER RETURN, ETC.	WATER LEVELS AND/OR WELL DATA
S-1	2	0.5		4-4-5-6	9				*UF.C. GRAVEL=U, SOME C. SAND, SOME ORGANICS, TRACE F.M. SAND, TRACE SILT, DK. BROWN, LOOSE, MOIST (A-1)		ROOTS IN SAMPLE	
									*UCOBBLES AND BOULDERS=U	1600	ADVANCED HOLE WITH ROLLER BIT	
R-1	5	1.7		NA			5				SPLIT SPOON REFUSAL @ 5 FT. BEGIN CORING, COBBLES AND BOULDERS TO END OF BORING	
										1595	WASH TURNS BROWN FROM 6-9FT, BOULDER AND SMALL COBBLES	
							10				BOULDER @ 10FT.	
S-2	1.5			25-36-110	R		15		*UF.C. GRAVEL=U, SOME C. SAND, LITTLE F.M. SAND, LITTLE SILT, BROWN, V. DENSE, WET (A-1-A)	1590	GRADATION PERFORMED ON SAMPLE S-2	
S-3	1.8	1		40-46-50/.8	R		20		*UF.M.C. SAND=U, SOME F.C. GRAVEL, LITTLE SILT, BROWN, V. DENSE, WET (A-2-4)	1585		
							25		*UF.M.C. SAND=U, SOME F.C. GRAVEL, LITTLE SILT, BROWN, V. DENSE, WET (A-2-4) (CONTINUED)	1580		
									*USCHIST=U, M. HARD, SLIGHTLY WEATHERED, M. FRACTURE SPACING, EXCELLENT ROD		POSSIBLE BEDROCK @31FT. ROLLER BIT TO 32.5FT.	
R-2	5	5		NA	100%		30			1575		
									SIMILAR BEDROCK	1570		
R-3	5	5		NA	100%		35			1565	EL. 1567 PROPOSED B.O.S. ELEVATION	
							40		END OF BORING AT 42.5 FT	1560		
							45			1555		
							50			1550		
							55					

ABUTMENT 2 BOTTOM OF FTG. EL. 1601.00

CLOUGH, HARBOUR & ASSOCIATES LLP
ENGINEERS, SURVEYORS, PLANNERS & LANDSCAPE ARCHITECTS

PROJECT NUMBER: 9755.07.01 12/29/00

VT. RTE. 9 Over Deerfield River
SUBSURFACE LOG
HOLE NUMBER B-25A-3

PAGE 1 OF 1

LOCATION: SEARSBURG, VT
DRILL FLUID: WATER @ 2 FT. DRILLING METHOD: 3" FJC
CLIENT: STATE OF VERMONT AGENCY OF TRANSPORTATION
CONTRACTOR: NEW ENGLAND BORING CONTRACTORS, INC.
DRILLER: T. CARPENTER INSPECTOR: J. COPPOLA
START DATE: 2-22-01 FINISH DATE: 2-23-01
SURFACE ELEV: 1608.50 (FT; ESTIMATED) LOGGED BY: MSO

WATER LEVEL OBSERVATIONS DURING DRILLING	DATE	TIME	WATER DEPTH (FT)	CASING BOTTOM (FT)	HOLE BOTTOM (FT)

SAMP./CORE NUMBER	SAMP./CORE ADV. (FT)	SAMP./CORE LGTH. (FT)	RECOVERY (FT)	BLOWS PER 6" ON SPLIT SPOON SAMPLER	% OR ROCK QUALITY	SAMPLE	DEPTH (FEET)	GRAPHICS	DESCRIPTION AND CLASSIFICATION	ELEVATION (FEET)	REMARKS ON CHARACTER OF DRILLING, WATER RETURN, ETC.	WATER LEVELS AND/OR WELL DATA
S-1	0.6	0.6		8-50/.1	R				F. SAND, LITTLE SILT, BROWN, LOOSE, MOIST (A-2-4)		SS REFUSAL ON POSSIBLE COBBLE ADVANCE CORE TO 5' POSSIBLE COBBLES AND BOULDERS	
C-1	4.4	3		NA					COBBLES AND BOULDERS	1605		
S-2	1.5	0.8		51-51-50	R		5		F.M.C. SAND, LITTLE SILT, LITTLE F.C. GRAVEL, BROWN, V. COMPACT, WET (A-2-4)			
C-2	3.5	1		NA					COBBLES AND BOULDERS	1600	ADVANCE CORE TO 10' POSSIBLE COBBLES AND BOULDERS	
S-3	2	1.5		10-21-25-31	46		10		F.M.C. SAND, TRACE SILT, TRACE F.C. GRAVEL, BROWN, COMPACT, WET (A-2-4)			
S-4	0.1	0		100/.1	R		15		INSUFFICIENT SAMPLE	1595	NO RECOVERY	
S-5	1.5	1.5		25-58-97	R		20		F. SAND, LITTLE SILT, BROWN, V. COMPACT, MOIST (A-2-4)	1590	ADVANCED WITH ROLLER BIT TO 23 FT.	
									SCHIST, GRAY, M. HARD, SLIGHTLY WEATHERED, M. FRACTURE SPACING, EXCELLENT ROD	1585	BEGAN CORING	
C-3	4.5	4.5		NA	90%		25					
									SCHIST, GRAY, M. HARD, SLIGHTLY WEATHERED, M. FRACTURE SPACING, EXCELLENT ROD	1580		
C-4	5.5	5.5		NA	95%		30			1575		
									END OF BORING AT 33 FT			
							35			1570		
							40			1565		
							45			1560		
							50			1555		
							55			1550		

STATE OF VERMONT
AGENCY OF TRANSPORTATION

Town Of	SEARSBURG	Bridge No.	25A
		Log Sta.	
Highway No.	VT. RTE. 9	Surv. Sta.	

VT. RTE. 9 OVER DEERFIELD RIVER

BORING LOGS - BR 25A

Designed By M. QUINN	Drawn by J. FORTE
Checked By M. QUINN Date 12/2001	Bridge Design Supervisor M. OLSTAD Date 12/2001
PROJECT SEARSBURG - WILMINGTON	PROJECT NO. NHF 010-1(18)
L.G.C. Info.	
Bridge Sheet No. BR305	Sheet 170 OF 435

CLOUGH, HARBOUR & ASSOCIATES LLP
ENGINEERS, SURVEYORS, PLANNERS & LANDSCAPE ARCHITECTS
3 WINNERS CIRCLE ALBANY, NEW YORK, 12205

FILE NAME =n:\9755\MSTN\15\BR0025A\25a_borelog.plt
DATE/TIME =12/17/01
USER =2225

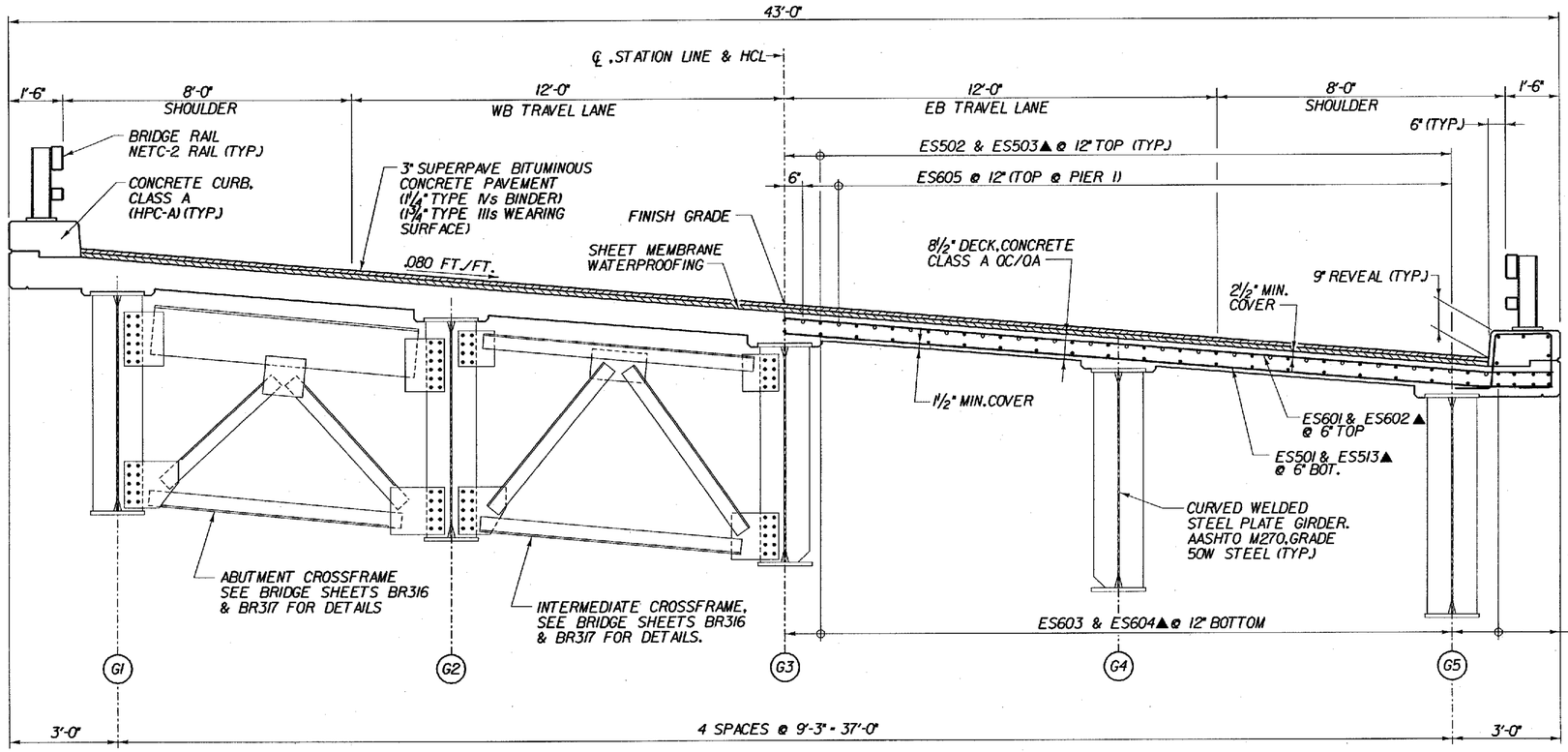

TRANSVERSE SECTION - BR25A

SCALE ½" = 1'-0

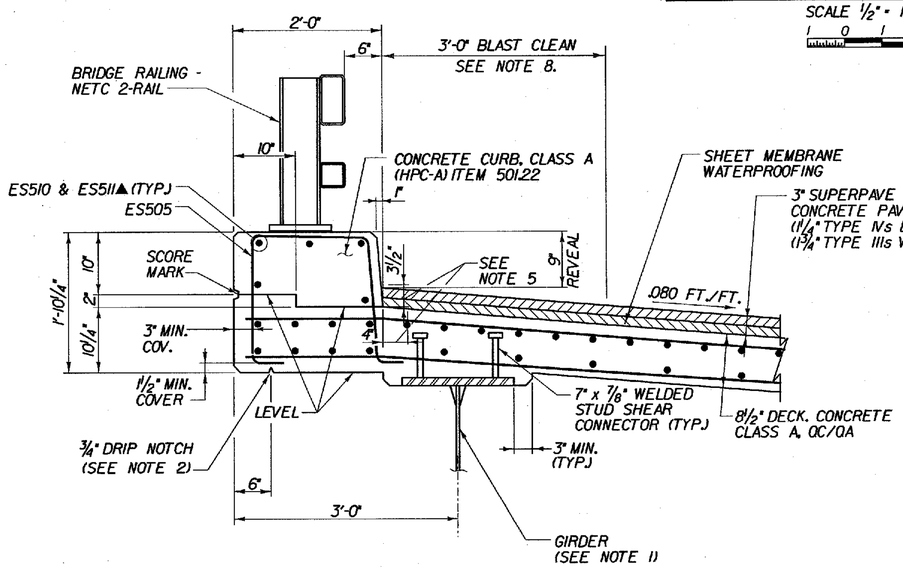

FASCIA DETAIL - BR 25A

SCALE 1" = 1'-0

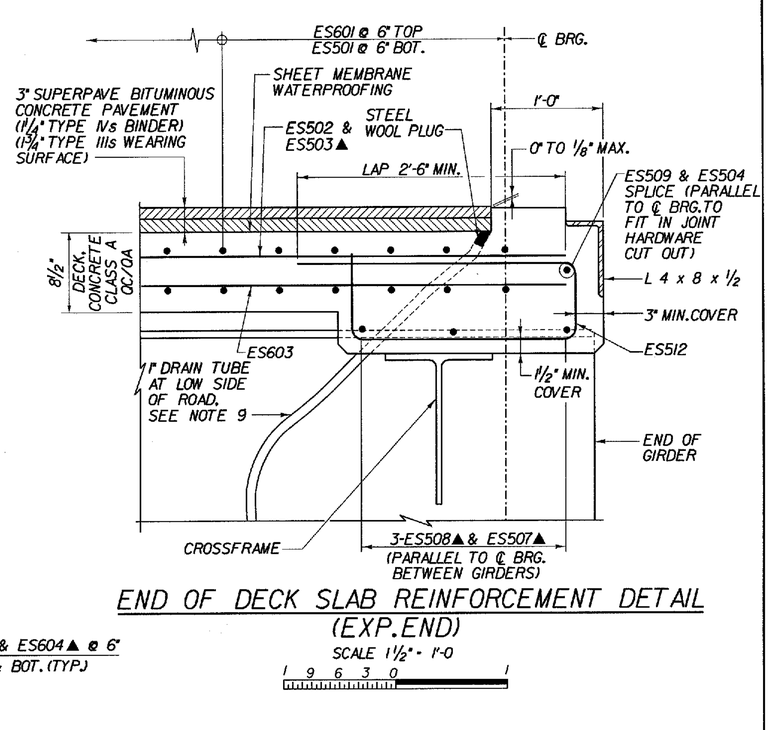

END OF DECK SLAB REINFORCEMENT DETAIL (EXP. END)

SCALE 1½" = 1'-0

1 9 6 3 0 1

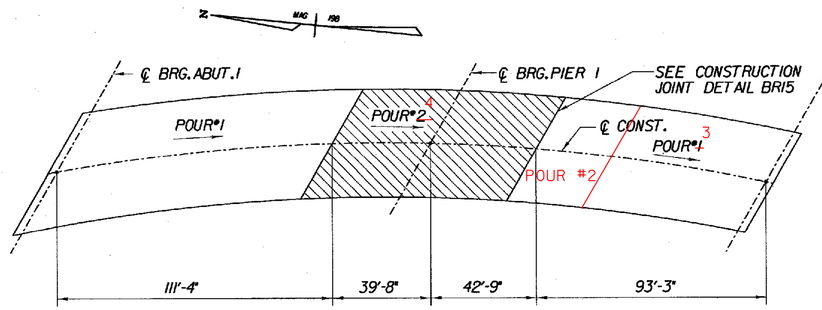

DECK POUR PLAN - BR25A

(NOT TO SCALE)

DECK SLAB PLACEMENT NOTES

A. EACH CONCRETE DECK POUR SHALL BE PLACED CONTINUOUSLY WITHIN ONE EIGHT HOUR WORKING DAY. THERE SHALL BE A MINIMUM DELAY PERIOD OF 96 HOURS AFTER COMPLETION OF EACH POUR BEFORE BEGINNING ANOTHER POUR. INDIVIDUAL POUR NUMBERS AS SHOWN MAY BE COMBINED INTO A SINGLE POUR IF APPROVED BY THE VAOT STRUCTURES ENGINEER.

B. THE DECK CONCRETE SHALL BE RETARDED SUFFICIENTLY TO REMAIN PLASTIC UNTIL EACH POUR IS COMPLETE. THE QUANTITY OF RETARDANT SHALL BE APPROVED BY THE CONCRETE ENGINEER PRIOR TO PLACEMENT. ANY DEVIATIONS FROM THIS PROCEDURE MUST BE APPROVED BY THE VAOT STRUCTURES ENGINEER IN WRITING BEFORE THE POUR BEGINS.

C. ——→ = DIRECTION OF POUR

NOTES:

1. FOR GIRDER SIZES SEE GIRDER ELEVATIONS BRIDGE SHEET BR312.
2. END DRIP NOTCH 3'-0" FROM FACE OF ABUTMENT AND OUTLET @ 45° TO FASCIA.
3. FOR DETAILS OF TRANSVERSE REINFORCEMENT, SEE DECK REINFORCEMENT PLANS, BRIDGE SHEETS BR308.
4. FOR DETAILS OF NETC BRIDGE RAIL AND APPROACH SECTION, SEE GUARD RAIL APPROACH SECTION, NETC 2 RAIL, BRIDGE SHEETS BR309, BR17, BR18 AND BR19.
5. DIMENSIONS SHOWN INDICATE AREA ALONG DECK AND UP FACE OF CURB FOR PLACEMENT OF 2 COATS OF POLYURETHANE MEMBRANE.
6. POLYURETHANE MEMBRANE AND BLAST CLEANING SHALL BE INCLUDED IN THE UNIT PRICE BID FOR SHEET MEMBRANE WATERPROOFING.
7. SHEET MEMBRANE WATERPROOFING SHALL EXTEND TO FACE OF CURB AS SHOWN IN DETAIL.
8. BLAST CLEAN 3'-0" FROM FACE OF CURB AND 3" UP CURB FACE PRIOR TO PLACING MEMBRANE.
9. THE COST OF 1" DIA. PLASTIC DRAIN TUBE IS SUBSIDIARY TO ITEM 501.221. CONCRETE, CLASS A, QA/QC. CARE SHALL BE TAKEN TO KEEP TUBE CLEAR DURING CONSTRUCTION. DRAIN TUBE SHALL CONFORM TO SUBSECTION 740.01.

STATE OF VERMONT
AGENCY OF TRANSPORTATION

Town Of	SEARSBURG	Bridge No. 25A	
Highway No.	VT. RTE. 9	Log Sta.	
		Surv. Sta.	

VT. RTE. 9 OVER DEERFIELD RIVER

TRANSVERSE SECTION - BR 25A

Designed By D. VIENI		Drawn by K. DETRICK	
Checked By M. OLSTAD	Date 2/2002	Bridge Design Supervisor M. OLSTAD	Date 2/2002
PROJECT SEARSBURG - WILMINGTON		PROJECT NO. NHF 010-1(18)	
LG.C. Info.			
Bridge Sheet No. BR307		Sheet 171 OF 435	

CLOUGH, HARBOUR & ASSOCIATES LLP
ENGINEERS, SURVEYORS, PLANNERS & LANDSCAPE ARCHITECTS
8 WINNERS CIRCLE ALBANY, NEW YORK, 12205

FILE NAME = u:\9755\MSTN\15\BRDG25A\25a_tsec1.DGN
DATE/TIME = 02/28/02
USER = 2225

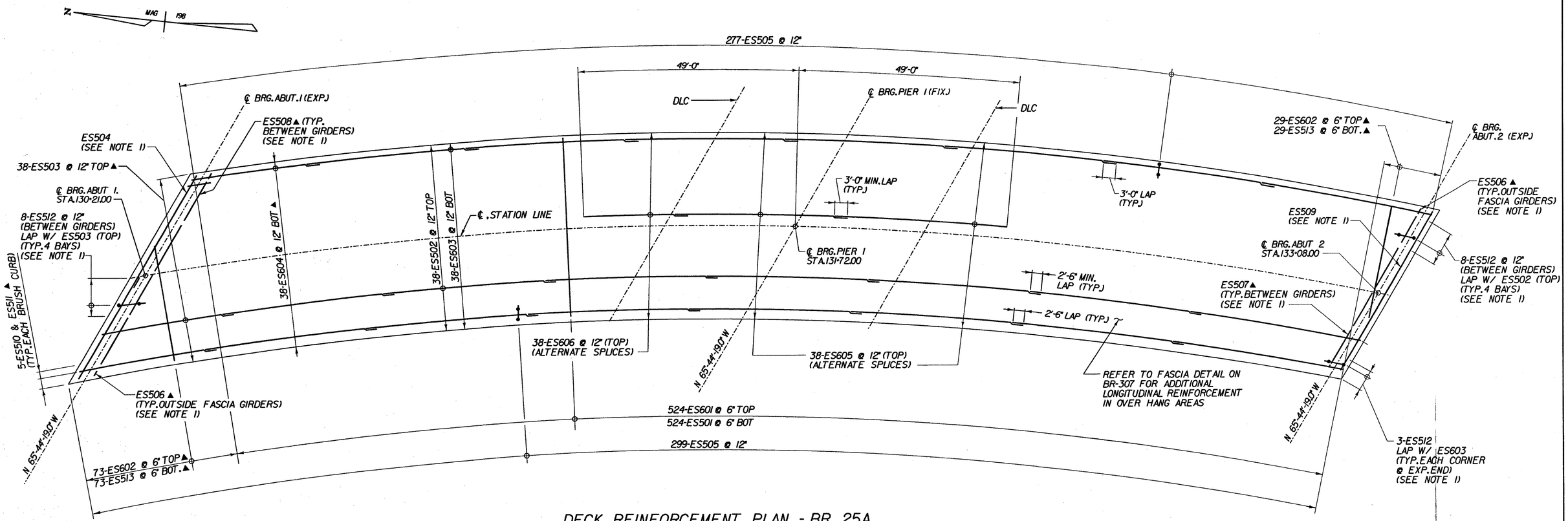

DECK REINFORCEMENT PLAN - BR 25A

SCALE 3/32" = 1'-0

1 0 4 8 12 16

NOTES:

1. FOR END OF DECK SLAB DETAILS, SEE TRANSVERSE SECTION (BR-25A) BRIDGE SHEET BR307
2. THE QUANITITY OF ES510 BARS SHOWN DOES NOT INCLUDE ADDITIONAL BARS REQUIRED BELOW THE BRIDGE RAIL POSTS. FOR DETAILS OF THE REQUIRED NETC 2-RAIL STANDARD, SEE SHEET BR17. FOR LOCATIONS OF THE BRIDGE RAIL POSTS, SEE CURB AND RAIL LAYOUT PLANS, BRIDGE SHEET BR309.

KEY:

NF = NEAR FACE
FF = FAR FACE
EF = EACH FACE
▲ = CUT TO FIT IN FIELD
3" CLR. UNLESS OTHERWISE SPECIFIED ON THE PLANS.

CLOUGH, HARBOUR & ASSOCIATES LLP
ENGINEERS, SURVEYORS, PLANNERS & LANDSCAPE ARCHITECTS
11 WINNERS CIRCLE ALBANY, NEW YORK, 12205

STATE OF VERMONT
AGENCY OF TRANSPORTATION

Town Of	SEARSBURG	Bridge No. 25A
		Log Sta.
Highway No.	VT. RTE. 9	Surv. Sta.
VT. RTE. 9 OVER DEERFIELD RIVER		
DECK REINFORCEMENT PLAN - BR 25A		
Designed By D. VIENI		Drawn by K. DETRICK
Checked By M. OLSTAD	Date 12/2001	Bridge Design Supervisor M. OLSTAD Date 12/2001
PROJECT SEARSBURG - WILMINGTON		PROJECT NO. NHF 010-1(18)
I.G.C. Info.		
Bridge Sheet No. BR308		Sheet 172 OF 435

FILE NAME =u:\9755\mstn\15\BRDG25A\25a_dck_refpln.plt
DATE/TIME =12/12/2001
USER =664

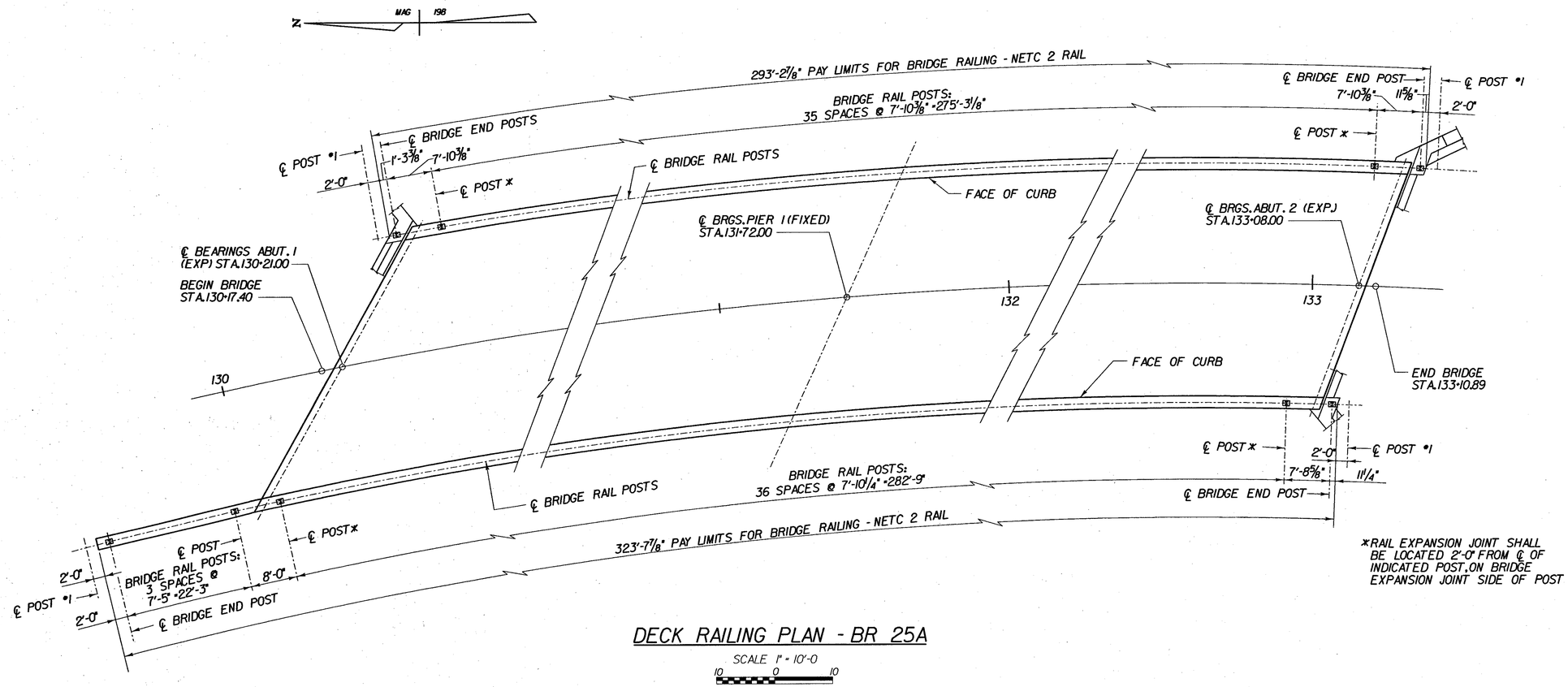

*RAIL EXPANSION JOINT SHALL BE LOCATED 2'-0" FROM ℄ OF INDICATED POST, ON BRIDGE EXPANSION JOINT SIDE OF POST

DECK RAILING PLAN - BR 25A

SCALE 1" = 10'-0

10 0 10

NOTES:

1. THE 2'-0" CURB SHALL BE PLACED IN 15'-0" MAX. SECTIONS AS PER SHEET BRI5, CURB JOINT DETAILS. PLACEMENT DETAILS FOR THE CURB SHALL BE SUBMITTED TO THE BRIDGE RAILING FABRICATOR BY THE CONTRACTOR
2. FOR NETC 2-RAIL BRIDGE RAILING DETAILS AND INFORMATION SEE STANDARD SHEETS BRI7 AND BRI8. AND GUARD RAIL APPROACH SECTION. NETC 2 RAIL, BRIDGE SHEETS BRI9.
3. BRIDGE RAIL POSTS SHALL BE 1'-10" MINIMUM FROM CURB CONSTRUCTION JOINTS. (UNLESS OTHERWISE NOTED.)
4. FOR BRIDGE RAILING DETAILS, SEE SHEET BRI7.
5. FOR APPROACH RAIL DETAILS, SEE SHEET BRI8.

STATE OF VERMONT
AGENCY OF TRANSPORTATION

Town Of SEARSBURG	Bridge No. 25A
Highway No. VT. RTE. 9	Log Sta. / Surv. Sta.
VT. RTE. 9 OVER DEERFIELD RIVER	
DECK RAILING PLAN - BR 25A	
Designed By D. VIENI	Drawn by K. DETRICK / WmWEATHERBY
Checked By M. OLSTAD Date 2/2002	Bridge Design Supervisor M. OLSTAD Date 2/2002
PROJECT SEARSBURG - WILMINGTON	PROJECT NO. NHF 010-K18)
I.G.C. Info.	
Bridge Sheet No. BR309	Sheet 173 OF 435

CHA CLOUGH, HARBOUR & ASSOCIATES LLP
ENGINEERS, SURVEYORS, PLANNERS & LANDSCAPE ARCHITECTS
3 WINNERS CIRCLE ALBANY, NEW YORK, 12205

FILE NAME =u:\9755\WSTN\15\BRDG25A\25a_dsk_rail.DGN
DATE/TIME =02/20/02
USER =2225

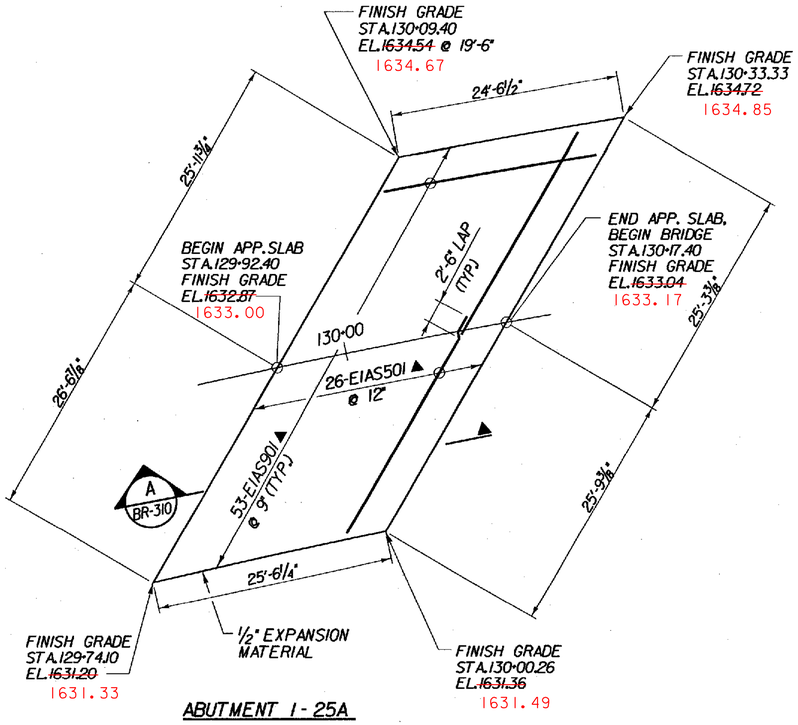

ABUTMENT 1 - 25A

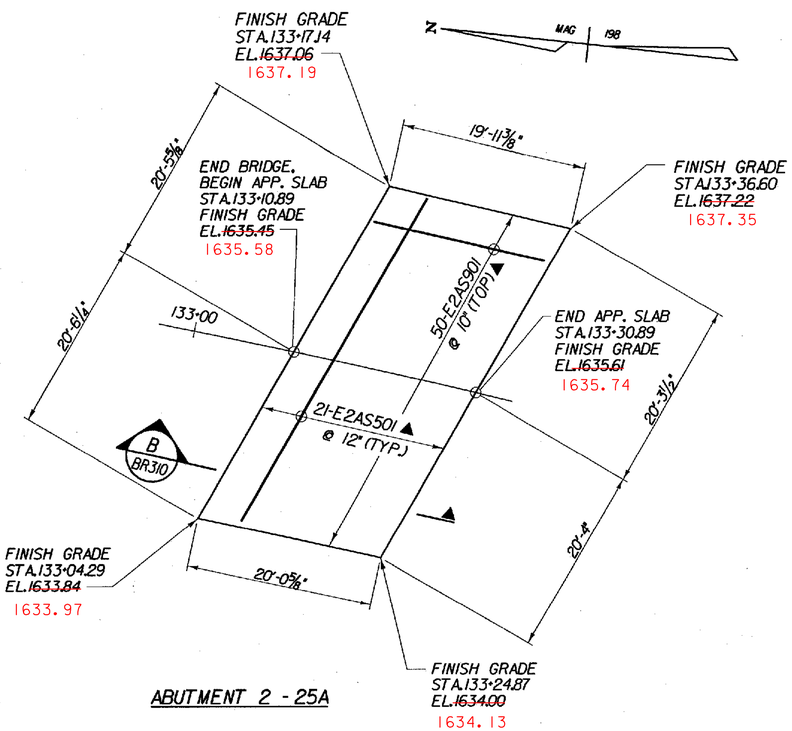

ABUTMENT 2 - 25A

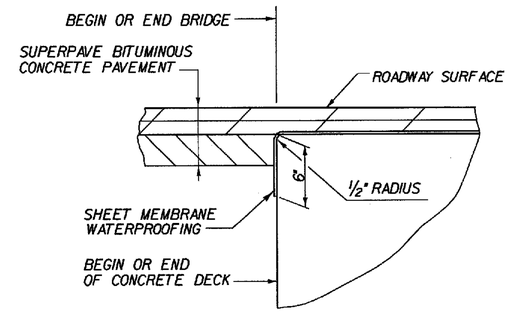

2 / BR310 — DETAIL FOR JOINT IN PAVEMENT AND SHEET MEMBRANE AT END OF BRIDGE

(NOT TO SCALE)

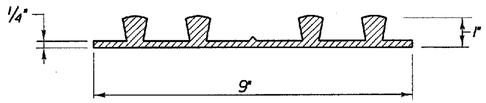

P.V.C. WATERSTOP FOR CONSTRUCTION JOINTS

(NOT TO SCALE)

APPROACH SLAB PLANS - BR 25A

SCALE 1/8" = 1'-0

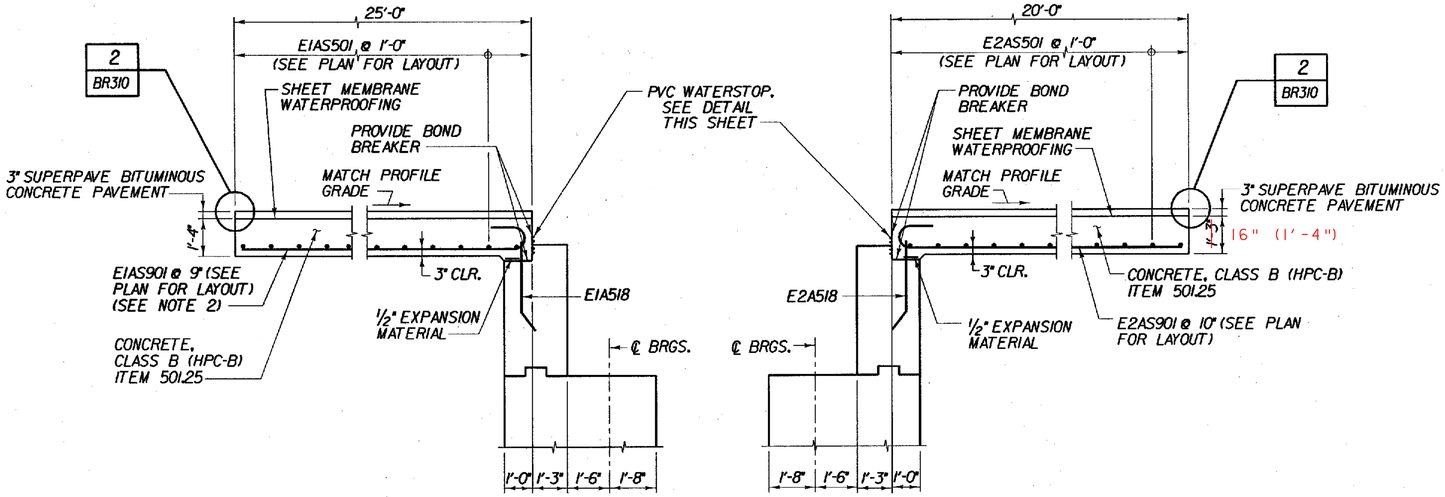

A / BR310 — APPROACH SLAB 1 SECTION

SCALE 3/8" = 1'-0

B / BR310 — APPROACH SLAB 2 SECTION

SCALE 3/8" = 1'-0

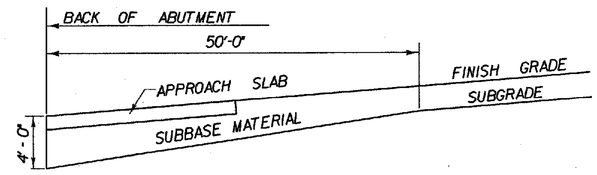

SUBBASE DETAIL AT ABUTMENTS

(ELEVATION IN CUT AND FILL)
(NOT TO SCALE)

KEY:

▲ DENOTES BARS TO BE CUT IN FIELD

NOTES:

1. THE COST FOR P.V.C. WATERSTOP SHALL BE INCLUDED IN THE UNIT PRICE BID FOR CONCRETE. OTHER CONFIGURATIONS MAY BE USED UPON APPROVAL OF THE STRUCTURES ENGINEER.
2. HOOK END OF BAR AS REQUIRED TO ACHIEVE MINIMUM COVER.

STATE OF VERMONT
AGENCY OF TRANSPORTATION

Town Of	SEARSBURG	Bridge No.	25A
		Log Sta.	
Highway No.	VT. RTE. 9	Surv. Sta.	

VT. RTE. 9 OVER DEERFIELD RIVER

APPROACH SLAB DETAILS - BR 25A

Designed By D. VIENI	Drawn by K. DETRICK/Wm WEATHERBY
Checked By M. OLSTAD Date 2/2002	Bridge Design Supervisor M. OLSTAD Date 2/2002
PROJECT SEARSBURG - WILMINGTON	PROJECT NO. NHF 010-1(18)
L.G.C. Info.	
Bridge Sheet No. BR310	Sheet 174 OF 435

CLOUGH, HARBOUR & ASSOCIATES LLP
ENGINEERS, SURVEYORS, PLANNERS & LANDSCAPE ARCHITECTS
3 WINNERS CIRCLE ALBANY, NEW YORK, 12205

FILE NAME = u:\9755\MSTN\15\BRDG25A\25a_apslab.DGN
DATE/TIME = 02/28/02
USER = 2223

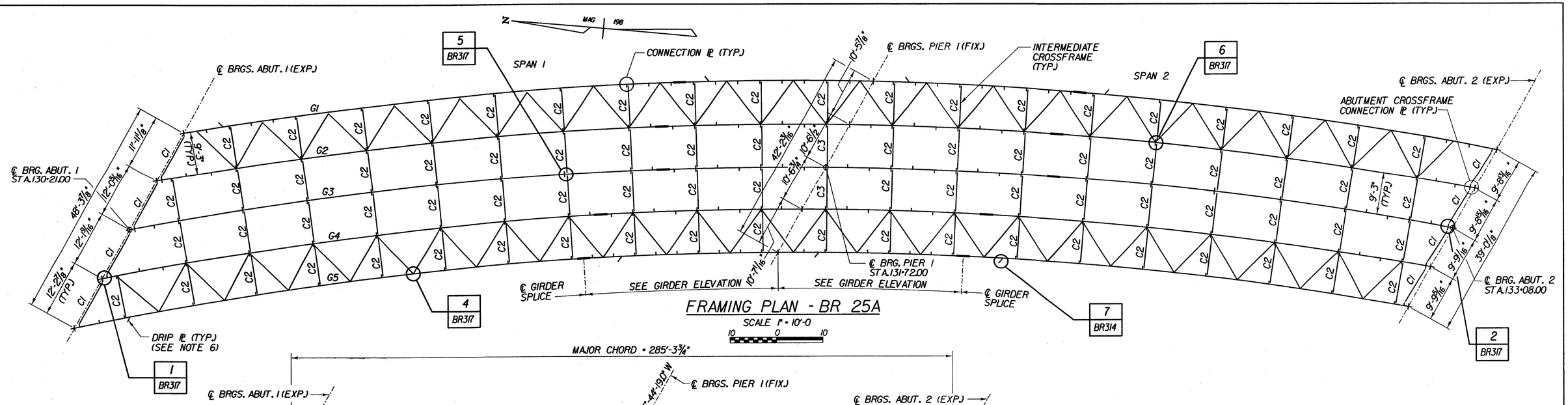

FRAMING PLAN - BR 25A

SCALE 1" = 10'-0"

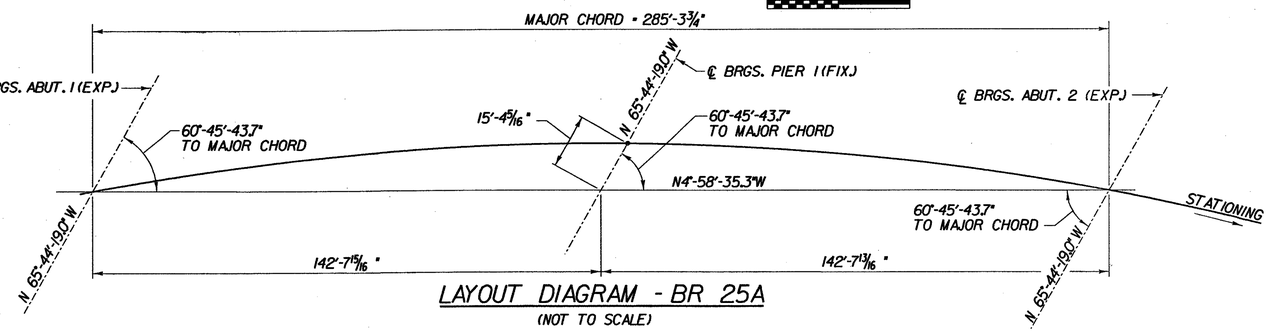

LAYOUT DIAGRAM - BR 25A

(NOT TO SCALE)

GRIDER NUMBER	GIRDER RADIUS	SIDE	SPAN 1 (ALONG ARC) BRG. STIFFENER/CONNECTION ℄ SPACING													TOTAL	SPAN 2 (ALONG ARC) BRG. STIFFENER/CONNECTION ℄ SPACING											TOTAL
G1	782.44	LEFT			9'-11³⁄₁₆"	14'-4⁷⁄₁₆"	14'-4⁷⁄₁₆"	14'-4⁷⁄₁₆"	14'-4⁷⁄₁₆"	14'-4⁷⁄₁₆"	14'-4⁷⁄₁₆"	14'-4⁷⁄₁₆"	14'-4⁷⁄₁₆"	14'-4⁷⁄₁₆"	10'-1"	149'-4¹⁄₁₆"		4'-3¾"	14'-4¾"	14'-4¾"	14'-4¾"	14'-4¾"	14'-4¾"	14'-4¾"	14'-4¾"	14'-4¾"	14'-4¾"	15'-11⁹⁄₁₆"	135'-4⁹⁄₁₆"
		RIGHT																										
G2	773.19	LEFT			17'-3⁹⁄₁₆"	14'-2⅝"	14'-2⅝"	14'-2⅝"	14'-2⅝"	14'-2⅝"	14'-2⅝"	14'-2⅝"	14'-2⅝"	14'-2⅝"	5'-0⅝"	150'-1³⁄₁₆"		9'-2¹⁄₁₆"	14'-2¹¹⁄₁₆"	14'-2¹¹⁄₁₆"	14'-2¹¹⁄₁₆"	14'-2¹¹⁄₁₆"	14'-2¹¹⁄₁₆"	14'-2¹¹⁄₁₆"	14'-2¹¹⁄₁₆"	14'-2¹¹⁄₁₆"	14'-2¹¹⁄₁₆"	12'-8¹¹⁄₁₆"	135'-8³⁄₁₆"
		RIGHT		3'-1³⁄₁₆"	14'-2⅝"	14'-2⅝"	14'-2⅝"	14'-2⅝"	14'-2⅝"	14'-2⅝"	14'-2⅝"	14'-2⅝"	14'-2⅝"	14'-2⅝"	5'-0⅝"		9'-2¹⁄₁₆"	14'-2¹¹⁄₁₆"	14'-2¹¹⁄₁₆"	14'-2¹¹⁄₁₆"	14'-2¹¹⁄₁₆"	14'-2¹¹⁄₁₆"	14'-2¹¹⁄₁₆"	14'-2¹¹⁄₁₆"	14'-2¹¹⁄₁₆"	14'-2¹¹⁄₁₆"	12'-8¹¹⁄₁₆"	
G3	763.94	LEFT			10'-8⅜"	14'-0⅜"	14'-0⅜"	14'-0⅜"	14'-0⅜"	14'-0⅜"	14'-0⅜"	14'-0⅜"	14'-0⅜"	14'-0⅜"		151'-0"		14'-0⅝"	14'-0⅝"	14'-0⅝"	14'-0⅝"	14'-0⅝"	14'-0⅝"	14'-0⅝"	14'-0⅝"	14'-0⅝"	9'-6¼"	136'-0"
		RIGHT			10'-8⅜"	14'-0⅜"	14'-0⅜"	14'-0⅜"	14'-0⅜"	14'-0⅜"	14'-0⅜"	14'-0⅜"	14'-0⅜"	14'-0⅜"				14'-0⅝"	14'-0⅝"	14'-0⅝"	14'-0⅝"	14'-0⅝"	14'-0⅝"	14'-0⅝"	14'-0⅝"	14'-0⅝"	9'-6¼"	
G4	754.69	LEFT			18'-4⅜"	13'-10⁵⁄₁₆"	13'-10⁵⁄₁₆"	13'-10⁵⁄₁₆"	13'-10⁵⁄₁₆"	13'-10⁵⁄₁₆"	13'-10⁵⁄₁₆"	13'-10⁵⁄₁₆"	13'-10⁵⁄₁₆"	13'-10⁵⁄₁₆"	8'-9½"	151'-10³⁄₁₆"	5'-0³⁄₁₆"	13'-10⅝"	13'-10⅝"	13'-10⅝"	13'-10⅝"	13'-10⅝"	13'-10⅝"	13'-10⅝"	13'-10⅝"	13'-10⅝"	6'-3¾"	136'-3¹⁵⁄₁₆"
		RIGHT	3'-1³⁄₁₆"	15'-3⅜"	13'-10⁵⁄₁₆"	13'-10⁵⁄₁₆"	13'-10⁵⁄₁₆"	13'-10⁵⁄₁₆"	13'-10⁵⁄₁₆"	13'-10⁵⁄₁₆"	13'-10⁵⁄₁₆"	13'-10⁵⁄₁₆"	13'-10⁵⁄₁₆"	13'-10⁵⁄₁₆"	8'-9½"		5'-0³⁄₁₆"	13'-10⅝"	13'-10⅝"	13'-10⅝"	13'-10⅝"	13'-10⅝"	13'-10⅝"	13'-10⅝"	13'-10⅝"	13'-10⅝"	6'-3¾"	
G5	745.44	LEFT	11'-0⁵⁄₁₆"	15'-0⁹⁄₁₆"	13'-8¼"	13'-8¼"	13'-8¼"	13'-8¼"	13'-8¼"	13'-8¼"	13'-8¼"	13'-8¼"	13'-8¼"	13'-8¼"	3'-6⁷⁄₁₆"	152'-10³⁄₁₆"	10'-1⅞"	13'-8⁹⁄₁₆"	13'-8⁹⁄₁₆"	13'-8⅝"	13'-8⅝"	13'-8⅝"	13'-8⅝"	13'-8⅝"	13'-8⅝"	13'-8⅝"	13'-8⅝"	3'-1³⁄₁₆"	136'-8¹⁄₁₆"
		RIGHT																										

CROSSFRAME LAYOUT TABLE - BR 25A

GRIDER NUMBER	SIDE	SPAN 1 (ALONG ARC) INTERMEDIATE STIFFENER ℄ SPACING FROM ℄ OF BEARING ABUT. 1											SPAN 2 (ALONG ARC) INTERMEDIATE STIFFENER ℄ SPACING FROM ℄ OF BEARING PIER 1									
G1	LEFT	4'-11⅝"	14'-8¾"	19'-6¼"	100'-11¹⁄₄"	105'-8¾"	115'-3¾"	120'-1¼"	129'-8⅛"	134'-5⅝"	144'-3⅝"		9'-1⅜"	13'-10⅞"	23'-6"	37'-10¾"	42'-8⅜"	124'-5"	129'-4⅞"			
	RIGHT																					
G2	LEFT	6'-6"		107'-2⅞"		121'-5¼"		135'-7⅝"					4'-7"	13'-11"		28'-1½"		127'-2⅜"				
	RIGHT		11'-10⅞"		111'-11¾"		126'-2"		140'-4½"						18'-8"		32'-10½"		131'-5¼"			
G3	LEFT		113'-7"		127'-7½"		141'-7⅞"						4'-8⅛"		18'-9"		32'-9½"		117'-1¼"		131'-2⅞"	
	RIGHT	5'-4¼"		118'-3⅛"		132'-3⅝"		146'-4"						9'-4⅜"		23'-5⅛"		37'-5⅝"		121'-9½"		
G4	LEFT	9'-0¼"		106'-1⅝"		120'-0⅛"		133'-10½"		147'-6"			9'-8⅜"		23'-7"		120'-9¼"					
	RIGHT		14'-1⅜"		110'-9⅛"		124'-7½"		138'-5⅞"					14'-3⅞"		28'-2½"		125'-4¾"				
G5	LEFT	5'-6"	112'-9¾"	117'-4½"	126'-6"	131'-0¾"	140'-2¼"	144'-9"					5'-6"	14'-8¾"	19'-3⅝"	28'-5¼"	33'-0⅛"					
	RIGHT																					

INTERMEDIATE STIFFENER LAYOUT TABLE - BR 25A

NOTES:

1. FOR WELDED PLATE GIRDER SEE BRIDGE SHEET BR312.
2. FOR FIELD SPLICE DETAILS, SEE TYPICAL GIRDER SPLICE DETAILS, BRIDGE SHEET BR315.
3. FOR CROSSFRAMES SEE TYPICAL CROSSFRAME DETAILS, BRIDGE SHEET BR316 AND BR317.
4. FOR CONNECTION PLATE DETAILS, SEE BRIDGE SHEET BR317.
5. GIRDER LAYOUT DIMENSIONS BEGIN AND END AT ABUTMENT CENTERLINES OF BEARING. LOCATIONS OF ABUTMENT CROSSFRAME CONNECTION PLATES NOT INCLUDED IN TABLE. THE CONTRACTOR SHALL PROVIDE THIS DIMENSION IN ACCORDANCE WITH DETAILS SHOWN IN TYPICAL PLATE GIRDER DETAILS. BRIDGE SHEETS BR312.
6. FOR DRIP PLATE DETAIL, SEE TYPICAL BRIDGE DETAILS, BRIDGE SHEET BR314.
7. INTERMEDIATE TRANSVERSE STIFFENERS LOCATIONS NOT SHOW IN TABLE, SEE FRAMING PLAN FOR LOCATION. SEE BR314 FOR SIZES
8. BEARING STIFFENER AND CONNECTION PLATE SPACING ± ⅛".

STATE OF VERMONT
AGENCY OF TRANSPORTATION

Town Of SEARSBURG	Bridge No. 25A
Highway No. VT. RTE. 9	Log Sta.
	Surv. Sta.

VT. RTE. 9 OVER DEERFIELD RIVER

FRAMING PLAN - BR 25A

Designed By D. VIENI	Drawn by J.L.AGONE/K. DETRICK
Checked By M. OLSTAD Date 12/2001	Bridge Design Supervisor M. OLSTAD Date 12/2001
PROJECT SEARSBURG - WILMINGTON	PROJECT NO. NHF 010-K(18)
L.G.C. Info.	
Bridge Sheet No. BR311	Sheet 175 OF 435

CHA CLOUGH, HARBOUR & ASSOCIATES LLP
ENGINEERS, SURVEYORS, PLANNERS & LANDSCAPE ARCHITECTS
11 WINNERS CIRCLE ALBANY, NEW YORK, 12205

FILE NAME =u:\9755\msrv\15\BR00256\25a_frmpln.plt
DATE/TIME =12/12/2001
USER =BB4

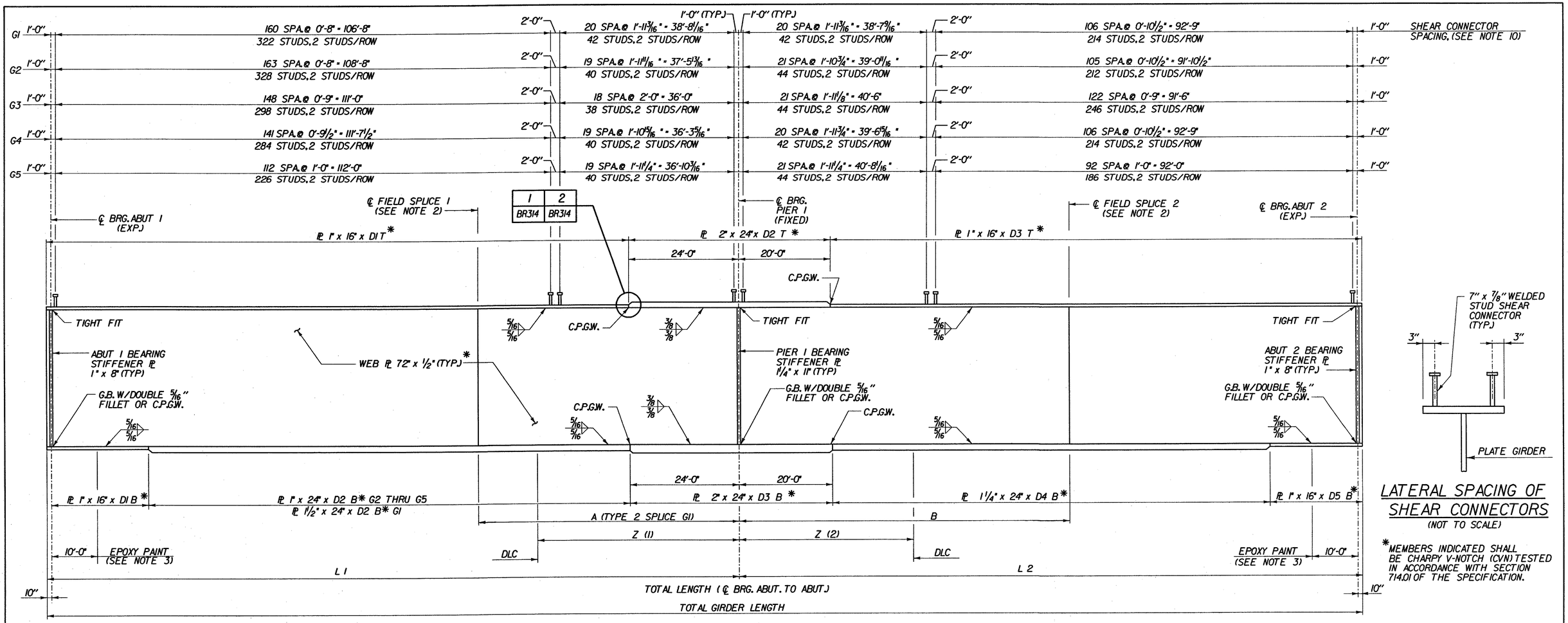

GIRDER ELEVATION - BR 25A

(NOT TO SCALE)

LATERAL SPACING OF SHEAR CONNECTORS

(NOT TO SCALE)

*MEMBERS INDICATED SHALL BE CHARPY V-NOTCH (CVN) TESTED IN ACCORDANCE WITH SECTION 714.01 OF THE SPECIFICATION.

BR 25A

GIRDER	RADIUS	SPAN LENGTHS (ALONG ARC) FT-IN L 1	SPAN LENGTHS (ALONG ARC) FT-IN L 2	TOTAL SPAN LENGTH	GIRDER	SPLICE 1 "A"	SPLICE 1 TYPE	SPLICE 2 "B"	SPLICE 2 TYPE	GIRDER	POINT OF DEAD LOAD CONTRAFLECTURE Z (1)	Z (2)
G1	782.44	150'-2 1/16"	136'-2 9/16"	286'-4 5/8"	G1	41'-10 1/16"	2	44'-7 7/8"	1	G1	43'-2"	43'-11"
G2	773.19	150'-11 3/16"	136'-6 3/16"	287'-6"	G2	40'-6 1/2"	1	44'-8 3/4"	1	G2	42'-1"	44'-11"
G3	763.94	151'-10"	136'-10"	288'-8"	G3	35'-1"	1	49'-2 1/4"	1	G3	41'-1"	45'-9"
G4	754.69	152'-8 13/16"	137'-1 5/16"	289'-10 3/4"	G4	43'-5 1/4"	1	39'-9 1/4"	1	G4	41'-4"	47'-7"
G5	745.44'	153'-8 3/16"	137'-6 1/16"	291'-2 1/4"	G5	41'-11 7/16"	1	40'-7 3/4"	1	G5	41'-11"	45'-10"

GIRDER	TOP FLANGE SECTION LENGTHS (ALONG ARC) D1 T	D2 T	D3 T	GIRDER	BOTTOM FLANGE SECTION LENGTHS (ALONG ARC) D1 B	D2 B	D3 B	D4 B	D5 B
G1	126'-2 1/16"	44'-0"	116'-2 9/16"	G1	22'-10"	103'-4 1/16"	44'-0"	95'-4 9/16"	20'-10"
G2	126'-11 3/16"	44'-0"	116'-6 3/16"	G2	22'-10"	104'-1 3/16"	44'-0"	95'-8 3/16"	20'-10"
G3	127'-10"	44'-0"	116'-10"	G3	22'-10"	105'-0"	44'-0"	96'-0"	20'-10"
G4	128'-8 13/16"	44'-0"	117'-1 5/16"	G4	22'-10"	105'-10 3/16"	44'-0"	96'-3 5/16"	20'-10"
G5	129'-8 3/16"	44'-0"	117'-6 1/16"	G5	22'-10"	106'-10 3/16"	44'-0"	96'-8 1/16"	20'-10"

NOTES:

1. ALL STRUCTURAL STEEL SHALL BE AASHTO M270 GR 50W UNLESS OTHERWISE NOTED.
2. FOR FIELD SPLICE DETAILS, SEE TYPICAL GIRDER SPLICE DETAILS, BRIDGE SHEET BR315 AND BR315A.
3. ALL STRUCTURAL STEEL WITHIN 10 FEET OF END OF GIRDER SHALL BE COATED WITH A PROTECTIVE PAINT SYSTEM, WITH THE FINAL COAT TO BE DARK BROWN (COLOR CHIP #20059) TO BLEND WITH THE WEATHERING STEEL. THE COST OF PAINTING SHALL BE PAID UNDER ITEM 513.25, "STRUCTURAL PAINTING SHOP APPLIED". IN ADDITION A GREASE COATING SHALL BE APPLIED TO PAINTED AREAS, THE COLOR SHALL MATCH THE COLOR OF THE FINAL PAINT COAT, AS PER SUPPLEMENTARY SPECIFICATION 513.06.
4. ALL BEARING STIFFENER PLATES SHALL BE VERTICAL IN THEIR FINAL ERECTED POSITION.
5. ENDS OF GIRDERS SHALL BE FABRICATED SO THAT THE ENDS WILL BE VERTICAL UNDER FULL DEAD LOAD.
6. IN AREAS OF UNPAINTED STEEL, CONTACT SURFACES OF BOLTED CONNECTIONS SHALL BE BLAST CLEANED IF RUSTED BEFORE CONNECTION IS MADE. IN AREAS OF PAINTED STEEL, PRIMER SHALL REMAIN ON THE SURFACES OF STEEL CONNECTION CONTACTS.
7. FOR CROSSFRAME DETAILS, SEE SHEET BR316 AND BR317.
8. TOP OF STUDS SHALL EXTEND ABOVE BOTTOM LAYER OF DECK REINFORCEMENT.
9. BUTT WELDED FLANGE PLATES SHALL BE OFFSET 5'-0" FROM BUTT WELDED WEB PLATES.
10. NUMBER OF STUDS SPECIFIED. ACTUAL SPACING VARIES ±1/4".
11. GIRDER SPLICES ARE TYPE 1 U.O.N.

CHA CLOUGH, HARBOUR & ASSOCIATES LLP
ENGINEERS, SURVEYORS, PLANNERS & LANDSCAPE ARCHITECTS
11 WINNERS CIRCLE ALBANY, NEW YORK, 12205

STATE OF VERMONT
AGENCY OF TRANSPORTATION

Town Of SEARSBURG	Bridge No. 25A
	Log Sta.
Highway No. VT. RTE. 9	Surv. Sta.
VT. RTE. 9 OVER DEERFIELD RIVER	
GIRDER ELEAVATION - BR 25A	
Designed By D. VIENI	Drawn by J. LAGONE/K. DETRICK
Checked By M. OLSTAD Date 12/2001	Bridge Design Supervisor M. OLSTAD Date 12/2001
PROJECT SEARSBURG - WILMINGTON	PROJECT NO. NHF 010-K(18)
I.G.C. Info.	
Bridge Sheet No. BR312	Sheet 176 OF 435

FILE NAME = u:\9755\vest\15\BRDG25A\25a_streleva.plt
DATE/TIME = 12/17/2001
USER = 664

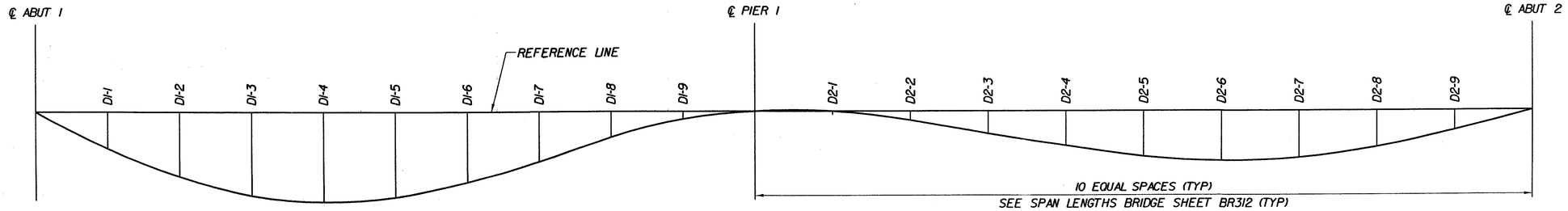

DEAD LOAD DEFLECTION DIAGRAM - BR 25A

DEFLECTION NOTES:

1. DEAD LOAD DEFLECTIONS AS SHOWN INCLUDES STEEL, DECK CONCRETE, CURB, RAILING, AND WEARING SURFACE.
2. DEFLECTIONS ARE TABULATED IN INCHES.

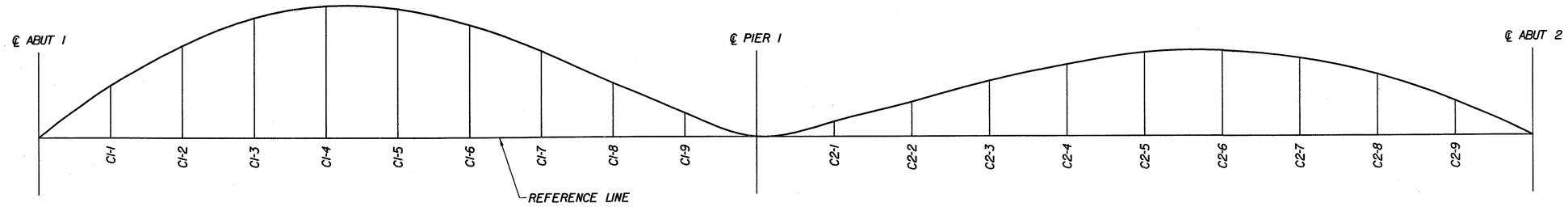

CAMBER DIAGRAM - BR 25A

CAMBER NOTES:

1. CAMBERS ARE TABULATED IN INCHES
2. THE TOTAL CAMBER IS THE SUM OF STEEL DEAD LOAD, CONCRETE DEAD LOAD, SUPERIMPOSED DEAD LOAD AND RESIDUAL CAMBER. ALL CAMBER OFFSETS ARE MEASURED VERTICALLY TO THE TOP OF WEB FROM A STRAIGHT REFERENCE LINE DRAWN FROM THE INTERSECTION OF TOP OF WEB AND CENTERLINE OF BEARINGS AT ONE END OF GIRDER TO THE CORRESPONDING POINT AT THE OTHER END OF THE GIRDER.
3. POSITIVE NUMBERS IN THE TABLE ARE ABOVE THE STRAIGHT REFERENCE LINE.
4. NEGATIVE NUMBERS IN THE TABLE ARE BELOW THE STRAIGHT REFERENCE LINE.

DEAD LOAD DEFLECTIONS - BR 25A

STRINGER	℄ ABUT. 1	D1-1	D1-2	D1-3	D1-4	D1-5	D1-6	D1-7	D1-8	D1-9	℄ PIER 1	D2-1	D2-2	D2-3	D2-4	D2-5	D2-6	D2-7	D2-8	D2-9	℄ ABUT. 2
G1	0"	-1 7/16"	-2 5/8"	-3 7/16"	-3 11/16"	-3 1/2"	-2 15/16"	-2 1/16"	-1 1/8"	-0 7/16"	0"	0"	-0 5/16"	-0 13/16"	-1 3/8"	-1 13/16"	-2"	-1 7/8"	-1 1/2"	-0 13/16"	0"
G2	0"	-1 3/8"	-2 1/2"	-3 1/4"	-3 9/16"	-3 7/16"	-2 7/8"	-2 1/16"	-1 1/8"	-0 7/16"	0"	0"	-0 1/4"	-0 3/4"	-1 1/4"	-1 11/16"	-1 7/8"	-1 13/16"	-1 7/16"	-0 13/16"	0"
G3	0"	-1 5/16"	-2 7/16"	-3 3/16"	-3 1/2"	-3 3/8"	-2 7/8"	-2 1/16"	-1 3/16"	-0 7/16"	0"	0"	-0 1/4"	-0 11/16"	-1 3/16"	-1 9/16"	-1 3/4"	-1 11/16"	-1 5/16"	-0 3/4"	0"
G4	0"	-1 5/16"	-2 7/16"	-3 3/16"	-3 1/2"	-3 3/8"	-2 7/8"	-2 1/16"	-1 3/16"	-0 7/16"	0"	0 1/16"	-0 3/16"	-0 5/8"	-1 1/8"	-1 1/2"	-1 11/16"	-1 9/16"	-1 1/4"	-0 11/16"	0"
G5	0"	-1 3/8"	-2 1/2"	-3 1/4"	-3 9/16"	-3 7/16"	-2 7/8"	-2 1/16"	-1 3/16"	-0 7/16"	0"	0 1/16"	-0 3/16"	-0 9/16"	-1"	-1 3/8"	-1 9/16"	-1 1/2"	-1 3/16"	-0 11/16"	0"

TOTAL CAMBER - BR 25A

STRINGER	℄ ABUT. 1	C1-1	C1-2	C1-3	C1-4	C1-5	C1-6	C1-7	C1-8	C1-9	℄ PIER 1	C2-1	C2-2	C2-3	C2-4	C2-5	C2-6	C2-7	C2-8	C2-9	℄ ABUT. 2
G1	0"	2 3/16"	3 1/8"	5 1/16"	5 9/16"	5 1/16"	4 3/4"	3 5/8"	2 1/4"	1"	0"	0 5/8"	1 7/16"	2 5/16"	3 1/16"	3 9/16"	3 11/16"	3 5/16"	2 9/16"	1 7/16"	0"
G2	0"	2"	3 11/16"	4 3/16"	5 3/8"	5 5/16"	4 11/16"	3 5/8"	2 3/8"	1 1/16"	0"	0 5/8"	1 3/8"	2 1/4"	2 5/8"	3 1/16"	3 1/2"	3 3/16"	2 1/2"	1 3/8"	0"
G3	0"	2"	3 5/8"	4 3/4"	5 5/16"	5 1/4"	4 11/16"	3 5/8"	2 3/8"	1 1/16"	0"	0 9/16"	1 5/16"	2 1/8"	2 13/16"	3 5/16"	3 3/8"	3 1/8"	2 1/16"	1 3/8"	0"
G4	0"	2"	3 9/16"	4 11/16"	5 1/4"	5 1/4"	4 11/16"	3 5/8"	2 3/8"	1 1/16"	0"	0 9/16"	1 5/16"	2 1/16"	2 3/4"	3 3/16"	3 1/4"	3"	2 5/16"	1 5/16"	0"
G5	0"	2"	3 5/8"	4 3/4"	5 5/16"	5 1/4"	4 11/16"	3 11/16"	2 3/8"	1 1/8"	0"	0 9/16"	1 1/4"	2"	2 5/8"	3 1/16"	3 3/16"	2 7/8"	2 1/4"	1 1/4"	0"

CLOUGH, HARBOUR & ASSOCIATES LLP
ENGINEERS, SURVEYORS, PLANNERS & LANDSCAPE ARCHITECTS
11 WINNERS CIRCLE ALBANY, NEW YORK, 12205

STATE OF VERMONT
AGENCY OF TRANSPORTATION

Town Of SEARSBURG	Bridge No. 25A
Highway No. VT. RTE. 9	Log Sta. / Surv. Sta.
VT. RTE. 9 OVER DEERFIELD RIVER	
CAMBER & DEAD LOAD DEFLECTION - BR 25A	
Designed By D. VIENI	Drawn by K. DETRICK
Checked By M. OLSTAD Date 12/2001	Bridge Design Supervisor M. OLSTAD Date 12/2001
PROJECT SEARSBURG - WILMINGTON	PROJECT NO. NHF 010-1(18)
L.G.C. Info.	
Bridge Sheet No. BR313	Sheet 177 OF 435

FILE NAME =u:\9795\westn\15\BRD025A\25a_camber.plt
DATE/TIME = 12/4/2001
USER = 664

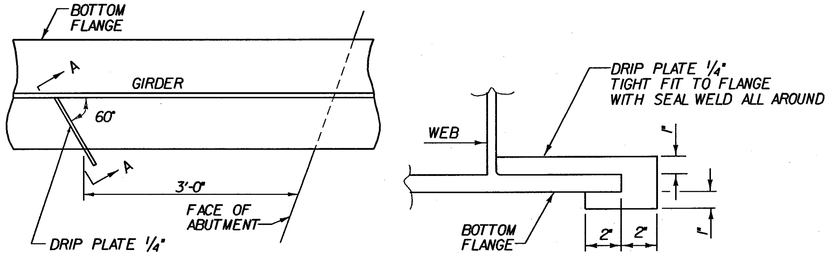

7 BR311 PLAN DRIP PLATE

SECTION A-A

NOTE: DRIP PLATES SHALL BE PLACED ON OUTSIDE EDGE OF FASCIA GIRDERS ON THE HIGH SIDE OF ALL PIERS, SPLICE AND ABUTMENTS OR AS INDICATED ON PROJECT PLANS.

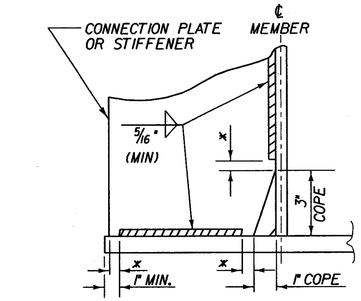

* NO WELD FOR 1/4" MIN. 1/2" MAX.
(EXCEPT MUST MAINTAIN 1" MINIMUM FROM EDGE OF FLANGE)

WELD TERMINATION AND COPING DETAILS FOR STEEL MEMBERS
(NOT TO SCALE)

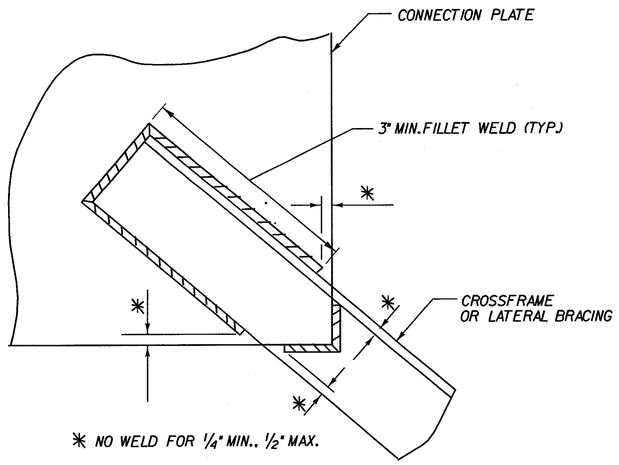

* NO WELD FOR 1/4" MIN., 1/2" MAX.

WELD LOCATION DETAIL AT CROSSFRAMES AND LATERAL BRACING
(NOT TO SCALE)

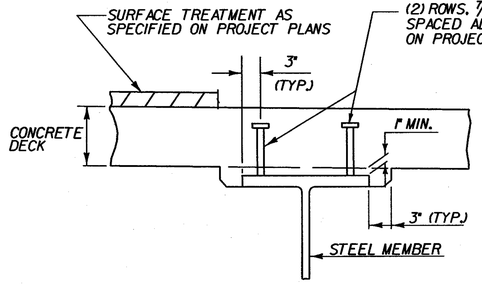

HAUNCH AND SHEAR CONNECTOR DETAILS
(NOT TO SCALE)

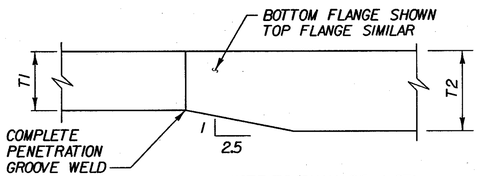

NOTE: T2 SHALL BE ≤ 2T1.

1 BR312 FLANGE THICKNESS TAPER
(NOT TO SCALE)

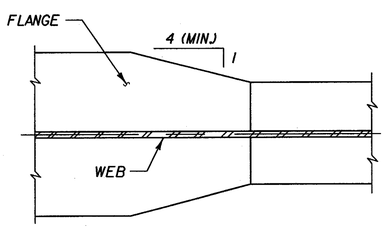

2 BR312 FLANGE WIDTH TAPER
(NOT TO SCALE)

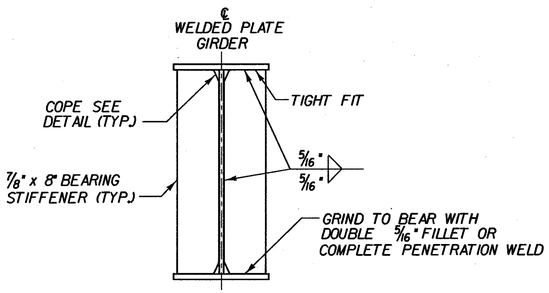

ABUTMENT BEARING STIFFENERS FOR WELDED PLATE GIRDERS
(NOT TO SCALE)

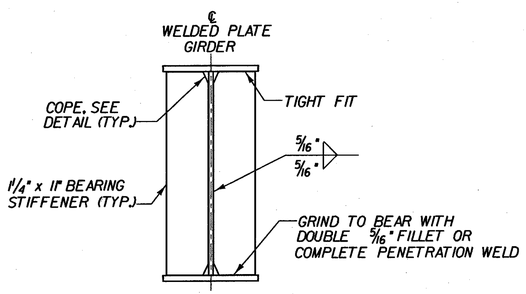

PIER BEARING STIFFENERS FOR WELDED PLATE GIRDERS
(NOT TO SCALE)

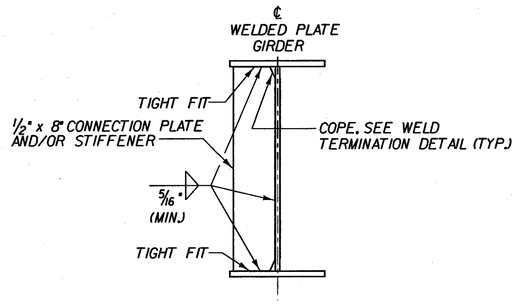

INTERMEDIATE CONNECTION PLATES AND/OR STIFFENERS FOR WELDED PLATE GIRDERS
(NOT TO SCALE)

FILE NAME = u:\9755\MSTN\15\BRDG25A\25a_dets.DGN
DATE/TIME = 02/26/02
USER = 2225

STATE OF VERMONT
AGENCY OF TRANSPORTATION

Town Of SEARSBURG	Bridge No. 25A
Highway No. VT. RTE. 9	Log Sta. / Surv. Sta.
VT. RTE. 9 OVER DEERFIELD RIVER	
GIRDER DETAILS - BR 25A	
Designed By D. VIENI	Drawn by K. DETRICK
Checked By M. OLSTAD Date 2/2002	Bridge Design Supervisor M. OLSTAD Date 2/2002
PROJECT SEARSBURG - WILMINGTON	PROJECT NO. NHF 010-1(8)
I.G.C. Info.	
Bridge Sheet No. BR314	Sheet 178 OF 435

CHA CLOUGH, HARBOUR & ASSOCIATES LLP
ENGINEERS, SURVEYORS, PLANNERS & LANDSCAPE ARCHITECTS
11 WINNERS CIRCLE ALBANY, NEW YORK, 12205

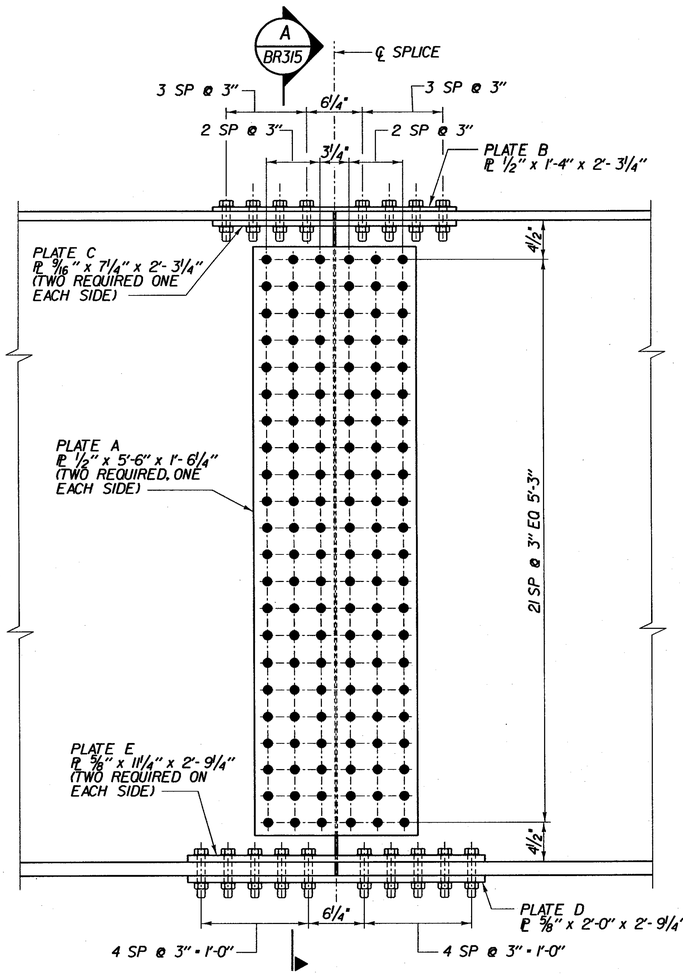

TYPE I GIRDER SPLICE ELEVATION

SCALE 1½" = 1'-0

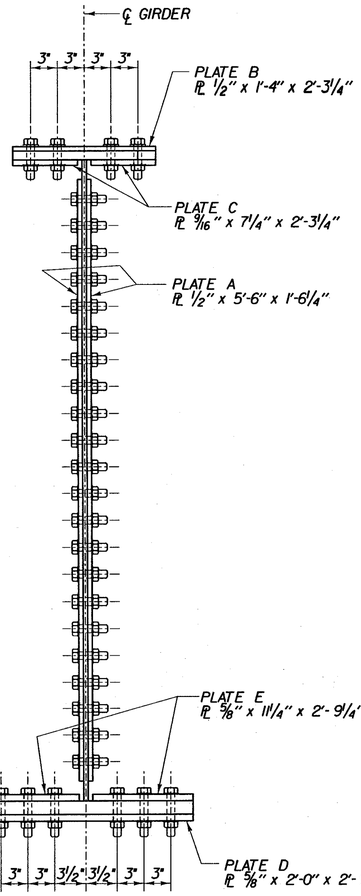

A BR315 TYPE I GIRDER SPLICE SECTION

SCALE 1½" = 1'-0

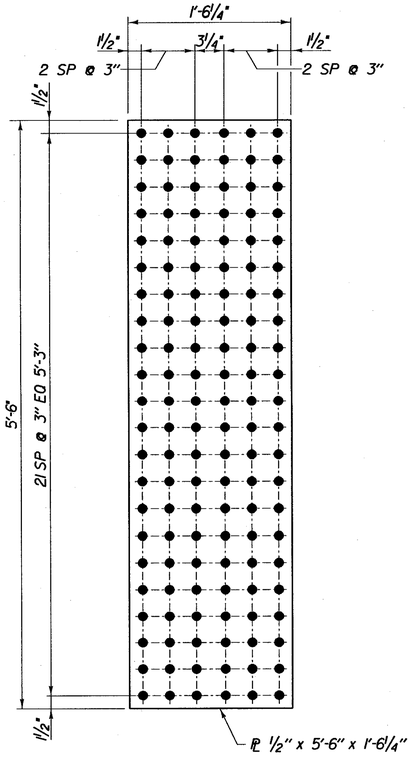

DETAIL - PLATE A

SCALE 1½" = 1'-0

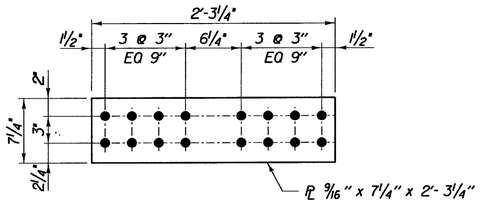

DETAIL - PLATE C

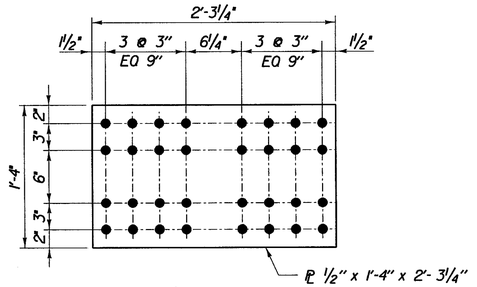

DETAIL - PLATE B

SCALE 1½" = 1'-0

FIELD SPLICE NOTES:

1. FOR LOCATION AND TYPE OF GIRDER SPLICES SEE BR312.
2. ALL BOLTS SHALL BE ⅞ Ø A325 BOLTS AND SHALL CONFORM TO THE REQUIREMENTS OF AASHTO M164.
3. ALL SPLICE PLATES AND FILLER PLATES SHALL CONFORM TO THE REQUIREMENTS OF AASHTO M270M GR50W STEEL.
4. NUTS TO BE ON INSIDE FACE OF WEB SPLICE AT FASCIA GIRDERS.
5. NUTS TO BE DOWN ON ALL FLANGE SPLICES.
6. COST OF FIELD SPLICES TO BE INCLUDED IN THE PRICE BID FOR ITEM 506.55.
7. BOLTED CONNECTIONS SHALL HAVE THREADS EXCLUDED FROM THE SHEAR PLANES.
8. CONTACT SURFACES OF BOLTED PARTS SHALL BE CLASS B (SLIP COEF. 0.50).
9. ALL SPLICE PLATES TO BE CVN TESTED.

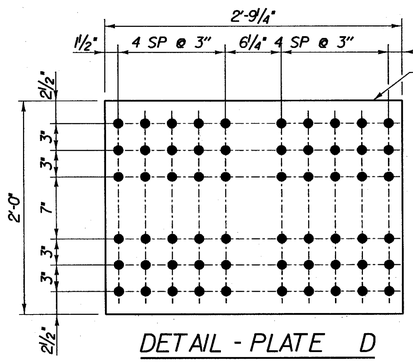

DETAIL - PLATE D

SCALE 1½" = 1'-0

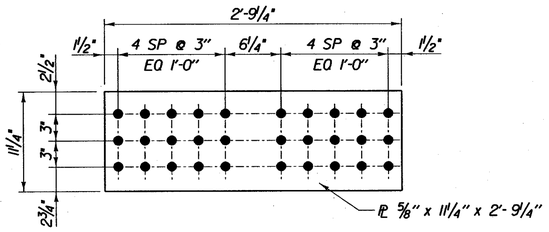

DETAIL - PLATE E

SCALE 1½" = 1'-0

STATE OF VERMONT
AGENCY OF TRANSPORTATION

Town Of SEARSBURG	Bridge No. 25A
	Log Sta.
Highway No. VT. RTE. 9	Surv. Sta.

VT. RTE. 9 OVER DEERFIELD RIVER

GIRDER SPLICE TYPE I

Designed By D. VIENI	Drawn by J. LAGONE
Checked By M. OLSTAD Date 2/2002	Bridge Design Supervisor M. OLSTAD Date 2/2002
PROJECT SEARSBURG - WILMINGTON	PROJECT NO. NHF 010-K181
I.G.C. Info.	
Bridge Sheet No. BR315	Sheet 179 OF 435

CHA CLOUGH, HARBOUR & ASSOCIATES LLP
ENGINEERS, SURVEYORS, PLANNERS & LANDSCAPE ARCHITECTS
11 WINNERS CIRCLE ALBANY, NEW YORK, 12205

FILE NAME =u:\9755\VNSTN\15\BR00254\25a_splicepls.DGN
DATE/TIME =02/20/02
USER =2225

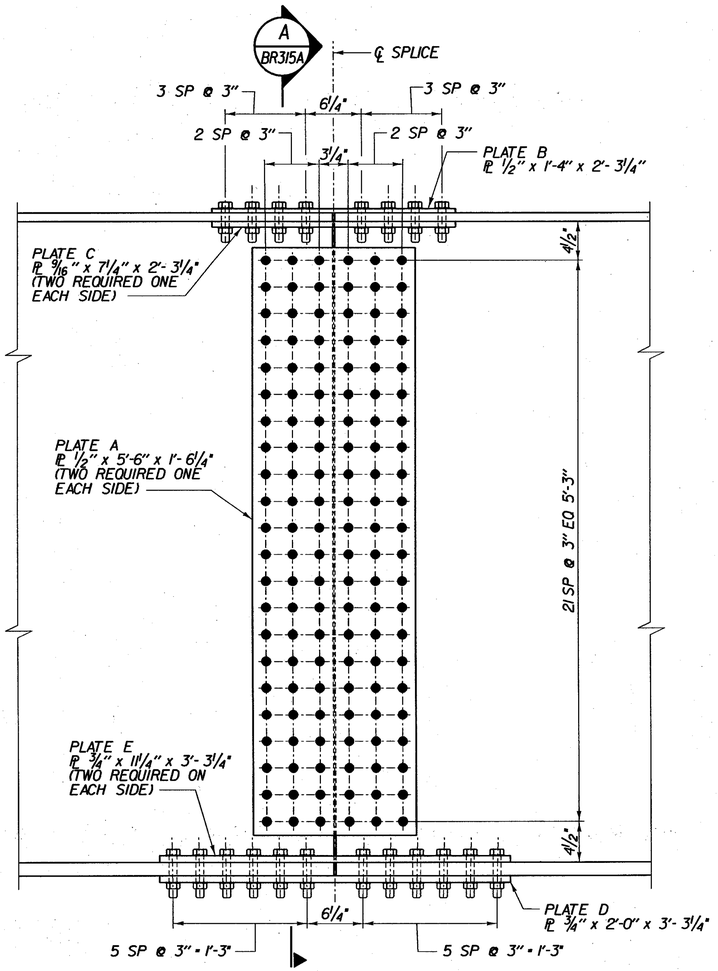

TYPE 2 GIRDER SPLICE ELEVATION

SCALE 1½" = 1'-0

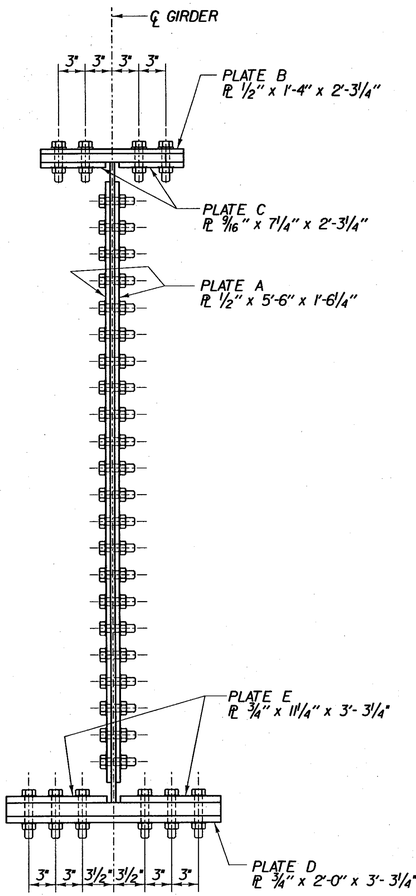

A BR315A

TYPE 2 GIRDER SPLICE SECTION

SCALE 1½" = 1'-0

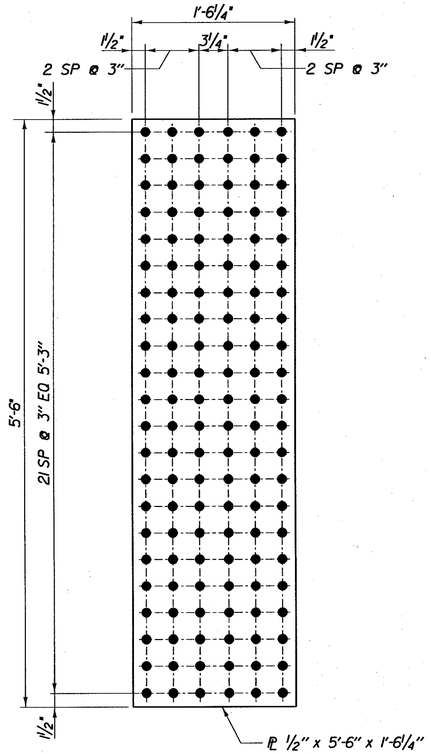

DETAIL - PLATE A

SCALE 1½" = 1'-0

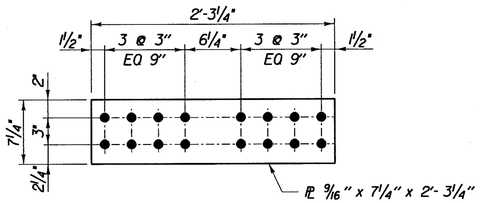

DETAIL - PLATE C

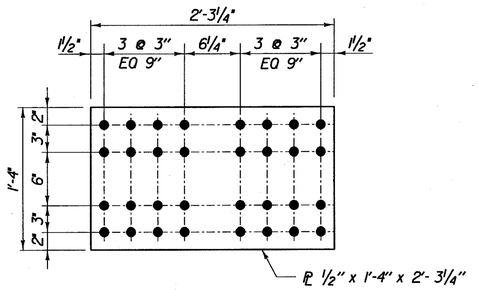

DETAIL - PLATE B

SCALE 1½" = 1'-0

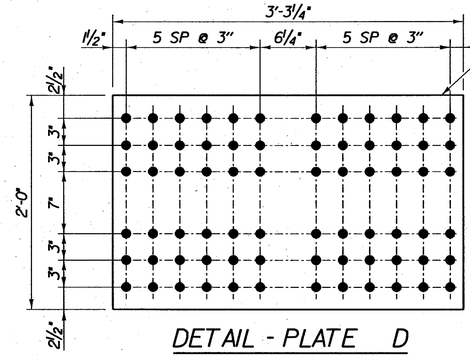

DETAIL - PLATE D

SCALE 1½" = 1'-0

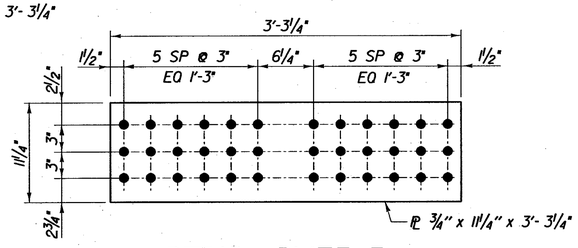

DETAIL - PLATE E

SCALE 1½" = 1'-0

FILE NAME =u:\9755\MSTN\15\BRDG25A\25a_splicep1.DGN
DATE/TIME = 02/28/02
USER = 2225

STATE OF VERMONT
AGENCY OF TRANSPORTATION

Town Of SEARSBURG	Bridge No. 25A Log Sta.
Highway No. VT. RTE. 9	Surv. Sta.
VT. RTE. 9 OVER DEERFIELD RIVER	
GIRDER SPLICE TYPE 2	
Designed By D. VIENI	Drawn by J. LAGONE
Checked By M. OLSTAD Date 2/2002	Bridge Design Supervisor M. OLSTAD Date 2/2002
PROJECT SEARSBURG - WILMINGTON	PROJECT NO. NHF 010-K18)
L.G.C. Info.	
Bridge Sheet No. BR315A	Sheet 180 OF 435

CHA CLOUGH, HARBOUR & ASSOCIATES LLP
ENGINEERS, SURVEYORS, PLANNERS & LANDSCAPE ARCHITECTS
11 WINNERS CIRCLE ALBANY, NEW YORK, 12205

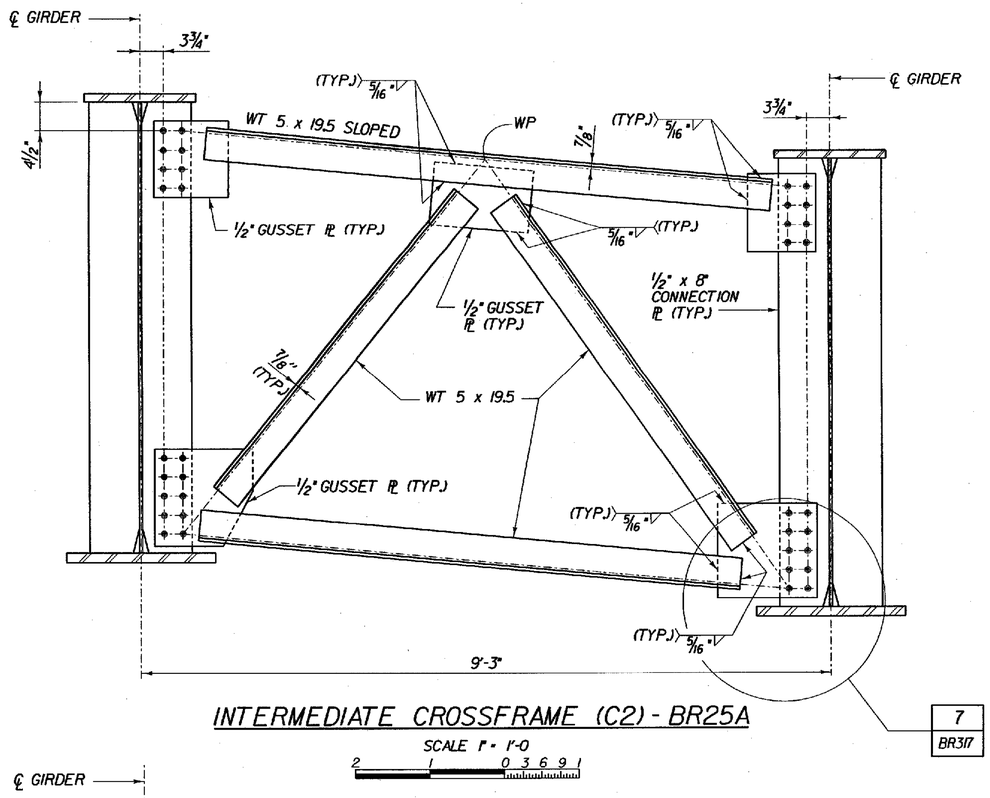

INTERMEDIATE CROSSFRAME (C2) - BR25A

SCALE 1" = 1'-0

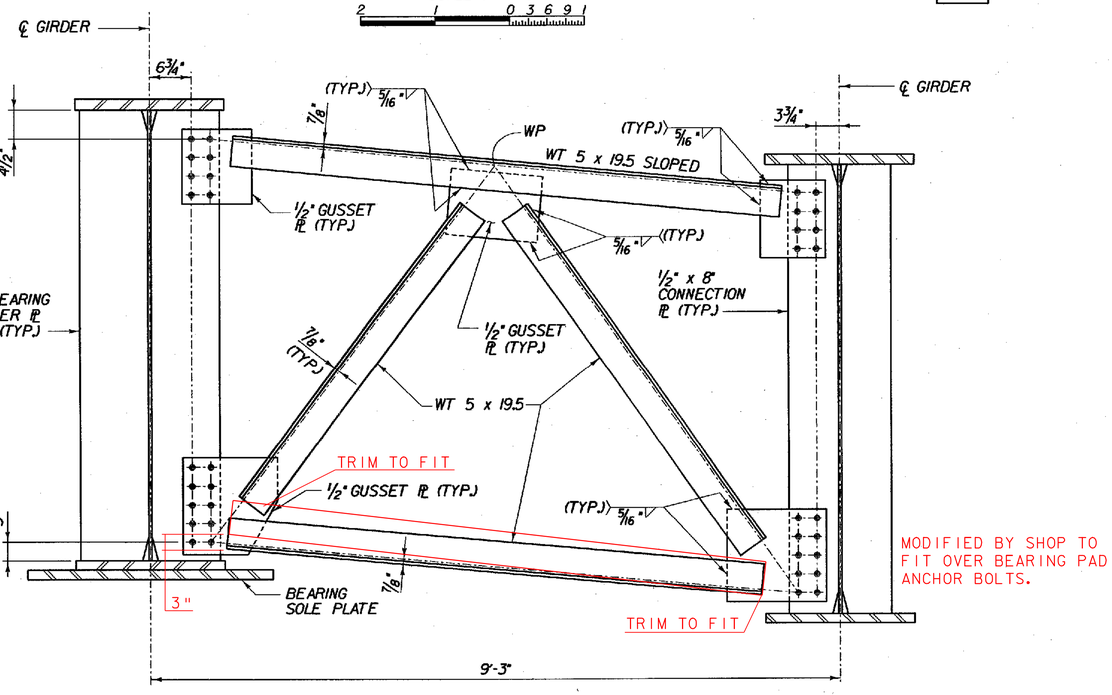

INTERMEDIATE CROSSFRAME AT PIER (C3) - BR25A

SCALE 1" = 1'-0

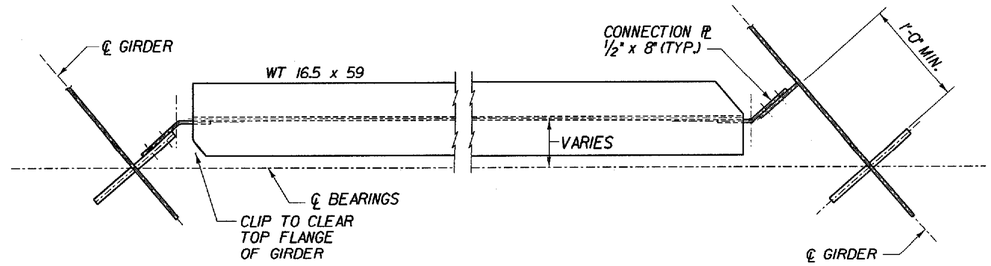

A BR316 ABUTMENT CROSSFRAME (C1) SECTION

SCALE 1" = 1'-0

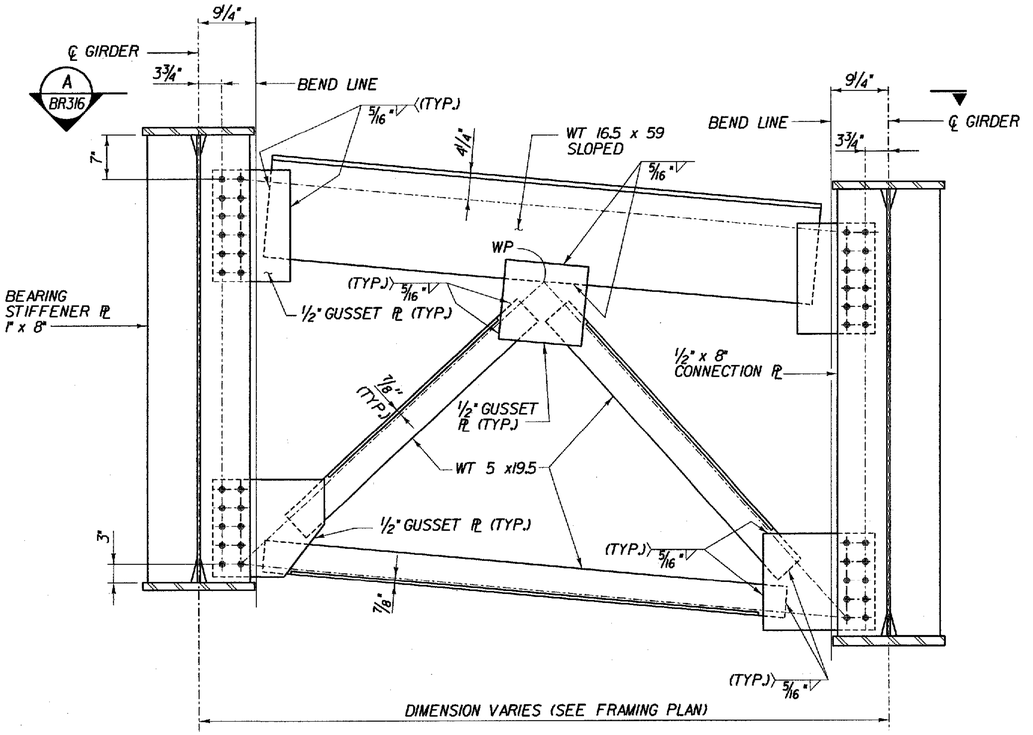

ABUTMENT CROSSFRAME (C1) - BR25A

SCALE 1" = 1'-0

NOTES:

1. ALL CONNECTIONS SHALL BE MADE USING A325 7/8" DIA. BOLTS. ALL HOLES IN THE CONNECTION PLATES SHALL BE 15/16" DIAMETER.
2. THE LENGTHS OF WELDS ON EACH SIDE OF THE WT SHALL BE PROPORTIONED TO MINIMIZE ECCENTRICITIES IN THE CONNECTION.
3. ALL CROSSFRAMES AND CONNECTION PLATES REQUIRE CVN TESTING.
4. SEE BR314 FOR WELD LOCATION DETAIL.

CLOUGH, HARBOUR & ASSOCIATES LLP
ENGINEERS, SURVEYORS, PLANNERS & LANDSCAPE ARCHITECTS
SIMMONS CIRCLE ALBANY, NEW YORK, 12205

STATE OF VERMONT
AGENCY OF TRANSPORTATION

Town Of	SEARSBURG	Bridge No. 25A	
		Log Sta.	
Highway No.	VT. RTE. 9	Surv. Sta.	
VT. RTE. 9 OVER DEERFIELD RIVER			
CROSSFRAME DETAILS - 1 - BR 25A			
Designed By D. VIENI		Drawn by J. LAGONE	
Checked By M. OLSTAD	Date 2/2002	Bridge Design Supervisor M. OLSTAD	Date 2/2002
PROJECT SEARSBURG - WILMINGTON		PROJECT NO. NHF 010-1(18)	
I.G.C. Info.			
Bridge Sheet No. BR316		Sheet 181 OF 435	

FILE NAME =u:\9755\MSTN\15\BRDG25A\25a_dtophs1.DGN
DATE/TIME =02/20/02
USER =2225

THE BEARING STIFFENER OR CONNECTION PL CONNECTIONS CAN USE SHIM PLATES IF NECESSARY.

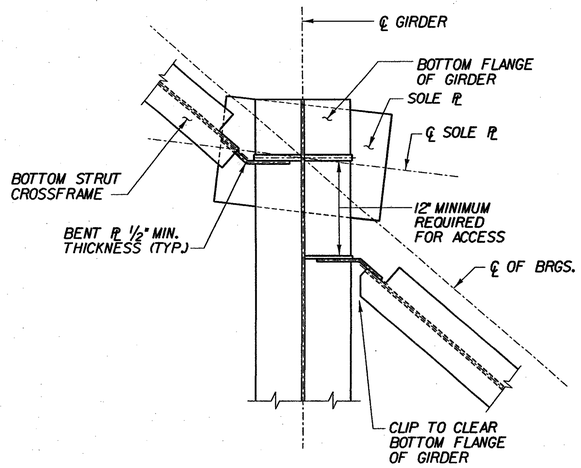

1 BR311 BOTTOM CONN. DETAIL (AT ABUT 1)

SCALE 1" = 1'-0

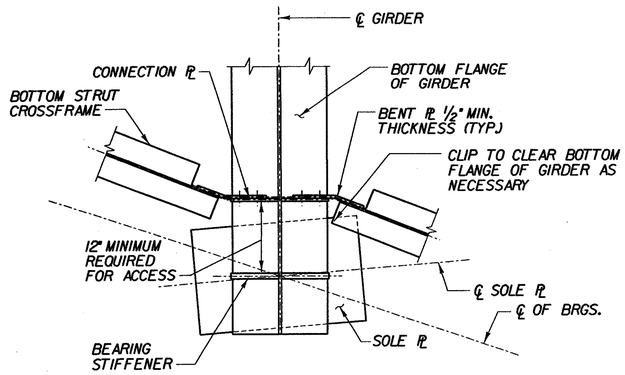

2 BR311 BOTTOM CONN. DETAIL (AT ABUT 2)

SCALE 1" = 1'-0

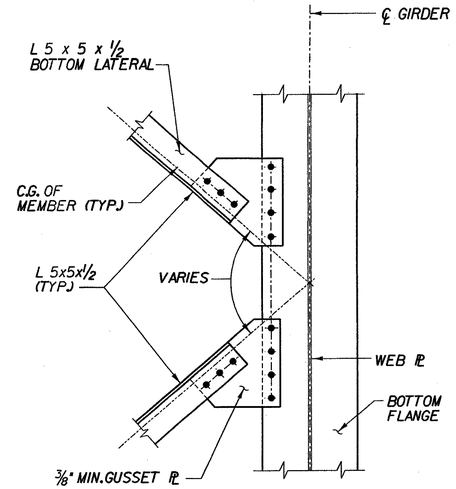

4 BR311 LATERAL BRACING CONN.

SCALE 1" = 1'-0

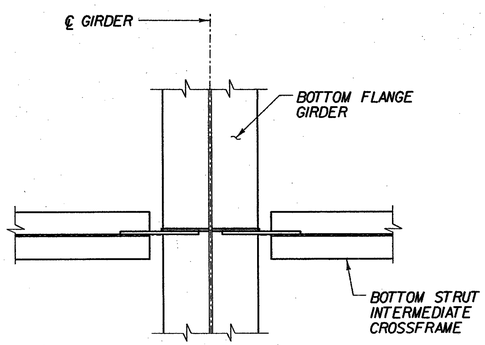

5 BR311 CROSSFRAME BOTTOM CONN.

SCALE 1" = 1'-0

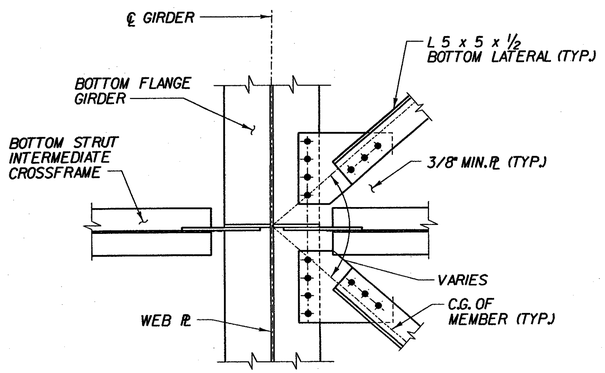

6 BR311 LATERAL BOTTOM CONN.

SCALE 1" = 1'-0

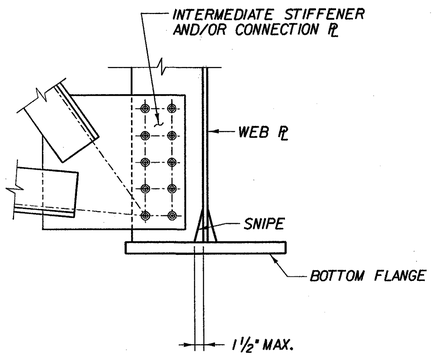

7 BR316 CROSSFRAME DETAIL

SCALE 1" = 1'-0

STATE OF VERMONT
AGENCY OF TRANSPORTATION

Town Of SEARSBURG		Bridge No. 25A
		Log Sta.
Highway No. VT. RTE. 9		Surv. Sta.
VT. RTE. 9 OVER DEERFIELD RIVER		
CROSSFRAME DETAILS - 2 - BR 25A		
Designed By D. VIENI		Drawn by J. LAGONE
Checked By M. OLSTAD	Date 12/2001	Bridge Design Supervisor M. OLSTAD Date 12/2001
PROJECT SEARSBURG - WILMINGTON		PROJECT NO. NHF 010-K(18)
I.G.C. Info.		
Bridge Sheet No. BR317		Sheet 182 OF 435

CHA CLOUGH, HARBOUR & ASSOCIATES LLP
ENGINEERS, SURVEYORS, PLANNERS & LANDSCAPE ARCHITECTS
11 WINNERS CIRCLE ALBANY, NEW YORK, 12205

FILE NAME =u:\9755\MSTN\15\BRDG25A\25a_diap_dets.plt
DATE/TIME =12/12/01
USER =2225

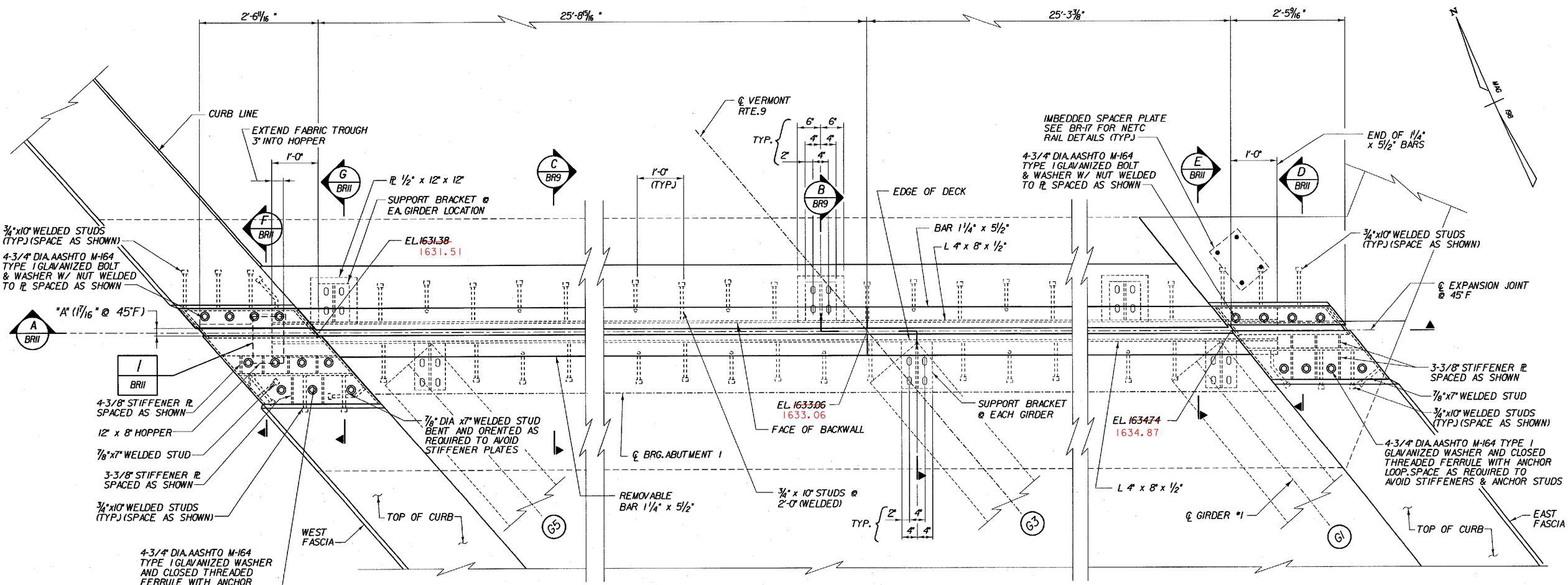

ABUTMENT I EXPANSION JOINT PLAN - BR25A

SCALE 1" = 1'-0

1 9 6 3 0 1 2

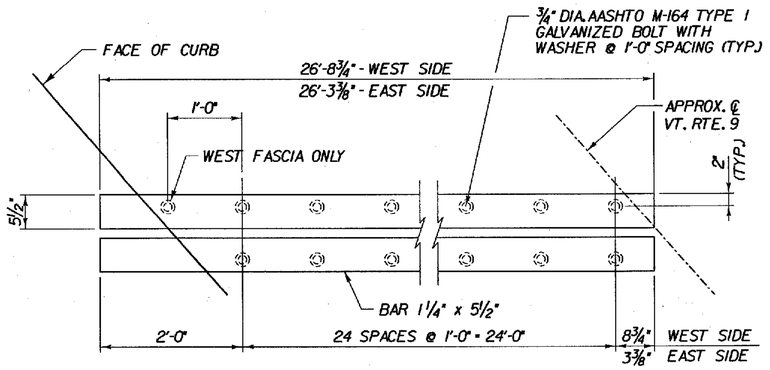

REMOVABLE BARS

SCALE 1" = 1'-0

1 9 6 3 0 1 2

NOTE:

THE BARS SHALL BE FABRICATED IN APPROXIMATELY 2 EQUAL LENGTHS FOR EACH SIDE OF ℄ VT. RTE. 9

TEMP.	DIM. "A"	DIM. "B"
15°F	1 3/4"	4 3/4"
30°F	1 5/8"	4 5/8"
45°F	1 11/16"	4 11/16"
60°F	1 5/16"	4 5/16"
75°F	1 3/16"	4 3/16"
90°F	1"	4"

NOTES:

1. TOP AND FACE OF BRUSH CURB ARE ATTACHED BY BOLTS AND ARE REMOVABLE TO ALLOW CLEANING AND/OR REPLACEMENT OF FABRIC TROUGH.
2. FOR TYPICAL SECTIONS OF EXPANSION JOINT AND ARMORED BRUSH CURB, SEE EXPANSION JOINT DETAILS, BRIDGE SHEET BR9.
3. FOR VIEW OF FASCIA PLATES, AND LOCATION OF WELDED STUDS ON PLATES, SEE EXP. JOINT DETAILS, BRIDGE SHEET BRII.
4. BARS IN ROADWAY ARE REMOVABLE TO ALLOW CLEANING AND/OR REPLACEMENT OF FABRIC TROUGH.
5. WHERE HOPPER IS NOT REQUIRED, PREFORMED FABRIC DRAIN TROUGH SHALL BE TERMINATED AS SHOWN IN TROUGH END DETAIL ON BRIO.

STATE OF VERMONT
AGENCY OF TRANSPORTATION

Town Of SEARSBURG	Bridge No. 25A
Highway No. VT. RTE. 9	Log Sta.
	Surv. Sta.

VT. RTE. 9 OVER DEERFIELD RIVER

"VT TYPE" EXPANSION JOINT DETAIL ABUT. I - BR 25A

Designed By D. VIENI	Drawn by B. DILLENBECK
Checked By M. OLSTAD Date 2/2002	Bridge Design Supervisor M. OLSTAD Date 2/2002
PROJECT SEARSBURG - WILMINGTON	PROJECT NO. NHF 010-1(18)
I.G.C. Info.	
Bridge Sheet No. BR318	Sheet 183 OF 435

CHA CLOUGH, HARBOUR & ASSOCIATES LLP
ENGINEERS, SURVEYORS, PLANNERS & LANDSCAPE ARCHITECTS
11 WINNERS CIRCLE ALBANY, NEW YORK, 12205

FILE NAME = u:\9755\VSTN\15\BRDO25A\25a_expjnt-pln.DGN
DATE/TIME = 02/28/02
USER = 2225

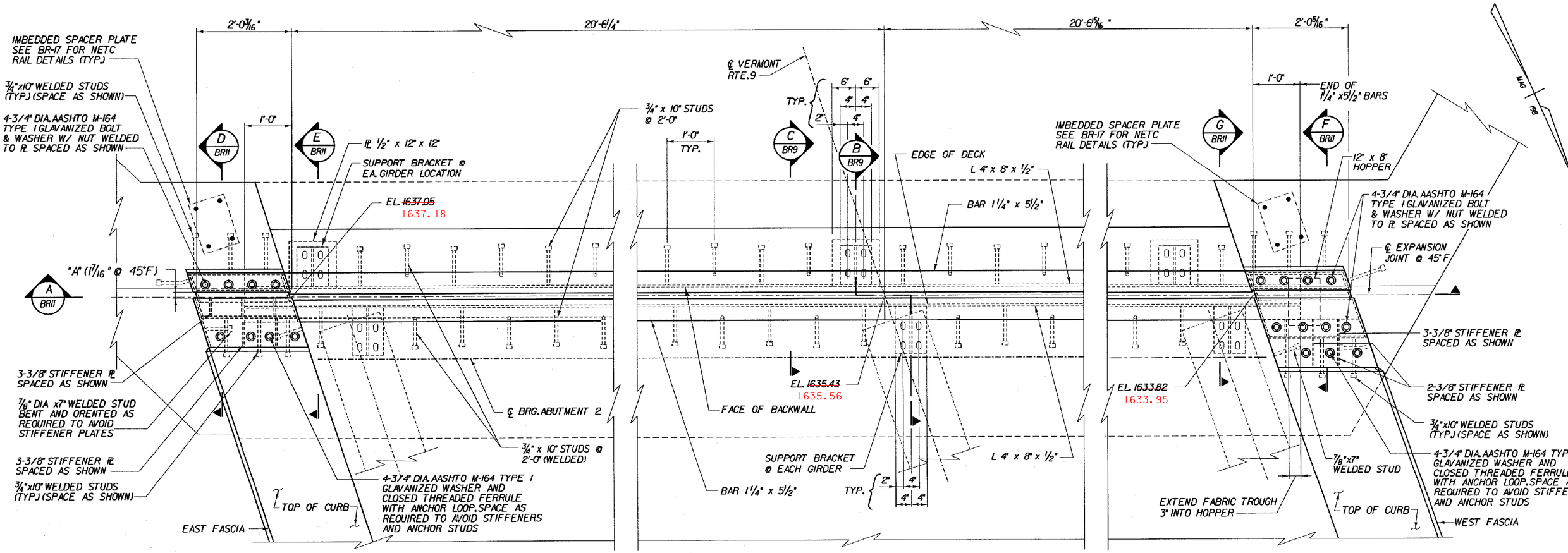

ABUTMENT 2 EXPANSION JOINT PLAN - BR25A

SCALE 1" = 1'-0

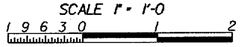

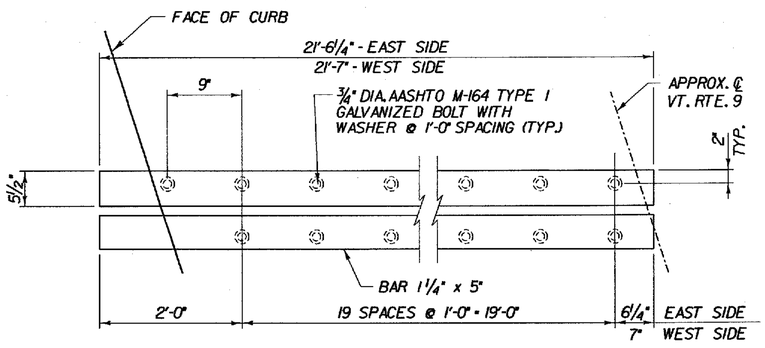

REMOVABLE BARS

SCALE 1" = 1'-0

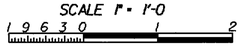

NOTE:

THE BARS SHALL BE FABRICATED IN APPROXIMATELY 2 EQUAL LENGTHS FOR EACH SIDE OF ℄ VT. RTE. 9

TEMP.	DIM. "A"	DIM. "B"
15°F	1 3/4"	4 3/4"
30°F	1 5/8"	4 5/8"
45°F	1 1/16"	4 7/16"
60°F	1 5/16"	4 5/16"
75°F	1 1/8"	4 1/8"
90°F	1"	4"

NOTES:

1. TOP AND FACE OF BRUSH CURB ARE ATTACHED BY BOLTS AND ARE REMOVABLE TO ALLOW CLEANING AND/OR REPLACEMENT OF FABRIC TROUGH.
2. FOR TYPICAL SECTIONS OF EXPANSION JOINT AND ARMORED BRUSH CURB, SEE EXPANSION JOINT DETAILS, BRIDGE SHEET BR9.
3. FOR VIEW OF FASCIA PLATES, AND LOCATION OF WELDED STUDS ON PLATES, SEE EXP. JOINT DETAILS, BRIDGE SHEET BRII.
4. BARS IN ROADWAY ARE REMOVABLE TO ALLOW CLEANING AND/OR REPLACEMENT OF FABRIC TROUGH.
5. WHERE HOPPER IS NOT REQUIRED, PREFORMED FABRIC DRAIN TROUGH SHALL BE TERMINATED AS SHOWN IN TROUGH END DETAIL ON BRIO.

STATE OF VERMONT
AGENCY OF TRANSPORTATION

Town Of SEARSBURG	Bridge No. 25A
Highway No. VT. RTE. 9	Log Sta. / Surv. Sta.
VT. RTE. 9 OVER DEERFIELD RIVER	
"VT TYPE" EXPANSION JOINT DETAIL ABUT. 2 - BR 25A	
Designed By D. VIENI	Drawn by B. DILLENBECK
Checked By M. OLSTAD Date 2/2002	Bridge Design Supervisor M. OLSTAD Date 2/2002
PROJECT SEARSBURG - WILMINGTON	PROJECT NO. NHF 010-K(8)
I.G.C. Info.	
Bridge Sheet No. BR319	Sheet 184 OF 435

CHA CLOUGH, HARBOUR & ASSOCIATES LLP
ENGINEERS, SURVEYORS, PLANNERS & LANDSCAPE ARCHITECTS
8 BORNERS CIRCLE ALBANY, NEW YORK, 12205

FILE NAME = u:\9755\MSTN\SHEETS\BRDGS\25a_exp_joint.DGN
DATE/TIME = 02/26/02
USER = 2225

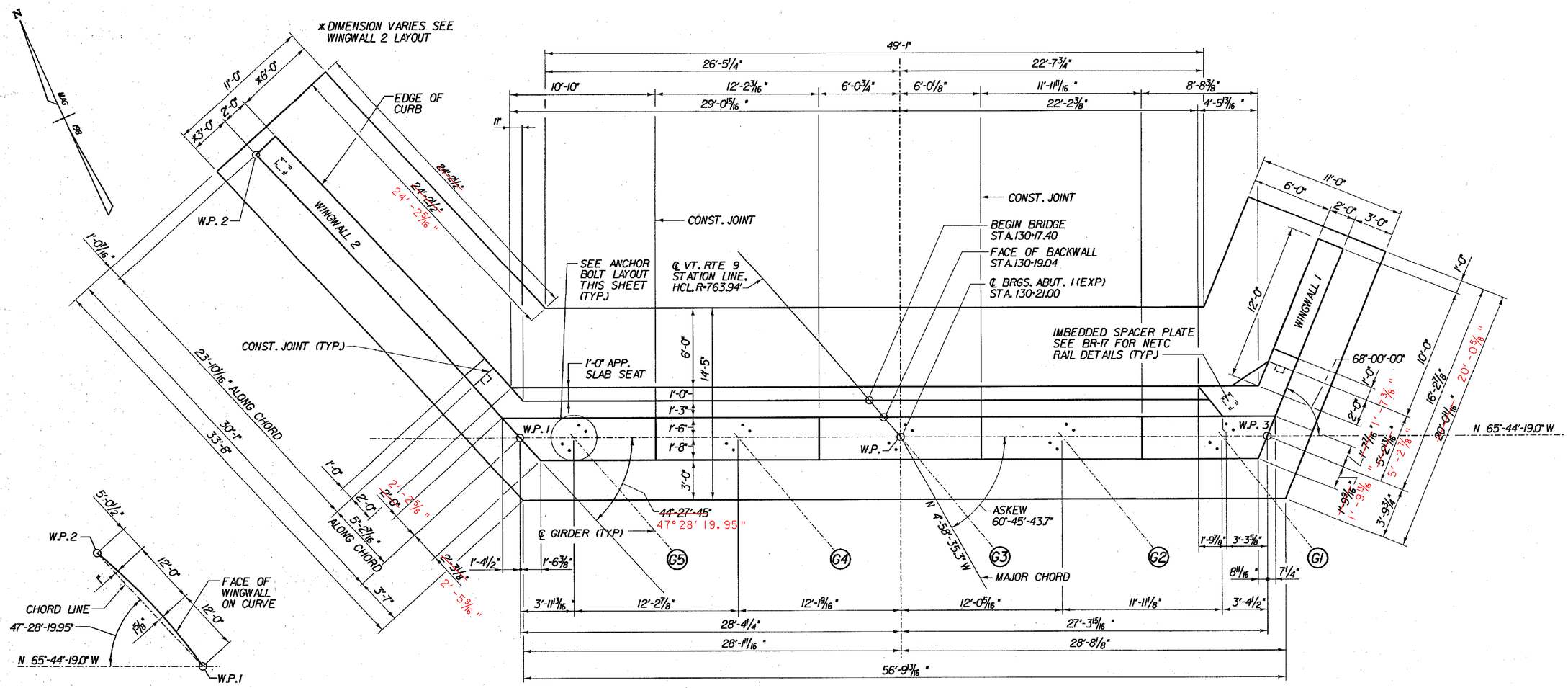

ABUTMENT 1 PLAN - BR 25A

SCALE 1/4" = 1'-0

WINGWALL 2 LAYOUT

N.T.S.

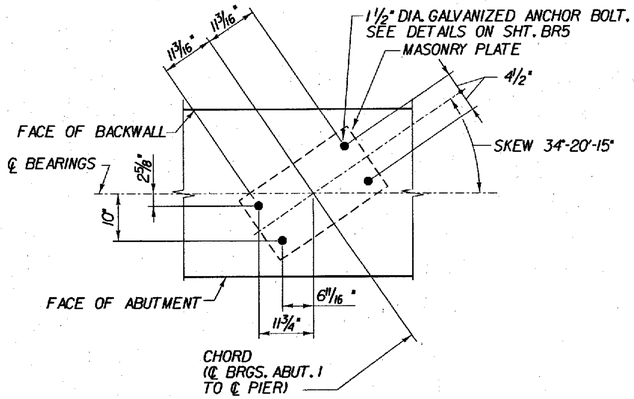

PLAN-ANCHOR BOLT LAYOUT-ABUTMENT 1 - BR 25A

SCALE 3/4" = 1'-0

NOTE:

1. FOR BEARING DETAILS SEE BRIDGE SHEET BR6 AND BR7.
2. FOR CONSTRUCTION JOINT DETAILS SEE BRIDGE SHEET BR15.

STATE OF VERMONT
AGENCY OF TRANSPORTATION

Town Of	SEARSBURG	Bridge No. 25A	
		Log Sta.	
Highway No.	VT. RTE. 9	Surv. Sta.	
VT. RTE. 9 OVER DEERFIELD RIVER			
ABUTMENT 1 PLAN - BR 25A			
Designed By D. VIENI		Drawn by K. DETRICK/Wm WEATHERBY	
Checked By M. OLSTAD	Date 2/2002	Bridge Design Supervisor M. OLSTAD	Date 2/2002
PROJECT SEARSBURG - WILMINGTON		PROJECT NO. NHF 010-K(8)	
L.G.C. Info.			
Bridge Sheet No. BR320		Sheet 185 OF 435	

CLOUGH, HARBOUR & ASSOCIATES LLP
ENGINEERS, SURVEYORS, PLANNERS & LANDSCAPE ARCHITECTS
11 WINNERS CIRCLE ALBANY, NEW YORK, 12205

FILE NAME =GRA7/GRA7SHT1.DGN
DATE/TIME =02/28/02
USER =2225

BRIDGE SEAT #3 ACTUAL: 1625.06

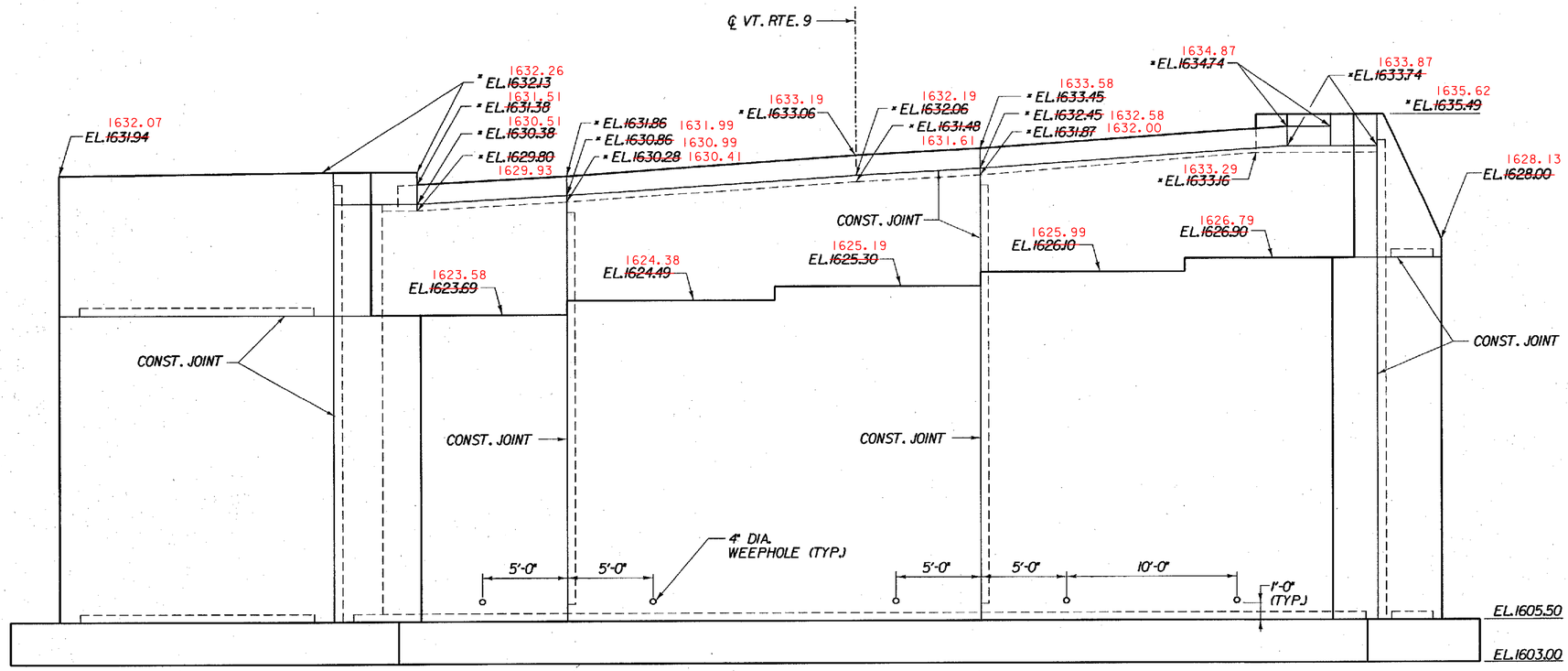

ABUTMENT 1 ELEVATION - BR 25A

SCALE 1/4" = 1'-0

1 0 2 4 6

* ELEVATIONS ARE APPROXIMATE. USED FOR ESTIMATING PURPOSES ONLY. ALL TOP OF BACKWALL ELEVATIONS WILL BE DETERMINED AFTER STRUCTURAL STEEL IS SET.

STATE OF VERMONT
AGENCY OF TRANSPORTATION

Town Of SEARSBURG	Bridge No. 25A
Highway No. VT. RTE. 9	Log Sta.
	Surv. Sta.
VT. RTE. 9 OVER DEERFIELD RIVER	
ABUTMENT 1 ELEVATION - BR 25A	
Designed By D. VIENI	Drawn by Wm WEATHERBY
Checked By M. OLSTAD Date 2/2002	Bridge Design Supervisor M. OLSTAD Date 2/2002
PROJECT SEARSBURG - WILMINGTON	PROJECT NO. NHF 010-1(18)
I.G.C. Info.	
Bridge Sheet No. BR321	Sheet 186 OF 435

CHA CLOUGH, HARBOUR & ASSOCIATES LLP
ENGINEERS, SURVEYORS, PLANNERS & LANDSCAPE ARCHITECTS
8 WINNERS CIRCLE ALBANY, NEW YORK, 12205

FILE NAME =a:\7850\BR\BR25A\25a_abut1.dgn
DATE/TIME =2/28/02
USER =2225

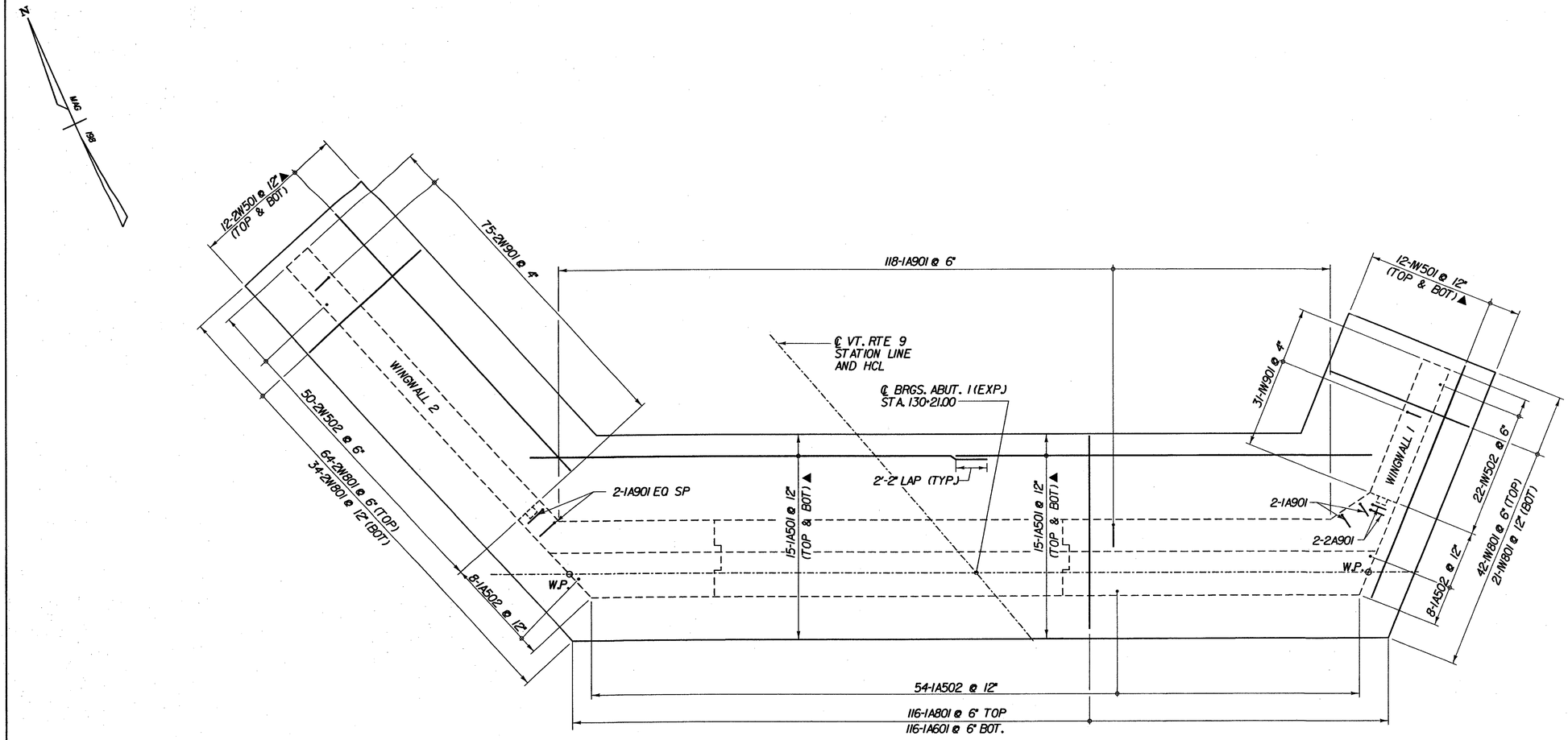

ABUTMENT 1 FOOTING REINFORCING PLAN - BR 25A

SCALE 1/4" = 1'-0

0 2 4 6

KEY:

NF - NEAR FACE
FF - FAR FACE
EF - EACH FACE
▲ - CUT TO FIT IN FIELD
3" CLR. UNLESS OTHERWISE SPECIFIED ON THE PLANS.

STATE OF VERMONT
AGENCY OF TRANSPORTATION

Town Of SEARSBURG	Bridge No. 25A
Highway No. VT. RTE. 9	Log Sta.
	Surv. Sta.
VT. RTE. 9 OVER DEERFIELD RIVER	
ABUTMENT 1 FOOTING REINFORCING - BR 25A	
Designed By D. VIENI	Drawn by K. DETRICK
Checked By M. OLSTAD Date 12/2001	Bridge Design Supervisor M. OLSTAD Date 12/2001
PROJECT SEARSBURG - WILMINGTON	PROJECT NO. NHF 010-1(18)
I.G.C. Info.	
Bridge Sheet No. BR322	Sheet 187 OF 435

CHA CLOUGH, HARBOUR & ASSOCIATES LLP
ENGINEERS, SURVEYORS, PLANNERS & LANDSCAPE ARCHITECTS
11 WINNERS CIRCLE ALBANY, NEW YORK, 12205

FILE NAME =u:\1755\MSTN\15\BRDG25A\25a_abldtsh1.plt
DATE/TIME = 12/12/01
USER = 2223

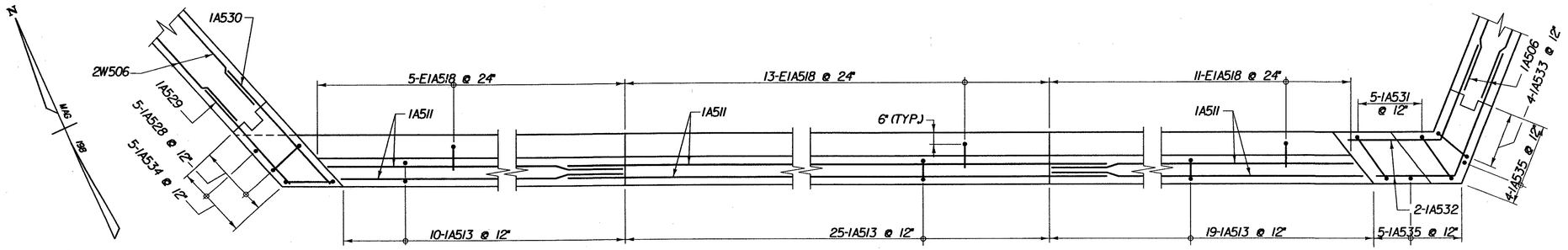

B BR324 TOP OF BACKWALL REINFORCING PLAN - BR 25A

SCALE 3/8" = 1'-0

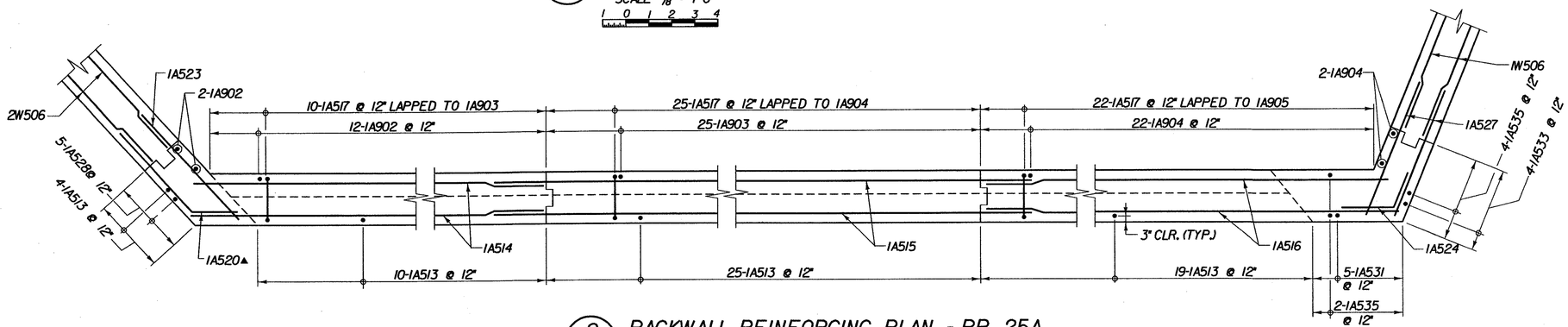

C BR324 BACKWALL REINFORCING PLAN - BR 25A

SCALE 3/8" = 1'-0

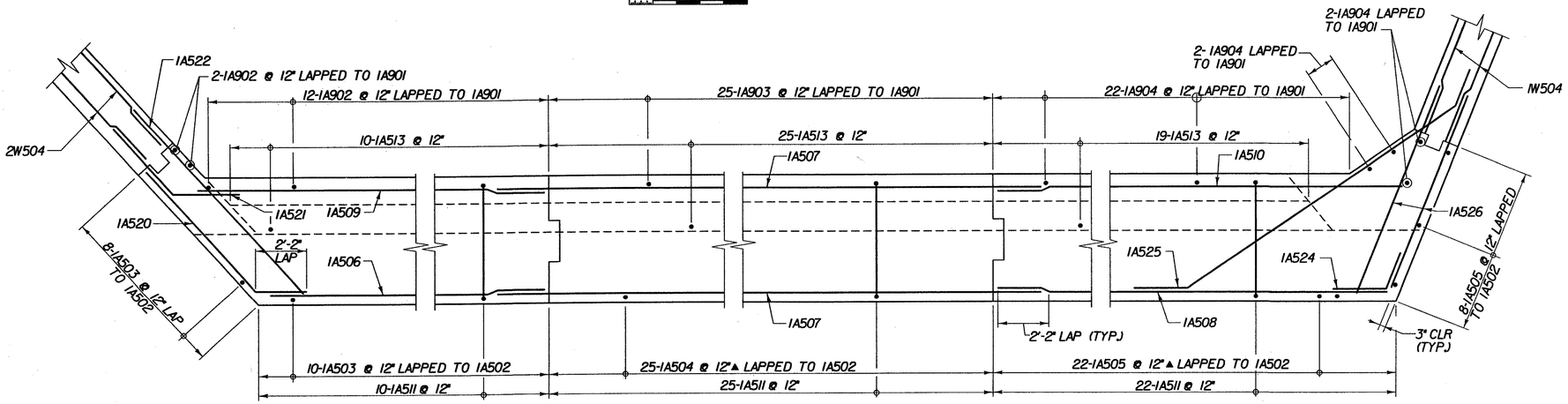

D BR324 STEM REINFORCING PLAN - BR 25A

SCALE 3/8" = 1'-0

KEY:
NF = NEAR FACE
FF = FAR FACE
EF = EACH FACE
▲ = CUT TO FIT IN FIELD
3" CLR. UNLESS OTHERWISE SPECIFIED ON THE PLANS.

STATE OF VERMONT
AGENCY OF TRANSPORTATION

Town Of	SEARSBURG	Bridge No. 25A
Highway No.	VT. RTE. 9	Log Sta.
		Surv. Sta.

VT. RTE. 9 OVER DEERFIELD RIVER

ABUTMENT I REINFORCING - BR 25A

Designed By D. VIENI	Drawn by K. DETRICK/Wm. WEATHERBY
Checked By M. OLSTAD Date 12/2001	Bridge Design Supervisor M. OLSTAD Date 12/2001
PROJECT SEARSBURG - WILMINGTON	PROJECT NO. NHF 010-1(18)
I.G.C. Info.	
Bridge Sheet No. BR323	Sheet 188 OF 435

CHA CLOUGH, HARBOUR & ASSOCIATES LLP
ENGINEERS, SURVEYORS, PLANNERS & LANDSCAPE ARCHITECTS
11 WINNERS CIRCLE ALBANY, NEW YORK, 12205

FILE NAME =u:\9755\mstn\15\BRDG25A\25a_abldtsh2.plt
DATE/TIME =12/13/2001
USER =664

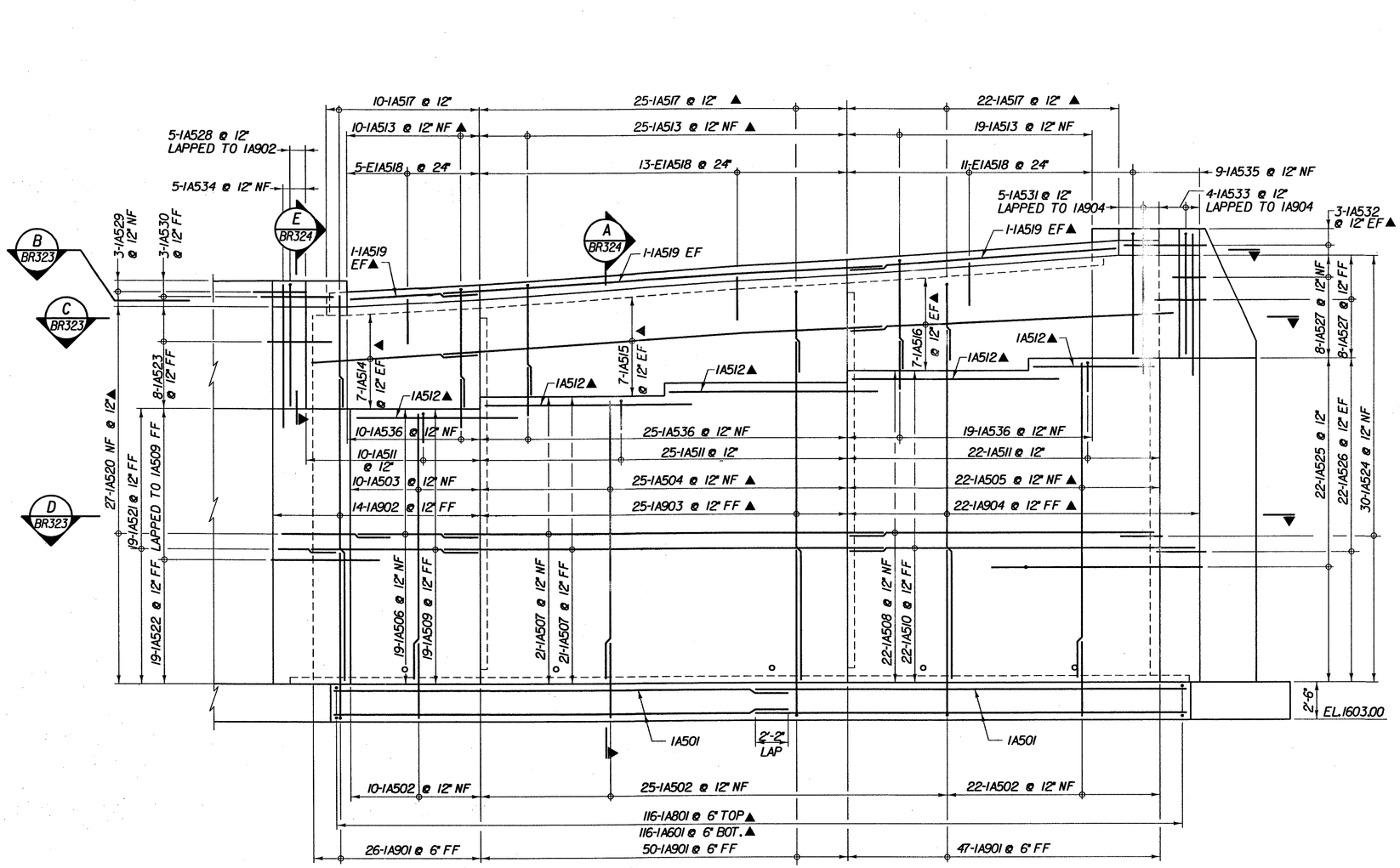

ABUTMENT I REINFORCING ELEVATION - BR 25A

SCALE 1/4" = 1'-0

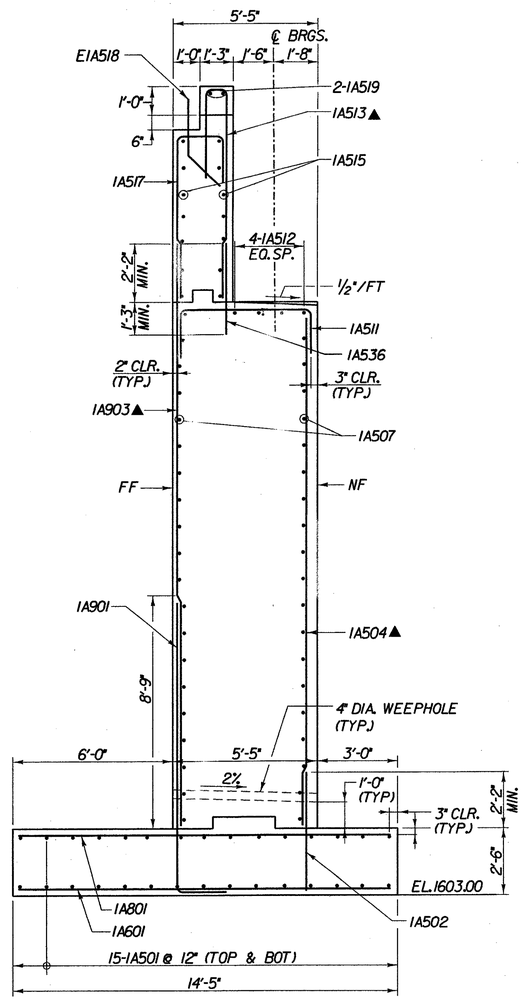

A BR324 ABUTMENT I SECTION - BR 25A

SCALE 3/8" = 1'-0

KEY:
NF - NEAR FACE
FF - FAR FACE
EF - EACH FACE
▲ - CUT TO FIT IN FIELD
3" CLR. UNLESS OTHERWISE SPECIFIED ON THE PLANS.

STATE OF VERMONT
AGENCY OF TRANSPORTATION

Town Of SEARSBURG	Bridge No. 25A
Highway No. VT. RTE. 9	Log Sta.
	Surv. Sta.
VT. RTE. 9 OVER DEERFIELD RIVER	
ABUTMENT I REINFORCING ELEVATION - BR 25A	
Designed By D. VIENI	Drawn by Wm WEATHERBY
Checked By M. OLSTAD Date 12/2001	Bridge Design Supervisor M. OLSTAD Date 12/2001
PROJECT SEARSBURG - WILMINGTON	PROJECT NO. NHF 010-1(18)
L.G.C. Info.	
Bridge Sheet No. BR324	Sheet 189 OF 435

CHA CLOUGH, HARBOUR & ASSOCIATES LLP
ENGINEERS, SURVEYORS, PLANNERS & LANDSCAPE ARCHITECTS
8 WINNERS CIRCLE ALBANY, NEW YORK, 12205

FILE NAME = u:\9755\MSTN\15\BR00025A\25a_abstrenf.plt
DATE/TIME = 12/13/01
USER = 564

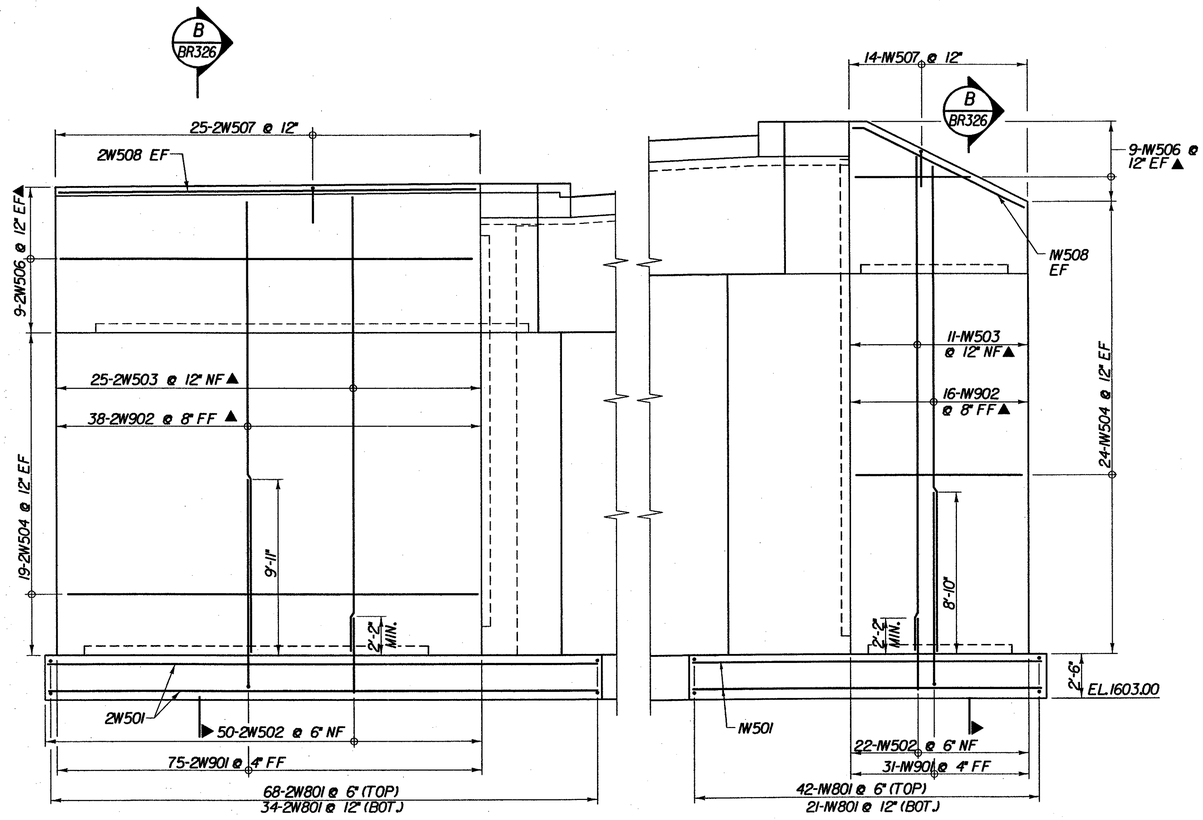

WINGWALL 2 WINGWALL 1

ABUTMENT 1 WINGWALL REINFORCING ELEVATIONS - BR 25A

SCALE 1/4" = 1'-0

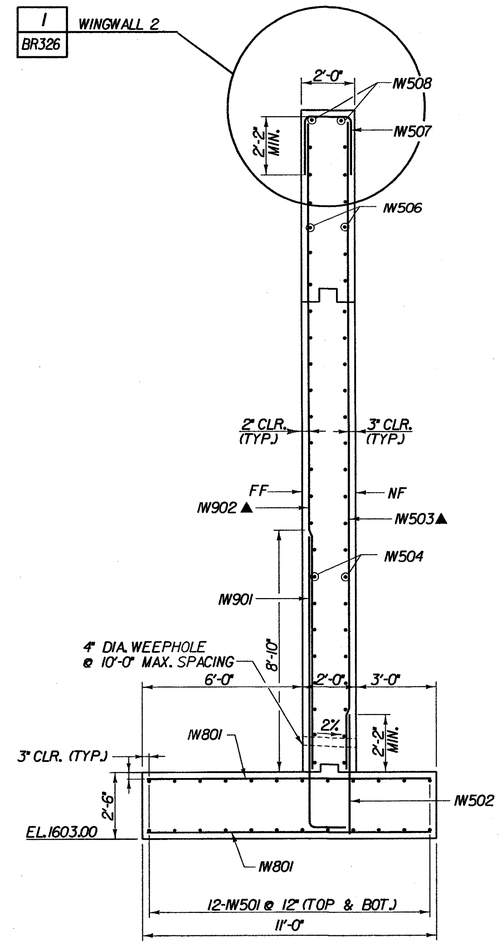

B
BR326
TYPICAL WINGWALL SECTION - BR 25A

(WW 1 SHOWN, WW 2 SIMILAR)

SCALE 3/8" = 1'-0

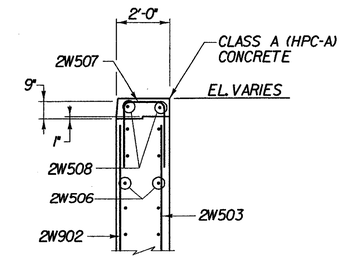

1
BR326
WINGWALL 2 CURB DETAIL

SCALE 3/8" = 1'-0

KEY:

NF - NEAR FACE
FF - FAR FACE
EF - EACH FACE
▲ - CUT TO FIT IN FIELD
3" CLR. UNLESS OTHERWISE SPECIFIED ON THE PLANS.

CLOUGH, HARBOUR & ASSOCIATES LLP
ENGINEERS, SURVEYORS, PLANNERS & LANDSCAPE ARCHITECTS
11 WINNERS CIRCLE ALBANY, NEW YORK, 12205

STATE OF VERMONT
AGENCY OF TRANSPORTATION

Town Of	SEARSBURG	Bridge No. 25A
		Log Sta.
Highway No.	VT. RTE. 9	Surv. Sta.
VT. RTE. 9 OVER DEERFIELD RIVER		
ABUTMENT 1 WINGWALL REINFORCING - BR 25A		
Designed By D. VIENI		Drawn by Wm WEATHERBY
Checked By M. OLSTAD	Date 12/2001	Bridge Design Supervisor M. OLSTAD Date 12/2001
PROJECT SEARSBURG - WILMINGTON		PROJECT NO. NHF 010-1(18)
I.G.C. Info.		
Bridge Sheet No. BR326		Sheet 190 OF 435

FILE NAME =u:\9755\MSTN\15\BRDG25A\25a_abldtsh3.plt
DATE/TIME =12/12/01
USER =2225

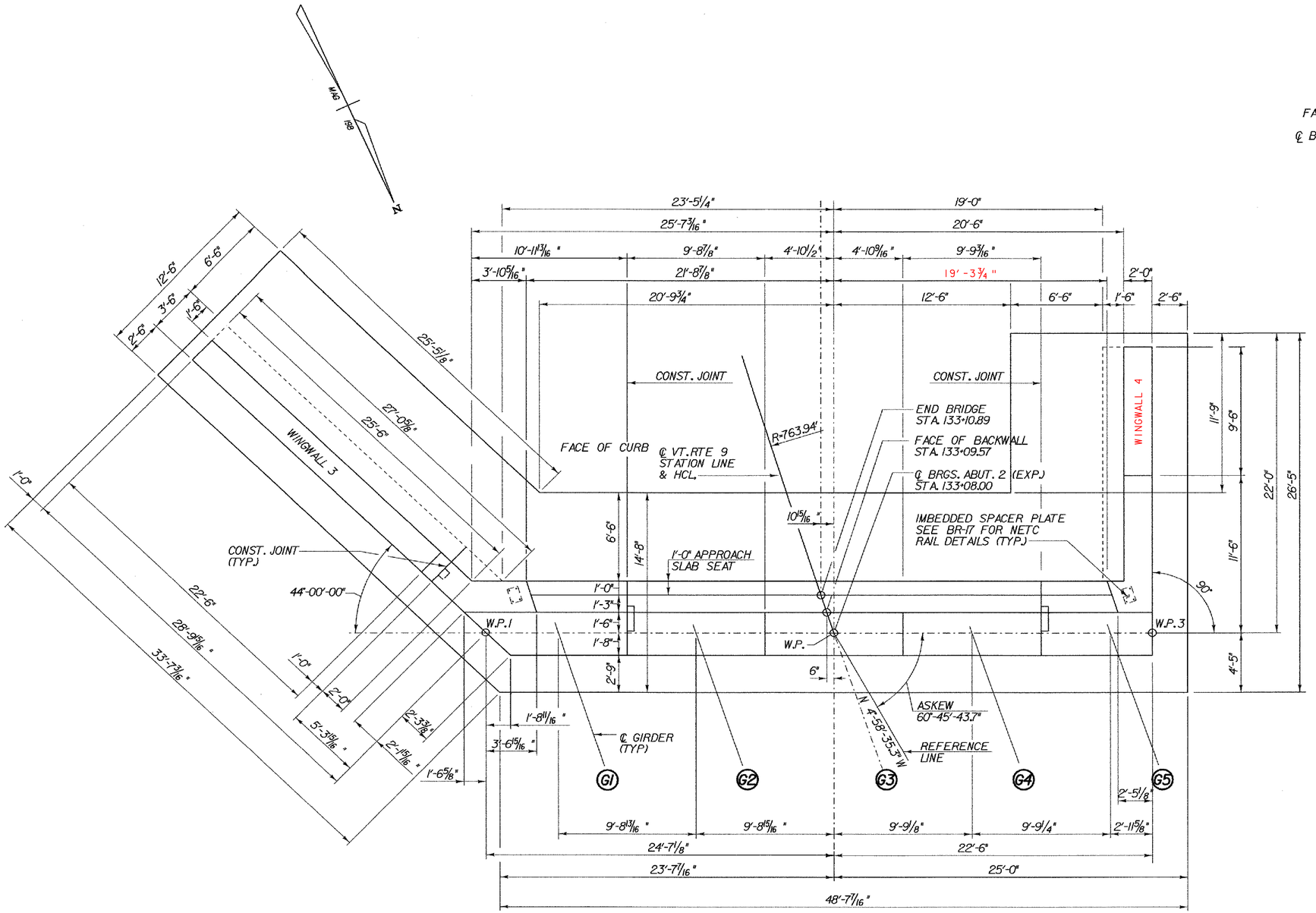

ABUTMENT 2 REDESIGN PLAN - BR 25A

SCALE 1/4" - 1'-0

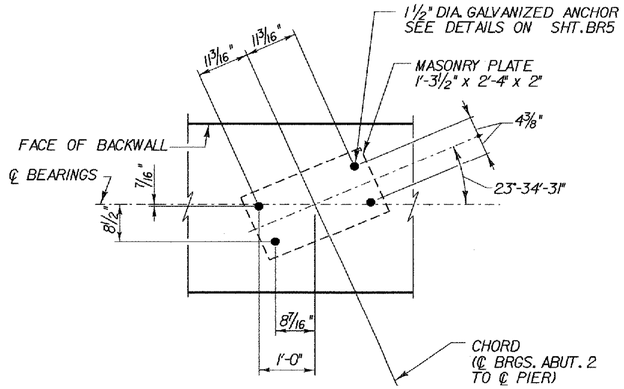

PLAN-ANCHOR BOLT LAYOUT-ABUTMENT 2

SCALE ¾" - 1'-0

NOTES:

1. FOR BEARING DETAIL SEE BRIDGE DRAWING BR5 AND BR7.
2. FOR CONSTRUCTION JOINT DETAIL, SEE BRIDGE DRAWING BR15.

SHEET NAME: ABUTMENT 2 REDESIGN PLAN VIEW	
PROJECT NAME: SEARSBURG	HIGHWAY NO.: ROUTE 9
PROJECT NUMBER: NH F 010-1(18)	BRIDGE NO.: 25A
	OVER: THE DEERFIELD RIVER
FILE NAME: /str4/78d096/25 abut2.dgn	PLOT DATE: 19-FEB-2003
PROJECT MANAGER: R.WHITCOMB	DRAWN BY: J.GILMORE
DESIGNED BY: CH&A LLP	IPARM NAME: br327
BRIDGE SHEET NUMBER: BR327	SHEET 191 OF 435

WINGWALLS AND BACKWALL RAISED 1½"

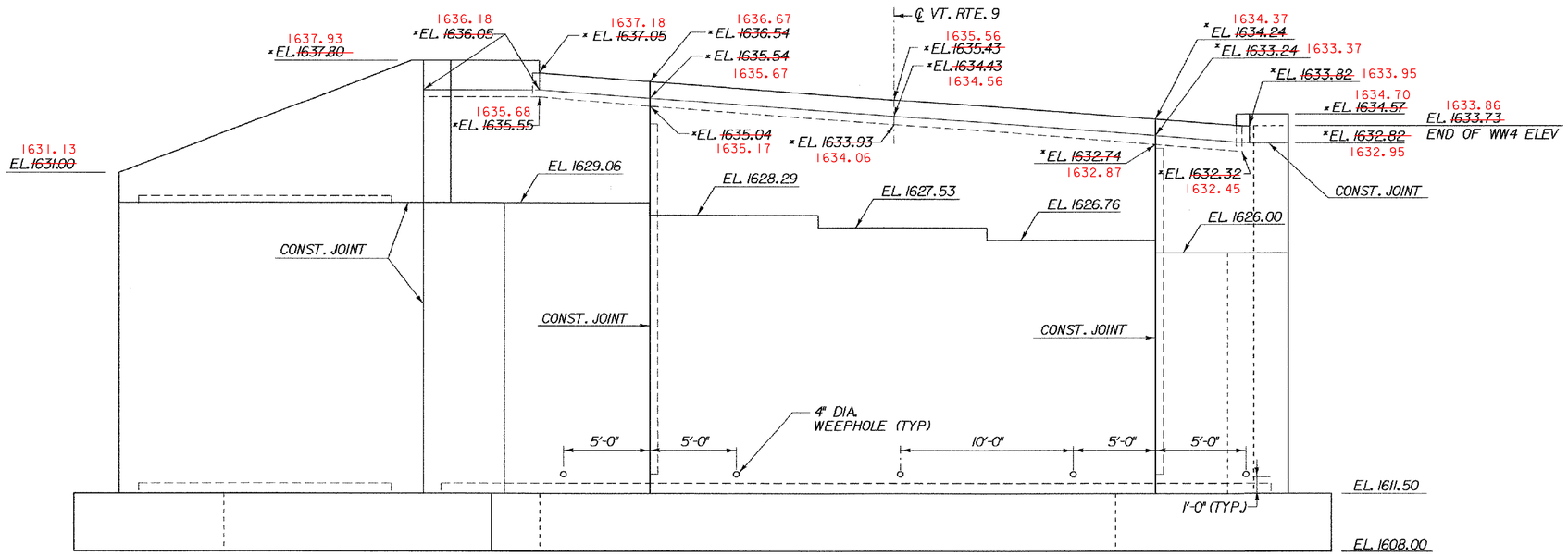

ABUTMENT 2 ELEVATION - BR 25A

SCALE 1/4" = 1'-0

1 0 2 4 6

* ELEVATIONS ARE APPROXIMATE, USED FOR ESTIMATING PURPOSES ONLY. ALL TOP OF BACKWALL ELEVATIONS WILL BE DETERMINED AFTER STRUCTURAL STEEL IS SET.

SHEET NAME: ABUTMENT 2 REDESIGN ELEVATION	
PROJECT NAME: SEARSBURG	HIGHWAY NO.: ROUTE 9
PROJECT NUMBER: NH F 010-1(18)	BRIDGE NO.: 25A
	OVER: THE DEERFIELD RIVER
FILE NAME: /str4/78d096/25 abut2.dgn	PLOT DATE: 14-FEB-2003
PROJECT MANAGER: R.WHITCOMB	DRAWN BY: J.GILMORE
DESIGNED BY: CH&A LLP	IPARM NAME: br328
BRIDGE SHEET NUMBER: BR328	SHEET 192 OF 435

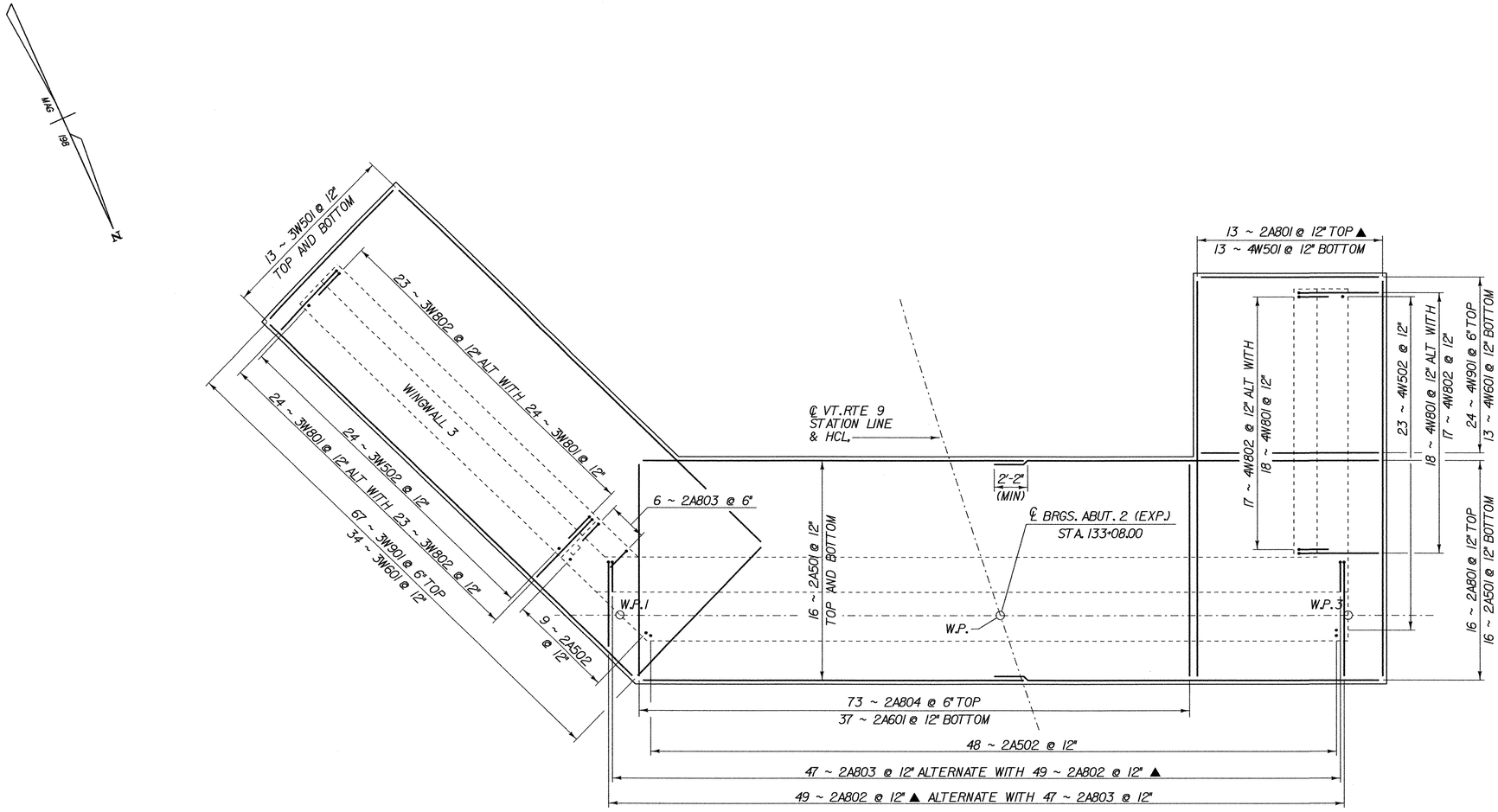

ABUTMENT 2 FOOTING REINFORCING PLAN - BR 25A

SCALE 1/4" = 1'-0

0 2 4 6

NOTE:

NF = NEAR FACE
FF = FAR FACE
EF = EACH FACE
▲ = CUT TO FIT IN FIELD
3" CLR. UNLESS OTHERWISE SPECIFIED ON THE PLANS.

SHEET NAME:	ABUTMENT 2 FOOTING REINFORCING		
PROJECT NAME:	SEARSBURG	HIGHWAY NO.:	ROUTE 9
PROJECT NUMBER:	NH F 010-1(18)	BRIDGE NO.:	25A
		OVER:	THE DEERFIELD RIVER
FILE NAME:	/str4/78d096/25a ab2dtshl.dgn	PLOT DATE:	19-FEB-2003
PROJECT MANAGER:	R.WHITCOMB	DRAWN BY:	J.GILMORE
DESIGNED BY:	CH&A LLP	IPARM NAME:	br329
BRIDGE SHEET NUMBER:	BR329	SHEET	193 OF 435

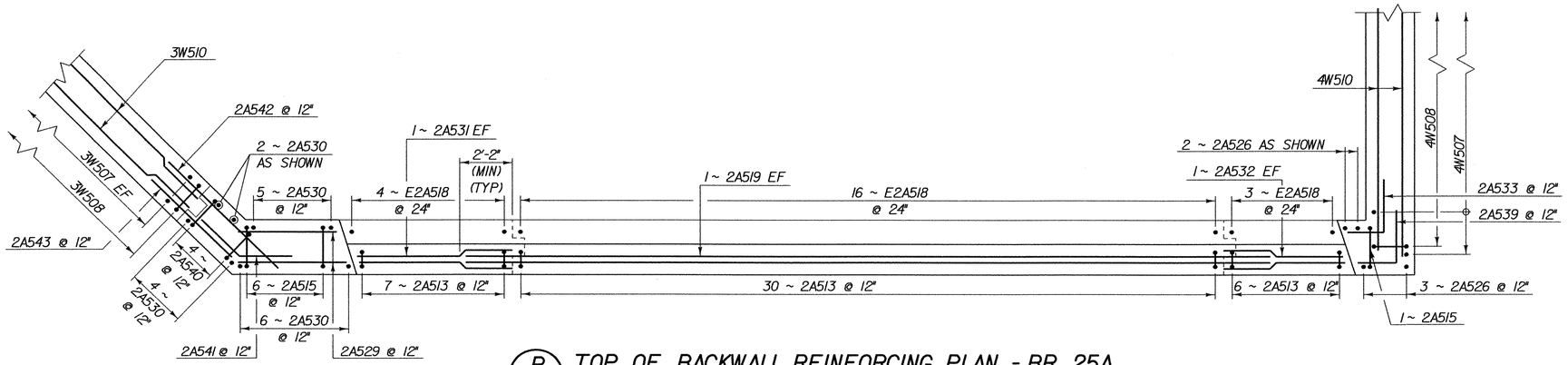

B BR331 TOP OF BACKWALL REINFORCING PLAN - BR 25A

SCALE 3/8" = 1'-0

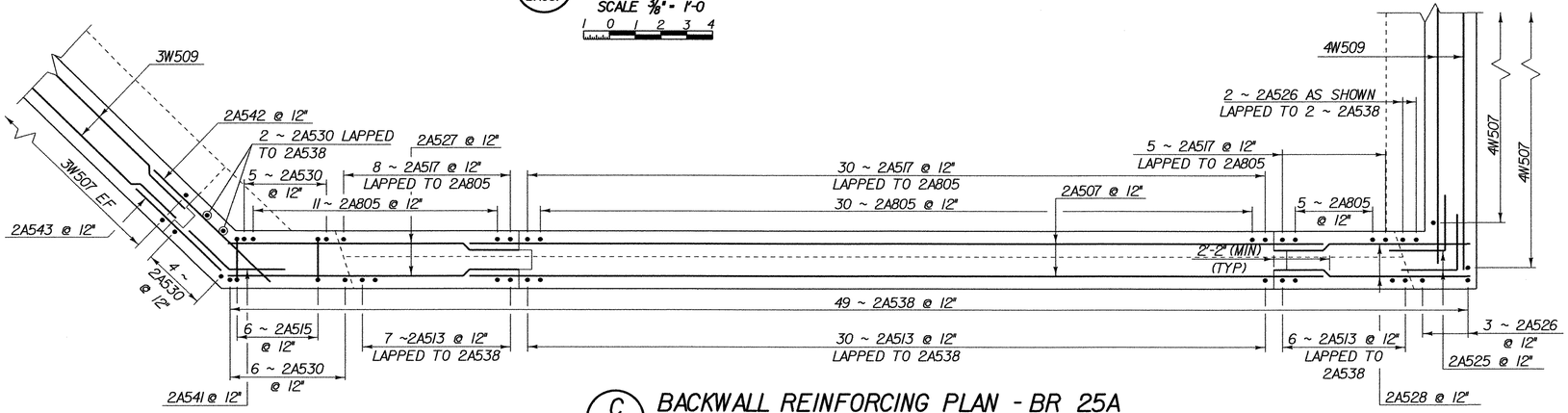

C BR331 BACKWALL REINFORCING PLAN - BR 25A

SCALE 3/8" = 1'-0

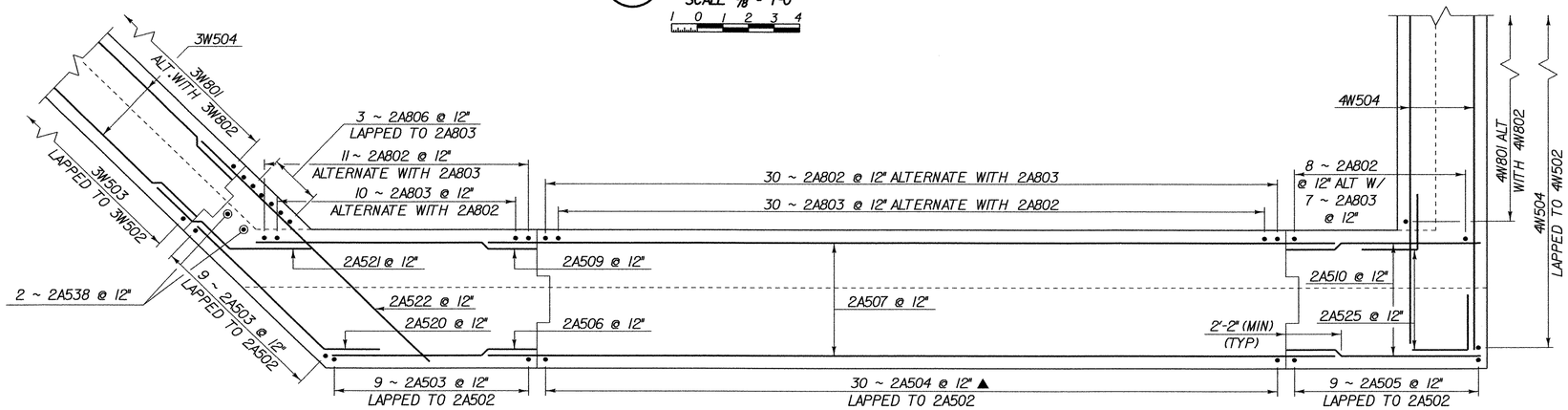

D BR331 STEM REINFORCING PLAN - BR 25A

SCALE 3/8" = 1'-0

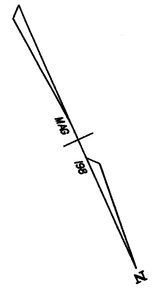

NOTE:

NF = NEAR FACE
FF = FAR FACE
EF = EACH FACE
▲ = CUT TO FIT IN FIELD
3" CLR. UNLESS OTHERWISE SPECIFIED ON THE PLANS.

SHEET NAME:	ABUTMENT 2 REINFORCING		
PROJECT NAME:	SEARSBURG	HIGHWAY NO.:	ROUTE 9
PROJECT NUMBER:	NH F 010-1(18)	BRIDGE NO.:	25A
		OVER:	THE DEERFIELD RIVER
FILE NAME:	/str4/78d096/25 abut2.dgn	PLOT DATE:	19-FEB-2003
PROJECT MANAGER:	R.WHITCOMB	DRAWN BY:	J.GILMORE
DESIGNED BY:	CH&A LLP	IPARM NAME:	br330
BRIDGE SHEET NUMBER:	BR330	SHEET	194 OF 435

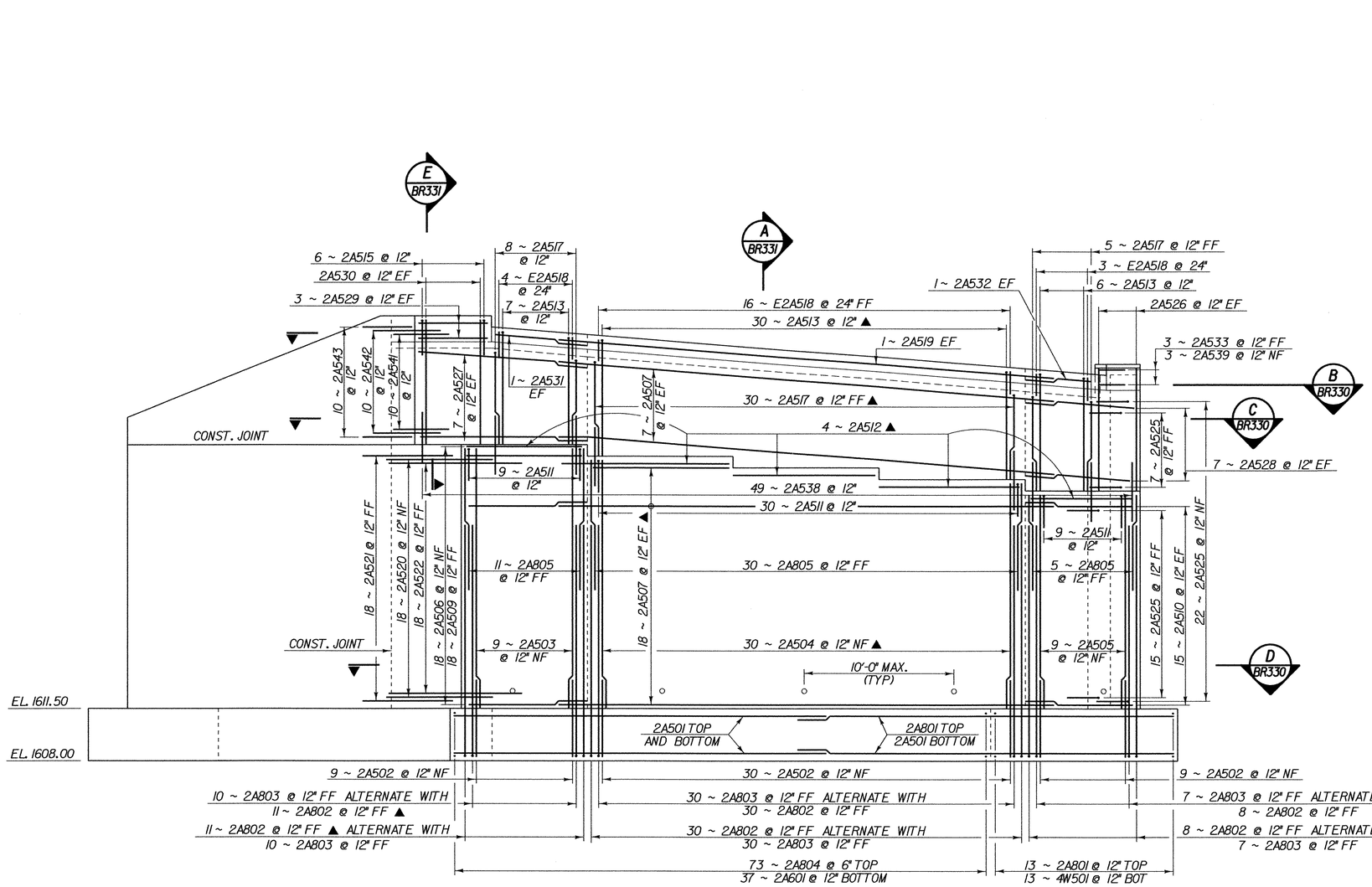

ABUTMENT 2 REINFORCING ELEVATION - BR 25A

SCALE 1/4" = 1'-0

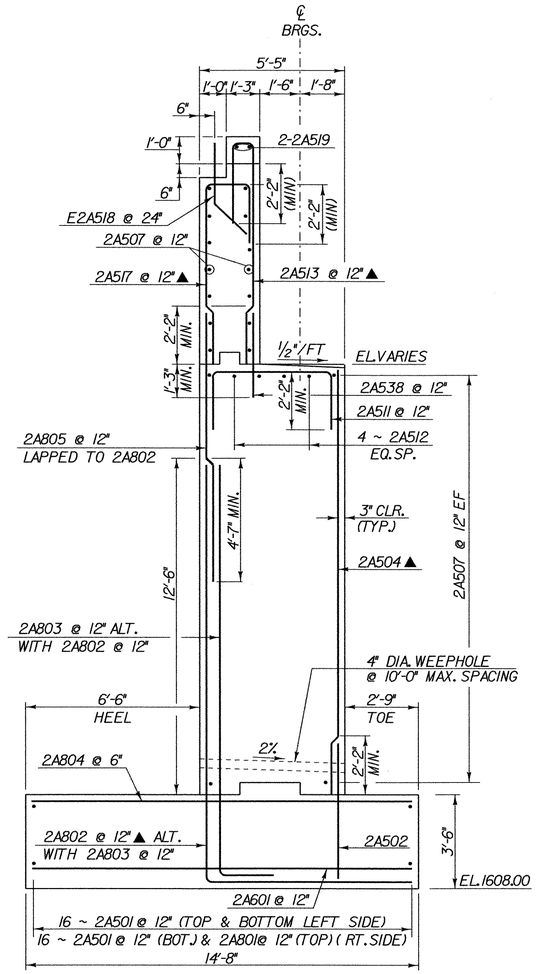

A BR331 ABUTMENT 2 SECTION - BR 25A

SCALE 3/8" = 1'-0

NOTES:

1. FOR BEARING DETAIL SEE BRIDGE DRAWING BR5 AND BR7.
2. FOR CONSTRUCTION JOINT DETAIL, SEE BRIDGE DRAWING BR15.

SHEET NAME:	ABUTMENT 2 REINFORCING ELEV		
PROJECT NAME:	SEARSBURG	HIGHWAY NO.:	ROUTE 9
PROJECT NUMBER:	NH F 010-1(18)	BRIDGE NO.:	25A
		OVER:	THE DEERFIELD RIVER
FILE NAME:	/str4/78d096/25a abt2reinf.dgn	PLOT DATE:	19-FEB-2003
PROJECT MANAGER:	R.WHITCOMB	DRAWN BY:	J.GILMORE
DESIGNED BY:	CH&A LLP	IPARM NAME:	br331
BRIDGE SHEET NUMBER:	BR331	SHEET	195 OF 435

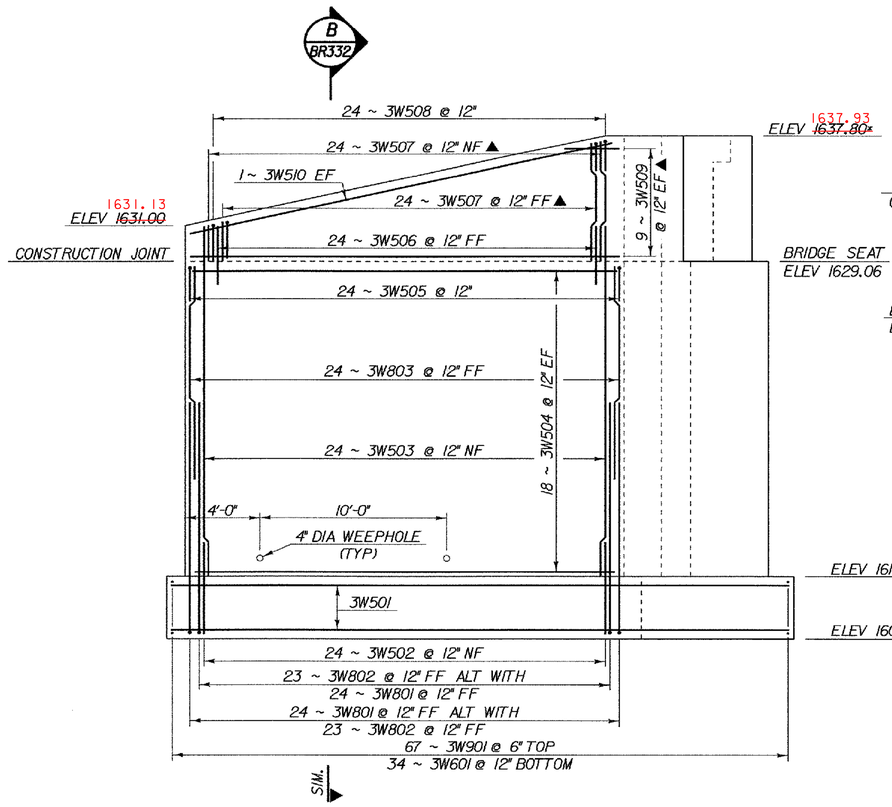

WINGWALL 3

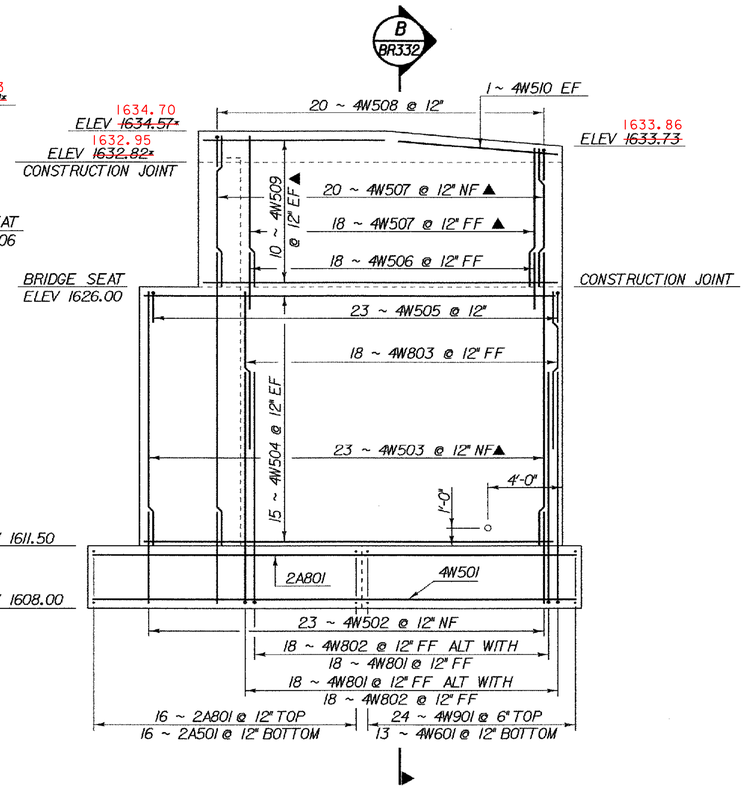

WINGWALL 4

ABUTMENT 2 WINGWALL REINFORCING ELEVATIONS - BR 25A

SCALE 1/4" = 1'-0

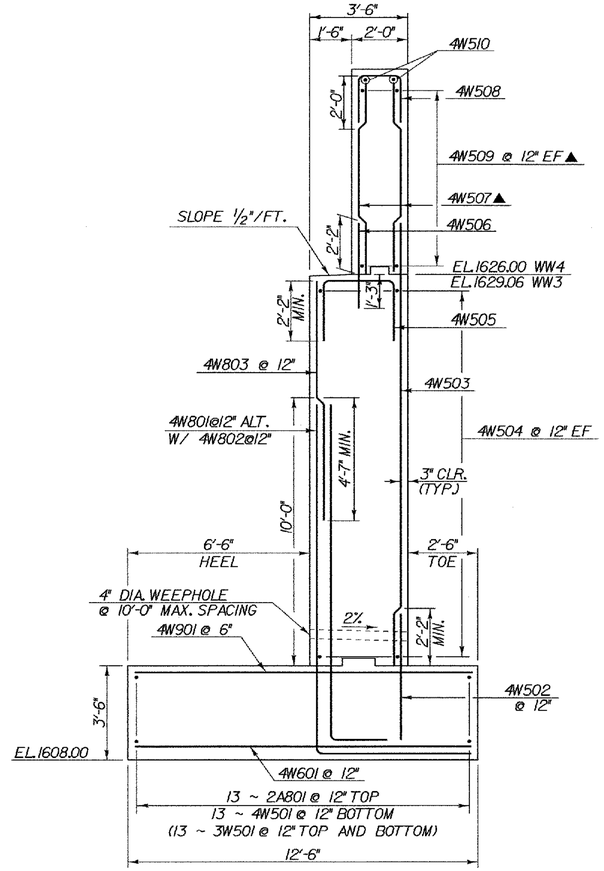

B BR328 TYPICAL WINGWALL SECTION - BR 25A

(WW 4 SHOWN, WW 3 SIMILAR)

SCALE 3/8" = 1'-0

NOTE:

NF = NEAR FACE
FF = FAR FACE
EF = EACH FACE
▲ = CUT TO FIT IN FIELD
3" CLR. UNLESS OTHERWISE SPECIFIED ON THE PLANS.

* ELEVATIONS ARE APPROXIMATE, USED FOR ESTIMATING PURPOSES ONLY. ALL TOP OF BACKWALL ELEVATIONS WILL BE DETERMINED AFTER STRUCTURAL STEEL IS SET.

SHEET NAME:	ABUTMENT 2 WINGWALL REINFORCING		
PROJECT NAME:	SEARSBURG	HIGHWAY NO.:	ROUTE 9
PROJECT NUMBER:	NH F 010-1(18)	BRIDGE NO.:	25A
		OVER:	THE DEERFIELD RIVER
FILE NAME:	/str4/T8d096/25a ab2dtsh3.dgn	PLOT DATE:	14-FEB-2003
PROJECT MANAGER:	R.WHITCOMB	DRAWN BY:	J.GILMORE
DESIGNED BY:	CH&A LLP	IPARM NAME:	br332
BRIDGE SHEET NUMBER:	BR332	SHEET	196 OF 435

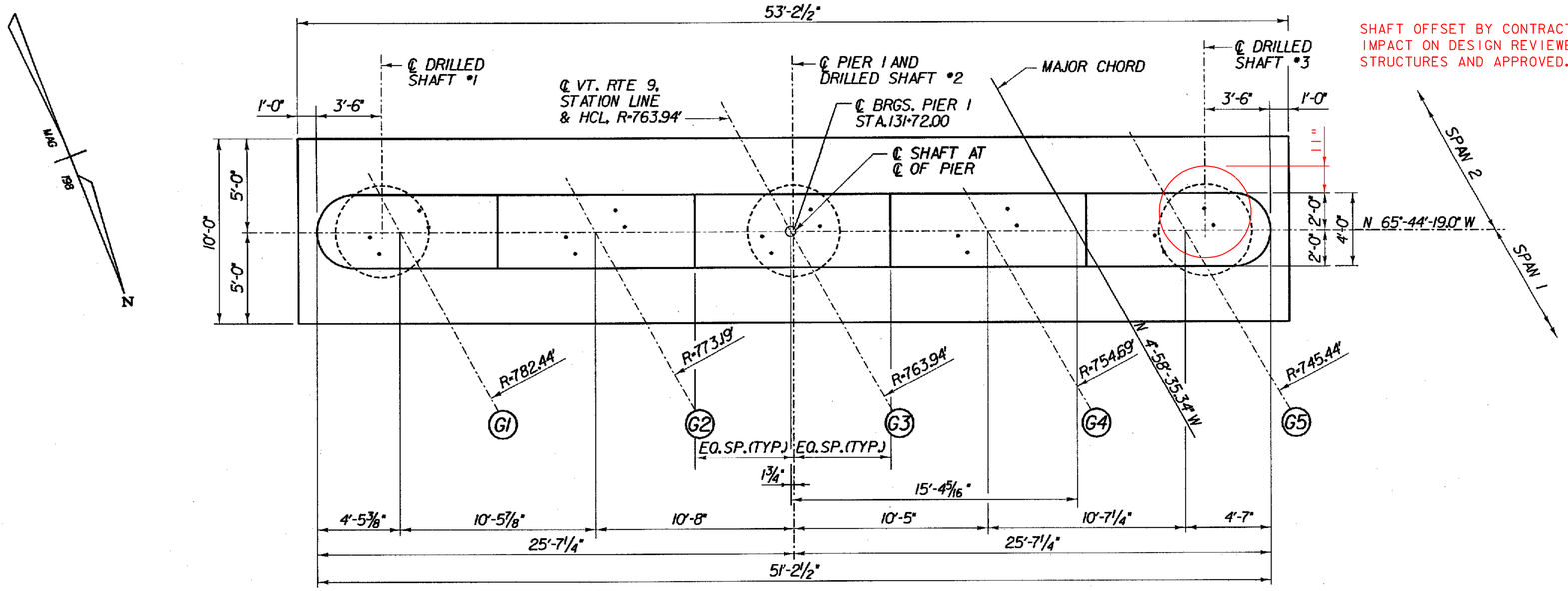

SHAFT OFFSET BY CONTRACTOR. IMPACT ON DESIGN REVIEWED BY STRUCTURES AND APPROVED.

PIER 1 PLAN - BR 25A

SCALE ¼" = 1'-0

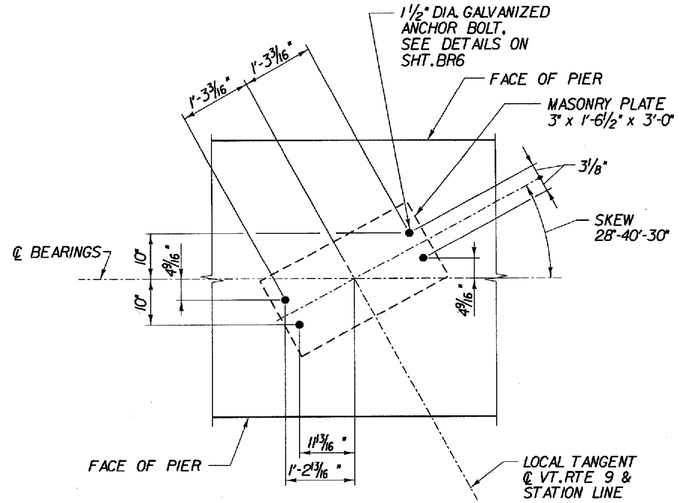

PIER 1 ANCHOR BOLT LAYOUT PLAN

SCALE ¾" = 1'-0

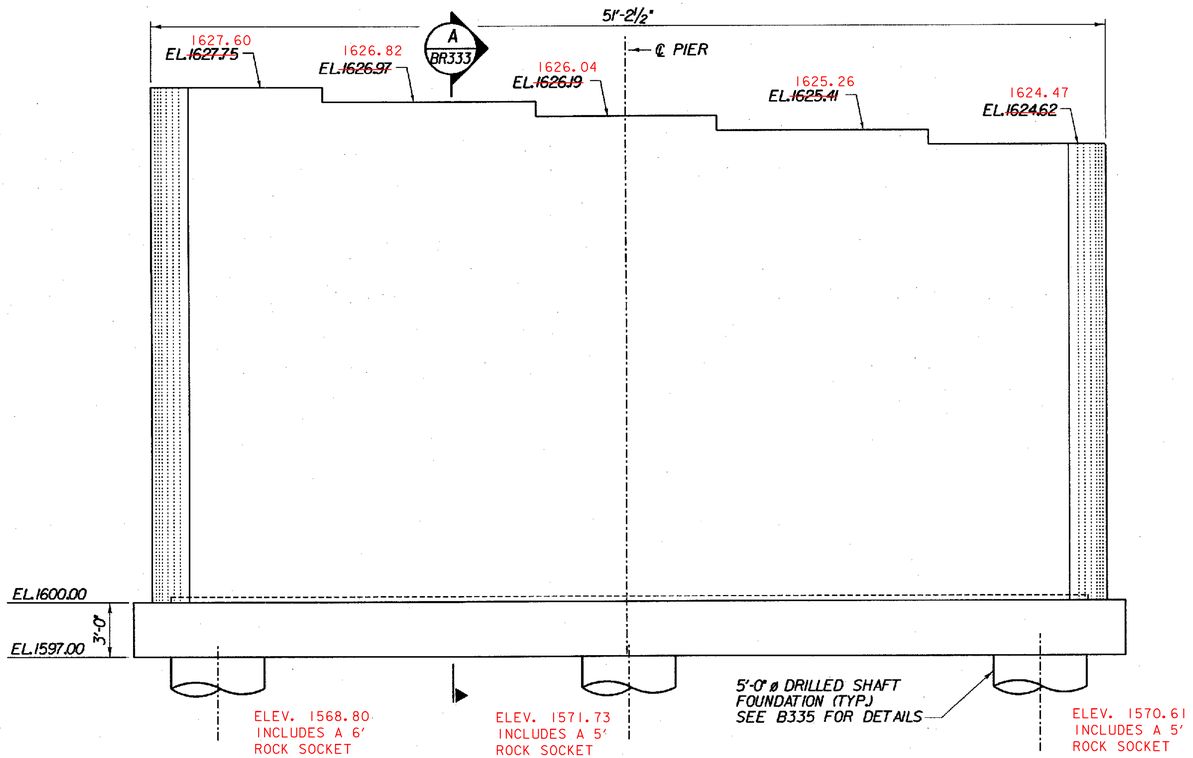

PIER 1 ELEVATION - BR 25A

SCALE ¼" = 1'-0

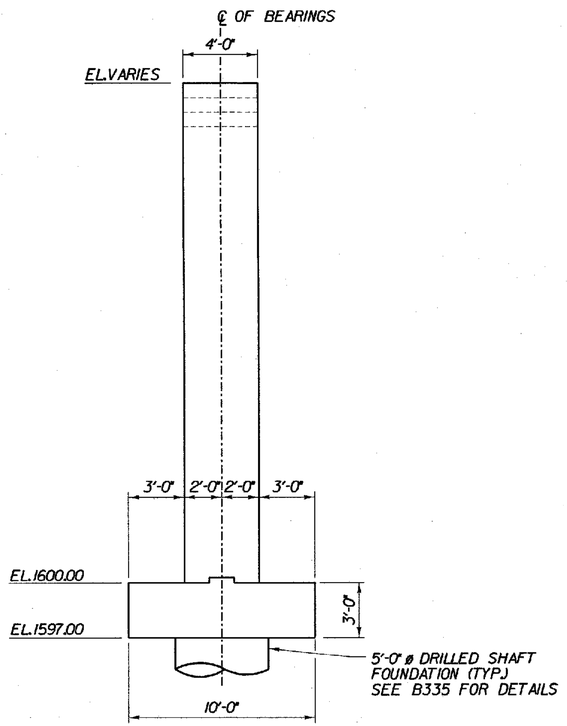

A BR333 PIER 1 SECTION

SCALE ¼" = 1'-0

NOTES:

1. ANCHOR BOLTS SHALL CLEAR ALL REINFORCING STEEL IN THE PIER CAP.

CLOUGH, HARBOUR & ASSOCIATES LLP
ENGINEERS, SURVEYORS, PLANNERS & LANDSCAPE ARCHITECTS
WINNERS CIRCLE ALBANY, NEW YORK, 12205

STATE OF VERMONT
AGENCY OF TRANSPORTATION

Town Of	SEARSBURG	Bridge No. 25A	
		Log Sta.	
Highway No.	VT. RTE. 9	Surv. Sta.	
VT. RTE. 9 OVER DEERFIELD RIVER			
PIER 1 PLAN & ELEVATION - BR 25A			
Designed By D. VIENI		Drawn by K. DETRICK	
Checked By M. OLSTAD	Date 2/2002	Bridge Design Supervisor M. OLSTAD	Date 2/2002
PROJECT SEARSBURG - WILMINGTON		PROJECT NO. NHF 010-K(18)	
I.G.C. Info.			
Bridge Sheet No. BR333		Sheet 197 OF 435	

FILE NAME =BR\9735\PLANS\BR0025A\25a_pier_1.DGN
DATE/TIME =02/20/02
USER =2225

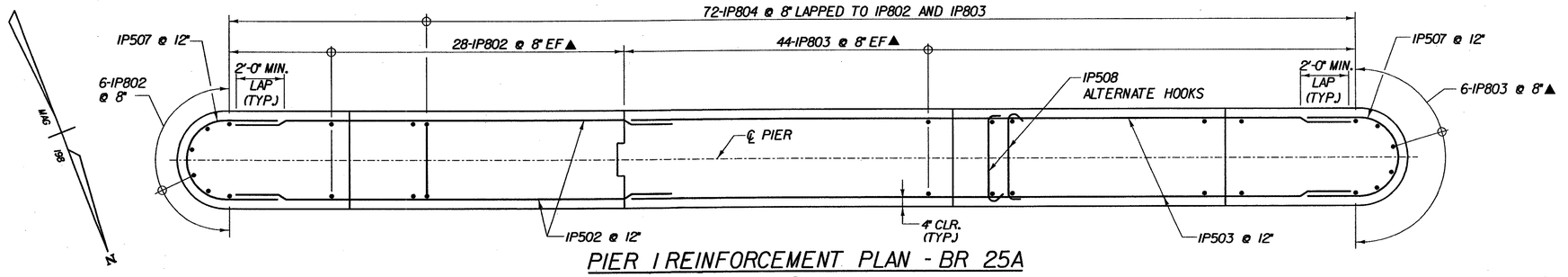

PIER I REINFORCEMENT PLAN - BR 25A

SCALE 3/8" = 1'-0

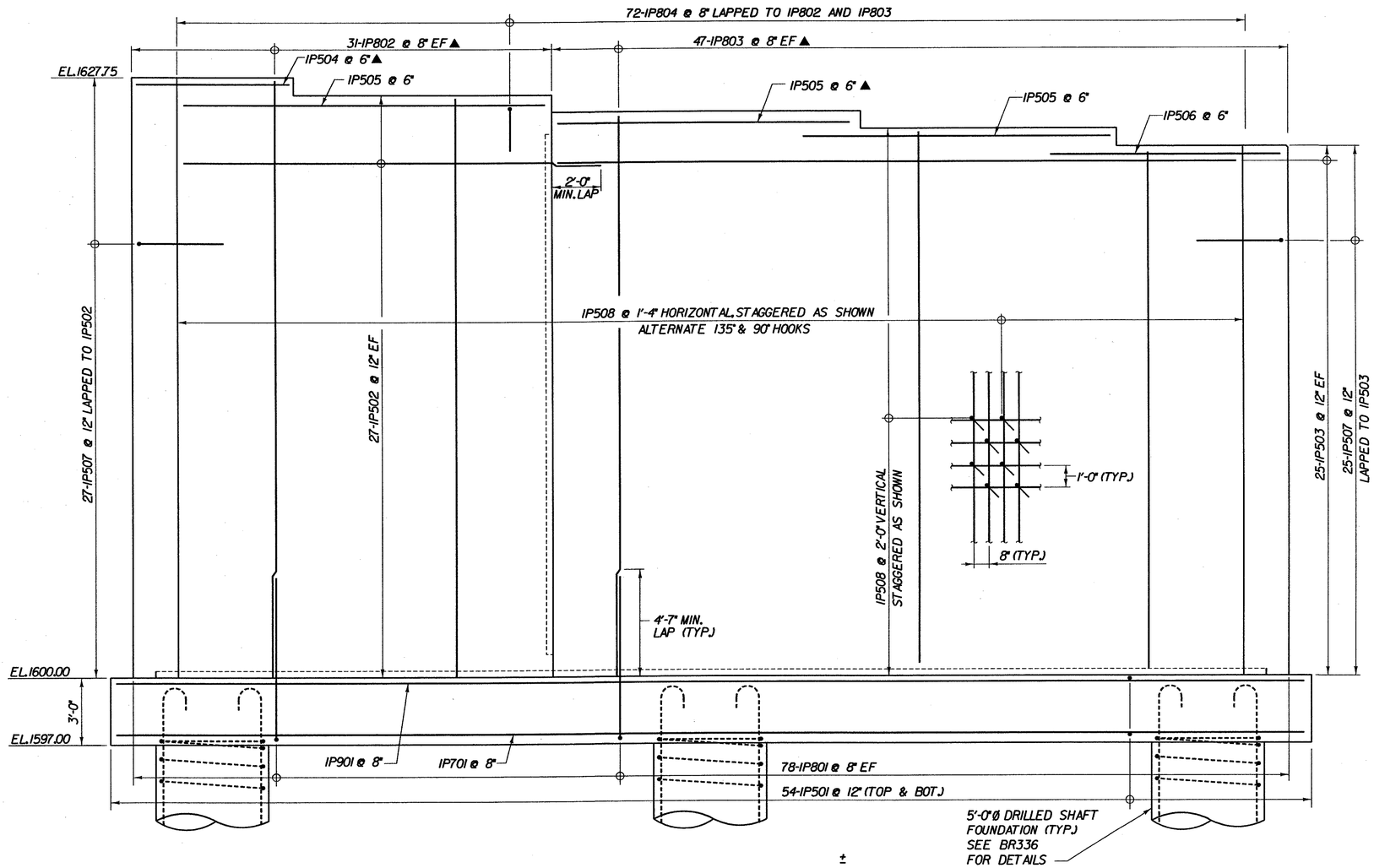

PIER I REINFORCEMENT ELEVATION - BR 25A

SCALE 3/8" = 1'-0

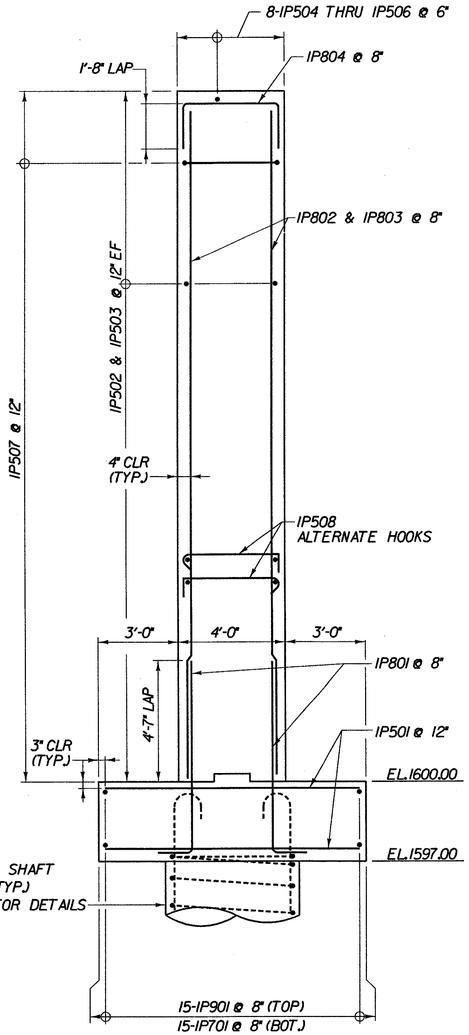

PIER I REINFORCEMENT SECTION - BR 25A

SCALE 3/8" = 1'-0

NOTE:
DRILLED SHAFT REINFORCING NOT SHOWN FOR CLARITY. SEE BR336 FOR DETAILS

KEY:
NF = NEAR FACE
FF = FAR FACE
EF = EACH FACE
▲ = CUT TO FIT IN FIELD

3" CLR. FOR FOOTINGS.
4" CLR. FOR PIER STEM & DRILLED SHAFTS UNLESS OTHERWISE SPECIFIED ON THE PLANS.

STATE OF VERMONT
AGENCY OF TRANSPORTATION

Town Of	SEARSBURG	Bridge No.	25A
Highway No.	VT. RTE. 9	Log Sta.	
		Surv. Sta.	

VT. RTE. 9 OVER DEERFIELD RIVER

PIER I REINFORCING - BR 25A

Designed By	D. VIENI	Drawn by	K. DETRICK
Checked By	M. OLSTAD	Date	12/2001
Bridge Design Supervisor	M. OLSTAD	Date	12/2001
PROJECT	SEARSBURG - WILMINGTON	PROJECT NO.	NHF 010-1(18)
L.G.C. Info.			
Bridge Sheet No.	BR334	Sheet	198 OF 435

CLOUGH, HARBOUR & ASSOCIATES LLP
ENGINEERS, SURVEYORS, PLANNERS & LANDSCAPE ARCHITECTS
3 WINNERS CIRCLE ALBANY, NEW YORK, 12205

FILE NAME =u:\19755\msw\15\BRDG25A\25a_pierreinf.plt
DATE/TIME =12/13/2001
USER =1664

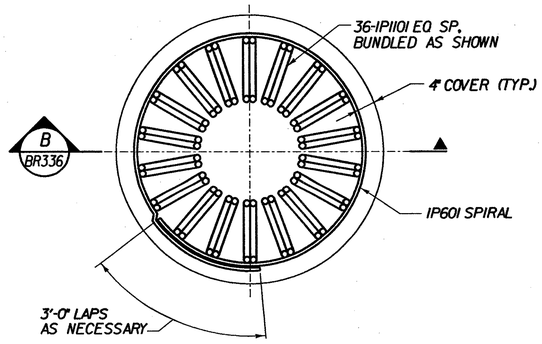

A BR336 **5'-0" Ø DRILLED SHAFT SECTION**

SCALE 3/4" = 1'-0

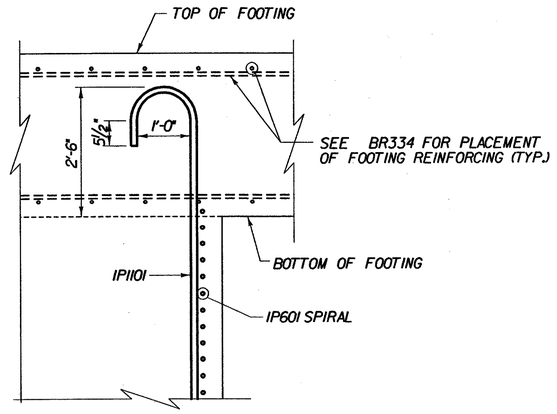

B BR336 **5'-0" Ø DRILLED SHAFT SECTION**

SCALE 3/4" = 1'-0

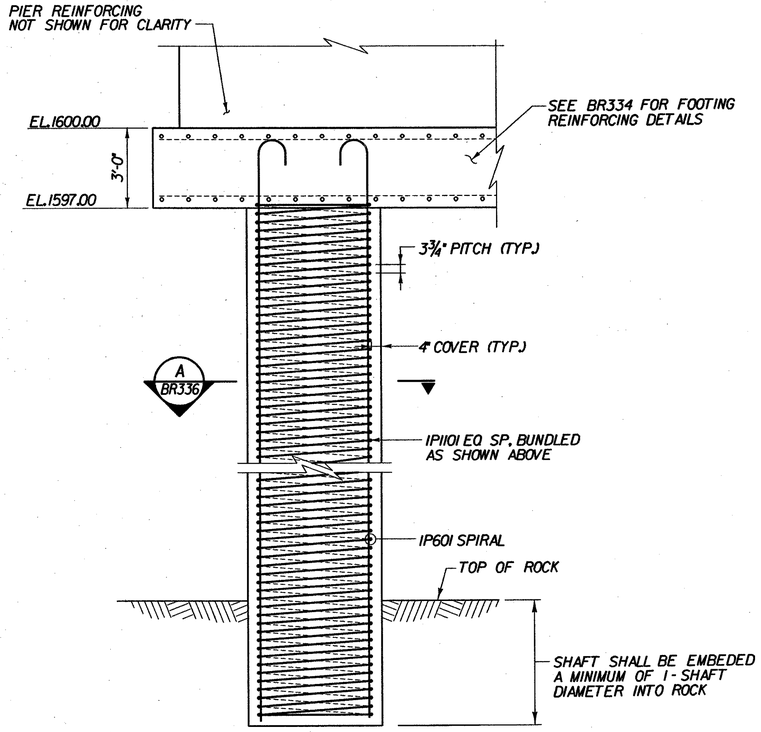

TYPICAL 5'-0" Ø DRILLED SHAFT - PIER 1

SCALE 3/8" = 1'-0

NOTES:

1. FOR DRILLED SHAFT NOTES, SEE BRIDGE SHEET BR3.

KEY:

NF - NEAR FACE
FF - FAR FACE
EF - EACH FACE
▲ - CUT TO FIT IN FIELD

3" CLR. FOR FOOTINGS.
4" CLR. FOR PIER STEM & DRILLED SHAFTS UNLESS OTHERWISE SPECIFIED ON THE PLANS.

CLOUGH, HARBOUR & ASSOCIATES LLP
ENGINEERS, SURVEYORS, PLANNERS & LANDSCAPE ARCHITECTS
11 WINNERS CIRCLE ALBANY, NEW YORK, 12205

STATE OF VERMONT
AGENCY OF TRANSPORTATION

Town Of SEARSBURG	Bridge No. 25A
Highway No. VT. RTE. 9	Log Sta. / Surv. Sta.
VT. RTE. 9 OVER DEERFIELD RIVER	
PIER 1 DRILLED SHAFT - BR 25A	
Designed By D. VIENI	Drawn by K. DETRICK / WmWEATHERBY
Checked By M. OLSTAD Date 12/2001	Bridge Design Supervisor M. OLSTAD Date 12/2001
PROJECT SEARSBURG - WILMINGTON	PROJECT NO. NHF 010-1(18)
L.G.C. Info.	
Bridge Sheet No. BR336	Sheet 199 OF 435

FILE NAME = u:\9755\MSTN\15\BR00254\25A_dr1shaft.PLT
DATE/TIME = 12/12/01
USER = 2225

ITEM	NO. PIECES	SIZE	LENGTH	MARK	TYPE	A	B	C	D	E	F	G	H	J	K	O	R
1	ABUTMENT 1																
2	60	5	29'-6	1A501 ▲	STR.												
3	72	5	4'-2	1A502△	STR.												
4	18	5	17'-11	1A503	STR.												
5	25	5	19'-7	1A504 ▲	STR.												
6	30	5	21'-2	1A505 ▲	STR.												
7	19	5	8'-4	1A506	STR.												
8	42	5	28'-7	1A507	STR.												
9	22	5	20'-5	1A508	STR.												
10	19	5	10'-10	1A509	STR.												
11	22	5	21'-0	1A510	STR.												
12	57	5	9'-4	1A511	S10		2'-2	5'-0	2'-2								
13	20	5	14'-4	1A512 ▲	STR.												
14	54	5	11'-5	1A513 ▲	S10		2'-0	9	8'-8								
15	14	5	11'-3	1A514 ▲	STR.												
16	14	5	28'-7	1A515	STR.												
17	14	5	21'-8	1A516 ▲	STR.												
18	57	5	9'-7	1A517	S10		6'-7	1'-9	1'-3								
19	29	5	5'-2	E1A518	16			2'-5	2'-9				2'-0		2'-0		
20	6	5	28'-7	1A519 ▲	STR.												
21	27	5	5'-3	1A520	16			3'-1	2'-2				1'-7		1'-6		
22	19	5	~~9'-3~~	1A521	~~STR.~~	10'-6"	16	4'-0"	2'-6"				1'-7"		1'-6"		
23	19	5	6'-6	1A522	~~16~~		STR	~~0'-4~~	~~2'-2~~				~~1'-7~~		~~1'-6~~		
24	8	5	7'-1	1A523 ▲	STR.												
25	30	5	4'-4	1A524	16			2'-2	2'-2				0'-10		2'-0		
26	22	5	18'-10	1A525	14		2'-2	14'-6	2'-2				1'-1				
27	44	5	9'-1	1A526	STR.												
28	16	5	5'-8	1A527	STR.												
29	5	5	12'-1	1A528	S10		8'-5	1'-6	2'-2								
30	3	5	6'-9	1A529	16			5'-3	1'-6				1'-0		1'-0		
31	3	5	5'-6	1A530	STR.												
32	5	5	12'-3	1A531	S10		8'-4	1'-9	2'-2								
33	6	5	7'-1	1A532	16			5'-7	1'-6				1'-0		1'-0		
34	4	5	12'-0	1A533	S10		8'-4	1'-6	2'-2								
35	5	5	9'-5	1A534	STR.												
36	9	5	9'-7	1A535	STR.												
37	54	5	4'-5	1A536	STR.												
38																	
39	118	6	13'-9	1A601△	STR.												
40																	
41	116	8	13'-9	1A801	STR.												
42																	
43	125	9	12'-7	1A901	17		1'-7	11'-0									
44	14	9	21'-7	1A902 ▲	STR.												
45	25	9	22'-3	1A903 ▲	STR.												
46	26	9	23'-3	1A904 ▲	STR.												
47	WINGWALL 1																
48	24	5	19'-6	1W501 ▲	STR.												
49	24	5	4'-2	1W502△	STR.												
50	11	5	29'-9	1W503 ▲	STR.												
51	48	5	10'-9	1W504	STR.												
52	18	5	10'-9	1W506 ▲	STR.												
53	14	5	5'-11	1W507	S10.		2'-2	1'-7	2'-2								
54	2	5	12'-5	1W508	16			11'-5	1'-0								
55													9/8		7¾		
56	65	8	10'-6	1W801△	STR.												
57																	
58	31	9	12'-8	1W901	17		1'-7	11'-1									
59	16	9	29'-9	1W902 ▲	STR.												
60																	
61	WINGWALL 2																
62	24	5	33'-5	2W501 ▲	STR.												
63	52	5	4'-2	2W502△	STR.												
64	25	5	26'-4	2W503 ▲	STR.												
65	38	5	23'-7	2W504	STR.												
66	18	5	23'-7	2W506 ▲	STR.												
67	25	5	5'-7	2W507	S10.		2'-0	1'-7	2'-0								
68	2	5	23'-7	2W508	STR.												
69																	
70	104	8	10'-6	2W801△	STR.												
71																	
72	75	9	12'-8	2W901	17		1'-7	11'-1									
73	38	9	26'-4	2W902 ▲	STR.												
74																	
75																	
76																	
77	ABUTMENT 2			SEE REVISED SHEET													
78	72	5	25'-9	2A501 ▲	STR.												
79	64	5	4'-2	2A502△	STR.												
80	17	5	24'-2	2A503	STR.												
81	21	5	23'-5	2A504 ▲	STR.												
82	26	5	21'-11	2A505 ▲	STR.												
83	25	5	8'-0	2A506	STR.												
84	48	5	23'-10	2A507	STR.												
85	23	5	16'-4	2A508	STR.												
86	25	5	11'-0	2A509	STR.												
87	23	5	20'-0	2A510	STR.												
88	48	5	9'-0	2A511	S10		2'-0	5'-0	2'-0								
89	20	5	11'-9	2A512 ▲	STR.												
90	45	5	13'-5	2A513 ▲	S10		10'-8	0'-9	2'-0								
91	16	5	11'-0	2A514	STR.												
92	16	5	23'-10	2A515	STR.												
93	16	5	18'-1	2A516	STR.												
94	45	5	11'-8	2A517 ▲	S10		7'-11	1'-9	2'-0								
95	22	5	5'-2	E2A518▲	16			2'-5	2'-9				2'-0		2'-0		
96																	
97																	

ITEM	NO. PIECES	SIZE	LENGTH	MARK	TYPE	A	B	C	D	E	F	G	H	J	K	O	R
98	ABUTMENT 2 (CONT.)				SEE REVISED SHEET												
99	6	5	23'-10	2A519 ▲	STR.												
100	25	5	12'-1	2A520	14			7'-9	2'-2				1'-7				
101	25	5	8'-10	2A521	14		2'-6	6'-4									
102	25	5	12'-8	2A522	STR.								1'-7				
103	16	5	6'-10	2A523	STR.												
104	8	5	4'-4	2A524	16		2'-2	2'-2					0'-10				
105	22	5	11'-5	2A525	14			9'-3	2'-2				1'-1				
106	22	5	10'-1	2A526	STR.												
107	22	5	22'-3	2A527	14		1'-3	19'-9	1'-3								
108	14	5	6'-5	2A528	STR.												
109	7	5	4'-4	2A529	16			2'-2	2'-2				1'-0		1'-10½		
110	6	5	12'-3	2A530	S10		6'-4	1'-9	2'-2								
111	6	5	10'-1	2A531	14			5'-2	4'-11								
112	9	5	12'-4	2A532	S10		8'-5	1'-9	2'-2				1'-0				
113	6	5	9'-5	2A533	14			5'-6	3'-11								
114	3	5	12'-0	2A534	S10		8'-4	1'-6	2'-2								
115	4	5	11'-10	2A535	S10		8'-2	1'-6	2'-2								
116	9	5	9'-7	2A536	STR.												
117	9	5	9'-5	2A537	STR.												
118	45	5	3'-5	2A538	STR.												
119																	
120	102	6	16'-8	2A601△	STR.												
121																	
122	150	8	16'-8	2A801	STR.												
123																	
124	114	10	14'-3	2A1001	17			12'-5	1'-10								
125	12	10	26'-7	2A1002	STR.												
126	24	10	25'-10	2A1003▲	STR.												
127	19	10	24'-4	2A1004▲	STR.												
128																	
129																	
130	WINGWALL 3			SEE REVISED SHEET													
131	28	5	32'-6	3W501 ▲	STR.												
132	48	5	4'-2	3W502	STR.												
133	24	5	26'-7	3W503	STR.												
134	54	5	23'-0	3W504	STR.												
135	24	5	7'-5	3W505	S10		2'-2	3'-1	2'-2								
136	26	5	3'-5	3W506△	STR.												
137	48	5	8'-4	3W507 ▲	STR.												
138	24	5	5'-10	3W508	S10		2'-2	1'-6	2'-2								
139	16	5	23'-0	3W509 ▲	STR.												
140	2	5	23'-0	3W510	14			22'-3	9				0'-2½				
141																	
142	69	6	13'-0	3W601△	STR.												
143																	
144	67	7	13'-0	3W702	STR.												
145																	
146	74	8	14'-7	3W801	17			12'-9	1'-10								
147	37	8	24'-2	3W802	STR.												
148																	
149																	
150	WINGWALL 4			SEE REVISED SHEET													
151	28	5	22'-0	4W501 ▲	STR.												
152	28	5	4'-2	4W502	STR.												
153	14	5	23'-7	4W503	STR.												
154	48	5	12'-9	4W504	STR.												
155	14	5	7'-5	4W505	S10		2'-2	3'-1	2'-2								
156	16	5	3'-5	4W506△	STR.												
157	28	5	8'-2	4W507 ▲	STR.												
158	14	5	5'-10	4W508	S10		2'-2	1'-6	2'-2				4'-4				
159	16	5	12'-9	4W509	STR.												
160	2	5	14'-2	4W510	14			13'-5	9								
161																	
162	49	6	13'-0	4W601△	STR.												
163																	
164	47	7	13'-0	4W701	STR.												
165																	
166	42	8	14'-7	4W801	17			12'-9	1'-10								
167	21	8	21'-2	4W802	STR.												
168																	
169																	
170	PIER 1																
171	108	5	9'-6	1P501	STR.												
172	54	5	20'-4	1P502	STR.												
173	50	5	28'-11	1P503	STR.												
174	9	5	9'-0	1P504△	STR.												
175	24	5	18'-0	1P505	STR.												
176	8	5	11'-7	1P506	STR.												
177	52	5	9'-3	1P507	10	2'-0	5'-3	2'-0								3'-4	1'-8
178	1053	5	4'-4½	1P508	ALT HOOK	0'-5½	3'-5					0'-6					
179																	
180	72	6	60'-0	1P601	SPIRAL												
181																	
182	17	7	52'-8	1P701△	STR.												
183																	
184	156	8	8'-8	1P801	2	1'-4	7'-4										
185	62	8	27'-5	1P802	STR.												
186	94	8	25'-10	1P803	STR.												
187	72	8	6'-7	1P804	2	1'-8	3'-3					1'-8					
188																	
189	15	9	52'-8	1P901	STR.												
190																	
191	108	11	34'-1	1P1101	1	1'-7	32'-6										
192																	
193																	
194																	

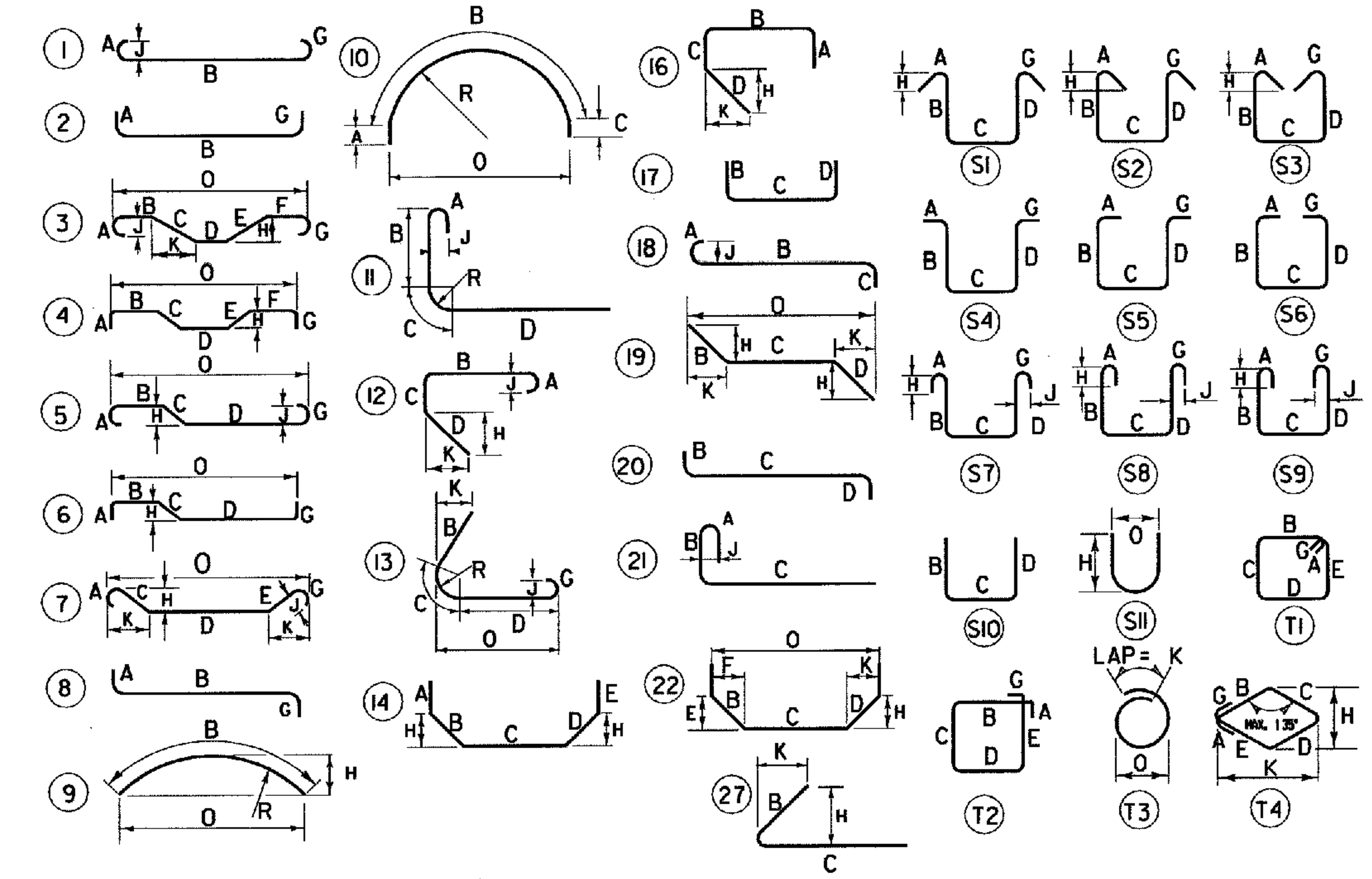

NOTES:

1. UNLESS OTHERWISE DESIGNATED, ALL BAR REINFORCEMENT FOR CONCRETE IN SIZES UP TO AND INCLUDING NO. 18 SHALL CONFORM TO THE REQUIREMENTS OF THE SPECIFICATIONS FOR DEFORMED BILLET-STEEL BARS FOR CONCRETE REINFORCEMENT, AASHTO M 31 (ASTM A 615-S1). ALL BARS SHALL BE GRADE 60, UNLESS OTHERWISE DESIGNATED.
2. FOR TYPICAL BENDING DETAILS, RECOMMENDED PIN DIAMETER D OF BENDS AND HOOKS, AND OTHER STANDARD PRACTICE, SEE CURRENT CONCRETE REINFORCING STEEL INSTITUTE MANUAL OF STANDARD PRACTICE.
3. BARS WHICH REQUIRE MORE ACCURATE BENDING THAN STANDARD PRACTICES SHOULD HAVE LIMITS INDICATED.
4. ALL DIMENSIONS ARE OUT TO OUT OF BAR EXCEPT A AND G ON STANDARD 180 DEGREE AND 135 DEGREE HOOKS.
5. J DIMENSION ON 180 DEGREE HOOKS TO BE SHOWN ONLY WHERE NECESSARY TO RESTRICT HOOK SIZE. OTHERWISE, STANDARD HOOKS ARE TO BE USED.
6. H DIMENSION ON STIRRUPS TO BE SHOWN ONLY WHEN NECESSARY TO MAINTAIN CLEARANCES.
7. WHERE SLOPE DIFFERS FROM 45 DEGREES, DIMENSIONS H AND K MUST BE SHOWN.
8. ▲ DENOTES BARS TO BE CUT IN FIELD.
9. ♦ DENOTES BARS TO BE BENT IN FIELD.
10. ✳ DENOTES ONE EXTRA BAR ADDED FOR TESTING PURPOSES.
11. △ DENOTES TWO EXTRA BARS ADDED FOR TESTING PURPOSES.
12. E IN PREFIX DENOTES EPOXY COATED REINFORCING STEEL.

ASTM STANDARD REINFORCING BARS

BAR SIZE DESIGNATION	WEIGHT POUNDS PER FOOT	NOMINAL DIMENSIONS ROUND SECTION		
		DIAMETER INCHES	CROSS SECTIONAL AREA SQ. INCHES	PERIMETER INCHES
#3	.376	.375	.11	1.178
#4	.668	.500	.20	1.571
#5	1.043	.625	.31	1.963
#6	1.502	.750	.44	2.356
#7	2.044	.875	.60	2.749
#8	2.670	1.000	.79	3.142
#9	3.400	1.128	1.00	3.544
#10	4.303	1.270	1.27	3.990
#11	5.313	1.410	1.56	4.430
#14	7.65	1.693	2.25	5.32
#18	13.60	2.257	4.00	7.09

CLOUGH, HARBOUR & ASSOCIATES LLP
ENGINEERS, SURVEYORS, PLANNERS & LANDSCAPE ARCHITECTS
III WINNERS CIRCLE ALBANY, NEW YORK, 12205

STATE OF VERMONT
AGENCY OF TRANSPORTATION

Town Of SEARSBURG	Bridge No. 25A
	Log Sta.
Highway No. VT. RTE. 9	Surv. Sta.
VT. RTE. 9 OVER DEERFIELD RIVER	
RIENFORCING STEEL SCHEDULE 1 - BR 25A	
Designed By D. VIENI	Drawn by K. DETRICK/Wm WEATHERBY
Checked By M. OLSTAD Date 2/2002	Bridge Design Supervisor M. OLSTAD Date 2/2002
PROJECT SEARSBURG - WILMINGTON	PROJECT NO. NHF 010-1(18)
I.G.C. Info.	
Bridge Sheet No. BR338	Sheet 200 OF 435

FILE NAME =u:\9755\MSTN\15\BRDG25A\25a_barlist.DGN
DATE/TIME =02/20/02
USER =2225

STATE OF VERMONT
AGENCY OF TRANSPORTATION

REINFORCING STEEL SCHEDULE

	EACH	SIZE	LENGTH	MARK	TYPE	A	B	C	D	E	F	G	H	J	K	R	O
	ABUTMENT #2																
	48	5	26'- 3"	2A501	STR												
)	59	5	5'- 2"	2A502	STR												
	18	5	17'- 3"	2A503	STR												
▲	30	5	16'- 6"	2A504	STR												
	9	5	14'- 3"	2A505	STR												
	18	5	8'- 1"	2A506	STR												
▲	50	5	33'- 10"	2A507	STR												
	NOT USED			2A508													
	18	5	13'- 0"	2A509	STR												
	30	5	7'- 7"	2A510	STR												
	48	5	9'- 3"	2A511	17		2'- 2"	4'- 11"	2'- 2"								
▲	20	5	9'- 9"	2A512	STR												
▲	43	5	11'- 7"	2A513	S10		7'- 10"	0'- 9"	3'- 0"								
	NOT USED			2A514													
	7	5	6'- 1"	2A515	17		2'- 2"	1'- 9"	2'- 2"								
	NOT USED			2A516													
▲	43	5	10'- 9"	2A517	17		6'- 10"	1'- 9"	2'- 2"								
	23	5	5'- 2"	E2A518	16	----	---	2'- 5"	2'- 9"				2'- 0"		2'- 0"		
	2	5	33'- 10"	2A519	STR												
	18	5	9'- 6"	2A520	19		---	7'- 4"	2'- 2"				1'- 6"		1'- 7"		
	18	5	5'- 8"	2A521	19		---	2'- 10"	2'- 10"				1'- 11"		2'- 0"		
	18	5	12'- 11"	2A522	STR												
	NOT USED			2A523													
	NOT USED			2A524													
	44	5	5'- 0"	2A525	17		---	2'- 6"	2'- 6"								
	5	5	8'- 4"	2A526	STR												
	14	5	11'- 0"	2A527	STR												
	14	5	7'- 7"	2A528	STR												
	6	5	4'- 10"	2A529	STR												
	17	5	8'- 6"	2A530	STR												
	2	5	6'- 3"	2A531	STR												
	2	5	4'- 9"	2A532	STR												
	3	5	3'- 3"	2A533	17			1'- 1"	2'- 2"								
	NOT USED			2A534													
	NOT USED			2A535													
	NOT USED			2A536													
	NOT USED			2A537													
	53	5	3'- 5"	2A538	STR												
	3	5	4'- 2"	2A539	17			2'- 0"	2'- 2"								
	4	5	5'- 6"	2A540	17		2'- 0"	1'- 6"	2'- 0"								
	10	5	4'- 4"	2A541	19			2'- 2"	2'- 2"				1'- 6"		1'- 7"		
	10	5	6'- 10"	2A542	STR												
	10	5	5'- 4"	2A543	STR												
	37	6	14'- 2"	2A601	STR												
▲	29	8	26'- 3"	2A801	STR												
▲	49	8	23'- 5"	2A802	2	----	7'- 8"	15'- 9"					---				
	53	8	17'- 9"	2A803	2	----	2'- 0"	15'- 9"					---				
	73	8	14'- 2"	2A804	STR												
	46	8	12'- 0"	2A805	STR												
)	5	8	9'- 5"	2A806	STR												
	WINGWALL #3																
	26	5	33'- 1"	3W501	STR												
)	26	5	5'- 5"	3W502	STR												
	24	5	19'- 9"	3W503	STR												
	36	5	23'- 0"	3W504	STR												
	24	5	7'- 4"	3W505	17		2'- 2"	3'- 0"	2'- 2"								
	24	5	3'- 5"	3W506	STR												
▲	48	5	8'- 6"	3W507	STR												
	24	5	5'- 6"	3W508	17		2'- 0"	1'- 6"	2'- 0"								
▲	18	5	23'- 0"	3W509	STR												
	2	5	23'- 0"	3W510	STR												
	34	6	12'- 0"	3W601	STR												
)	26	8	18'- 9"	3W801	2	5'- 6"	13'- 3"						---				
	23	8	15'- 3"	3W802	2	2'- 0"	13'- 3"						---				
	24	8	12'- 2"	3W803	STR												
)	69	9	12'- 0"	3W901	STR												

ITEM	EACH	SIZE	LENGTH	MARK	TYPE	A	B	C	D	E	F	G	H	J	K	R	O
	WINGWALL #4																
	13	5	25'- 11"	4W501	STR												
)	23	5	5'- 5"	4W502	STR												
▲	23	5	16'- 8"	4W503	STR												
	30	5	22'- 2"	4W504	STR												
	23	5	7'- 4"	4W505	17		2'- 2"	3'- 0"	2'- 2"								
	18	5	3'- 5"	4W506	STR												
▲	38	5	8'- 3"	4W507	STR												
	20	5	5'- 6"	4W508	17		2'- 0"	1'- 6"	2'- 0"								
▲	20	5	20'- 0"	4W509	STR												
	2	5	9'- 1"	4W510	STR												
)	15	6	12'- 0"	4W601	STR												
	18	8	18'- 9"	4W801	2	5'- 6"	13'- 3"						---				
	18	8	15'- 3"	4W802	2	2'- 0"	13'- 3"						---				
	18	8	9'- 1"	4W803	STR												
	24	9	12'- 0"	4W901	STR												

~ NOTES ~

1. UNLESS OTHERWISE DESIGNATED, ALL BAR REINFORCEMENT FOR CONCRETE IN SIZES UP TO AND INCLUDING NO. 18 SHALL CONFORM TO THE REQUIREMENTS OF THE "SPECIFICATIONS FOR DEFORMED BILLET-STEEL BARS FOR CONCRETE REINFORCEMENT", AASHTO M 31 (ASTM A 615-SI). ALL BARS SHALL BE GRADE 60, UNLESS OTHERWISE DESIGNATED.
2. FOR TYPICAL BENDING DETAILS, RECOMMENDED PIN DIAMETER "D" OF BENDS AND HOOKS, AND OTHER STANDARD PRACTICE, SEE CURRENT CONCRETE REINFORCING STEEL INSTITUTE "MANUAL OF STANDARD PRACTICE".
3. BARS WHICH REQUIRE MORE ACCURATE BENDING THAN STANDARD PRACTICES SHOULD HAVE LIMITS INDICATED.
4. ALL DIMENSIONS ARE OUT TO OUT OF BAR EXCEPT "A" AND "G" ON STANDARD 180 DEGREE AND 135 DEGREE HOOKS.
5. "J" DIMENSION ON 180 DEGREE HOOKS TO BE SHOWN ONLY WHERE NECESSARY TO RESTRICT HOOK SIZE. OTHERWISE, STANDARD HOOKS ARE TO BE USED.
6. "H" DIMENSION ON STIRRUPS TO BE SHOWN ONLY WHEN NECESSARY TO MAINTAIN CLEARANCES.
7. WHERE SLOPE DIFFERS FROM 45 DEGREES, DIMENSIONS "H" AND "K" MUST BE SHOWN.
8. ▲ DENOTES BARS TO BE CUT IN FIELD.
9. ♦ DENOTES ONE EXTRA BAR ADDED FOR TESTING PURPOSES.
10.) DENOTES TWO EXTRA BARS ADDED FOR TESTING PURPOSES.
11. "E" IN PREFIX DENOTES EPOXY COATED REINFORCING STEEL.

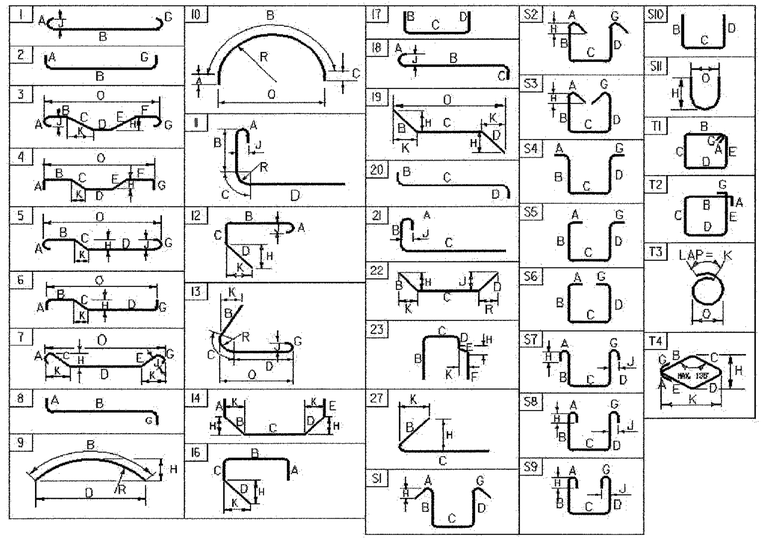

ASTM STANDARD REINFORCING BARS

BAR SIZE DESIGNATION	WEIGHT POUNDS PER FOOT	NOMINAL DIMENSIONS ROUND SECTION		
		DIAMETER INCHES	AREA INCHES ^{2}	PERIMETER INCHES
#3	0.376	0.375	0.11	1.178
#4	0.668	0.500	0.20	1.571
#5	1.043	0.625	0.31	1.963
#6	1.502	0.750	0.44	2.356
#7	2.044	0.875	0.60	2.749
#8	2.670	1.000	0.79	3.142
#9	3.400	1.128	1.00	3.544
#10	4.303	1.270	1.27	3.990
#11	5.313	1.410	1.56	4.430
#14	7.65	1.693	2.25	5.32
#18	13.60	2.257	4.00	7.09

BRIDGE #25A

PROJECT NAME:	SEARSBURG-WILMINGTON		
PROJECT NUMBER:	NH F 010-1(18)		
FILE NAME:	SD096RSS.xls	PLOT DATE:	2/19/2003
PROJECT LEADER:	R.WHITCOMB	DRAWN BY:	J.GILMORE
DESIGNED BY:	R.WHITCOMB	CHECKED BY:	R.WHITCOMB
REINFORCING STEEL SCHEDULE	BR240A	SHEET	~~4084~~ 2 OF 435

ITEM	NO. PIECES	SIZE	LENGTH	MARK	TYPE	A	B	C	D	E	F	G	H	J	K	O	R
1	APPROACH SLAB 1																
2	54	5	26'-11	E1AS501▲△	STR.												
3	55	9	26'-3	E1AS901▲△	1	1'-3	25'-0										
4																	
5																	
6	APPROACH SLAB 2																
7	23	5	40'-6	E2AS501▲△	STR.												
8	52	9	20'-10	E2AS901▲△	1	1'-3	19'-7										
9																	
10																	
11	DECK REINFORCEMENT																
12	524	5	42'-6	ES501	STR.												
13	266	5	40'-0	ES502	STR.												
14	38	5	40'-0	ES503 ▲	STR.												
15	2	5	28'-5	ES504	STR.	0'-11½"	1'-5½"	1'-5"	1'-5½"		0'-11½"						
16	578	5	6'-1	ES505 △	S5	~~0'-6~~	~~1'-10~~	~~1'-7~~	~~1'-8~~		~~0'-6~~						
17	12	5	2'-5	ES506▲	STR.												
18	12	5	7'-11	ES507 ▲	STR.												
19	12	5	10'-5	ES508 ▲	STR.												
20	1	5	44'-10	ES509	STR.												
21	70	5	40'-0	ES510	STR												
22	10	5	40'-0	ES511 ▲	STR.												
23	72	5	5'-9	ES512 △	T2		2'-6	0'-8½	1'-10	0'-8½							
24	102	5	40'-0	ES513 ▲	STR.												
25																	
26	524	6	42'-6	ES601	STR.												
27	102	6	40'-0	ES602 ▲	STR.												
28	434	6	40'-0	ES603	STR.												
29	62	6	40'-0	ES604 ▲	STR.												
30	76	6	40'-0	ES605	STR.												
31	40	6	24'-0	ES606 △	STR.												
32																	
33																	
34																	
35																	
36																	
37																	
38																	
39																	
40																	
41																	
42																	
43																	
44																	
45																	
46																	
47																	
48																	
49																	
50																	
51																	
52																	
53																	
54																	
55																	
56																	
57																	
58																	
59																	
60																	
61																	
62																	
63																	
64																	
65																	
66																	
67																	
68																	
69																	
70																	
71																	
72																	
73																	
74																	
75																	
76																	
77																	
78																	
79																	
80																	
81																	
82																	
83																	
84																	
85																	
86																	
87																	
88																	
89																	
90																	
91																	
92																	
93																	
94																	
95																	
96																	
97																	

ITEM	NO. PIECES	SIZE	LENGTH	MARK	TYPE	A	B	C	D	E	F	G	H	J	K	O	R
98																	
99																	
100																	
101																	
102																	
103																	
104																	
105																	
106																	
107																	
108																	
109																	
110																	
111																	
112																	
113																	
114																	
115																	
116																	
117																	
118																	
119																	
120																	
121																	
122																	
123																	
124																	
125																	
126																	
127																	
128																	
129																	
130																	
131																	
132																	
133																	
134																	
135																	
136																	
137																	
138																	
139																	
140																	
141																	
142																	
143																	
144																	
145																	
146																	
147																	
148																	
149																	
150																	
151																	
152																	
153																	
154																	
155																	
156																	
157																	
158																	
159																	
160																	
161																	
162																	
163																	
164																	
165																	
166																	
167																	
168																	
169																	
170																	
171																	
172																	
173																	
174																	
175																	
176																	
177																	
178																	
179																	
180																	
181																	
182																	
183																	
184																	
185																	
186																	
187																	
188																	
189																	
190																	
191																	
192																	
193																	
194																	

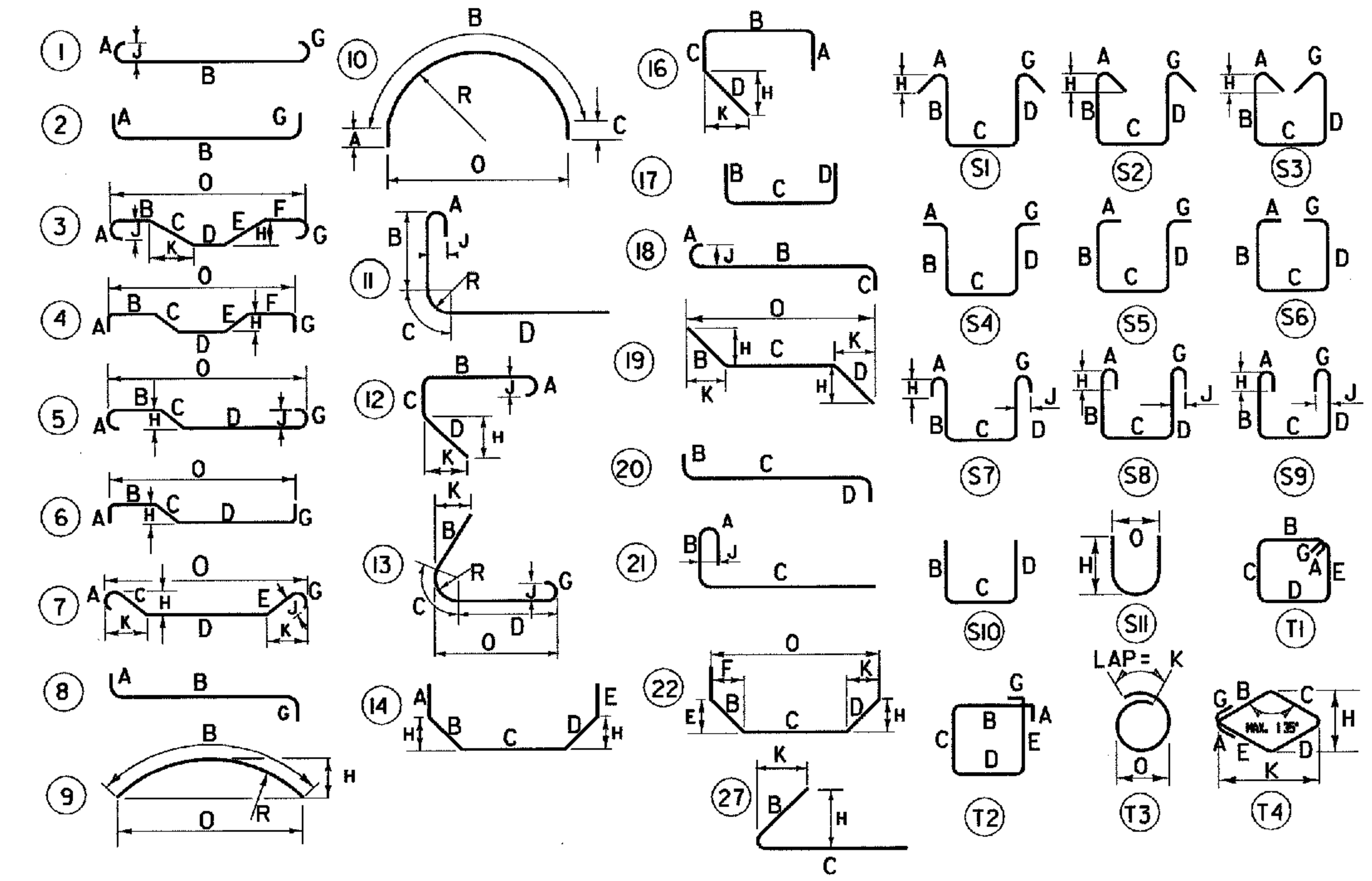

ASTM STANDARD REINFORCING BARS

BAR SIZE DESIG-NATION	WEIGHT POUNDS PER FOOT	NOMINAL DIMENSIONS ROUND SECTION		
		DIAMETER INCHES	CROSS SEC-TIONAL AREA SQ. INCHES	PERIMETER INCHES
#3	.376	.375	.11	1.178
#4	.668	.500	.20	1.571
#5	1.043	.625	.31	1.963
#6	1.502	.750	.44	2.356
#7	2.044	.875	.60	2.749
#8	2.670	1.000	.79	3.142
#9	3.400	1.128	1.00	3.544
#10	4.303	1.270	1.27	3.990
#11	5.313	1.410	1.56	4.430
#14	7.65	1.693	2.25	5.32
#18	13.60	2.257	4.00	7.09

NOTES:

1. UNLESS OTHERWISE DESIGNATED, ALL BAR REINFORCEMENT FOR CONCRETE IN SIZES UP TO AND INCLUDING NO. 18 SHALL CONFORM TO THE REQUIREMENTS OF THE SPECIFICATIONS FOR DEFORMED BILLET-STEEL BARS FOR CONCRETE REINFORCEMENT, AASHTO M 31(ASTM A 615-S1). ALL BARS SHALL BE GRADE 60, UNLESS OTHERWISE DESIGNATED.
2. FOR TYPICAL BENDING DETAILS, RECOMMENDED PIN DIAMETER D OF BENDS AND HOOKS, AND OTHER STANDARD PRACTICE, SEE CURRENT CONCRETE REINFORCING STEEL INSTITUTE MANUAL OF STANDARD PRACTICE.
3. BARS WHICH REQUIRE MORE ACCURATE BENDING THAN STANDARD PRACTICES SHOULD HAVE LIMITS INDICATED.
4. ALL DIMENSIONS ARE OUT TO OUT OF BAR EXCEPT A AND G ON STANDARD 180 DEGREE AND 135 DEGREE HOOKS.
5. J DIMENSION ON 180 DEGREE HOOKS TO BE SHOWN ONLY WHERE NECESSARY TO RESTRICT HOOK SIZE. OTHERWISE, STANDARD HOOKS ARE TO BE USED.
6. H DIMENSION ON STIRRUPS TO BE SHOWN ONLY WHEN NECESSARY TO MAINTAIN CLEARANCES.
7. WHERE SLOPE DIFFERS FROM 45 DEGREES, DIMENSIONS H AND K MUST BE SHOWN.
8. ▲ DENOTES BARS TO BE CUT IN FIELD.
9. ♦ DENOTES BARS TO BE BENT IN FIELD.
10. ✳ DENOTES ONE EXTRA BAR ADDED FOR TESTING PURPOSES.
11. △ DENOTES TWO EXTRA BARS ADDED FOR TESTING PURPOSES.
12. E IN PREFIX DENOTES EPOXY COATED REINFORCING STEEL.

CLOUGH, HARBOUR & ASSOCIATES LLP
ENGINEERS, SURVEYORS, PLANNERS & LANDSCAPE ARCHITECTS
III WINNERS CIRCLE ALBANY, NEW YORK, 12205

STATE OF VERMONT
AGENCY OF TRANSPORTATION

Town Of SEARSBURG	Bridge No. 25A
	Log Sta.
Highway No. VT. RTE. 9	Surv. Sta.
VT. RTE. 9 OVER DEERFIELD RIVER	
RIENFORCING STEEL SCHEDULE 2 - BR 25A	
Designed By D. VIENI	Drawn by K. DETRICK
Checked By M. OLSTAD Date 2/2002	Bridge Design Supervisor M. OLSTAD Date 2/2002
PROJECT SEARSBURG - WILMINGTON	PROJECT NO. NHF 010-1(18)
I.G.C. Info.	
Bridge Sheet No. BR339	Sheet 201 OF 435

FILE NAME =u:\9755\MSTN\15\BRDG25A\25a_barlist.DGN
DATE/TIME =02/20/02
USER =2225

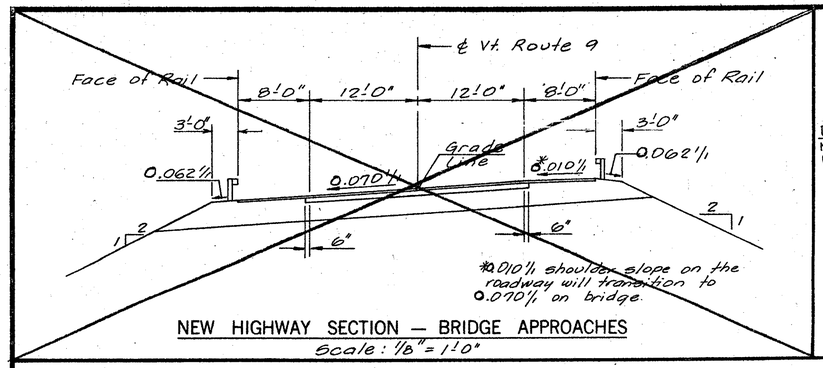

NEW HIGHWAY SECTION — BRIDGE APPROACHES

Scale: 1/8" = 1'-0"

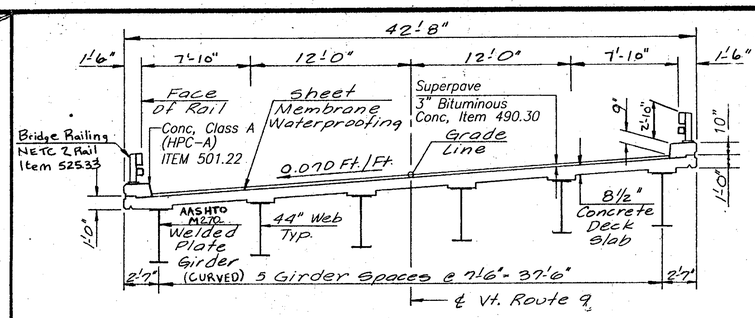

BRIDGE TYPICAL SECTION

Scale: 3/16" = 1'-0"

⚠ LIST OF BRIDGE SHEETS

BR400	PRELIMINARY INFORMATION	BR412	BEARING TABLES
BR401	QUANTITY SHEET	BR413	MISCELLANEOUS DETAILS
BR402	PLAN, ELEVATION AND GENERAL NOTES	BR414	ABUTMENT 1 PLAN
BR403	BORING LOGS	BR415	ABUTMENT 1 FOOTING PLAN
BR404	TYPICAL SECTION	BR416	ABUTMENT 1 ELEVATION
BR405	DECK REINFORCING	BR417	ABUTMENT 1 WINGWALL ELEVATIONS
BR406	FRAMING PLAN	BR418	ABUTMENT 1 SECTIONS
BR407	GIRDER DETAILS	BR419	APPROACH SLAB 1 DETAILS
BR408A	EXPANSION JOINT DETAILS	BR420	ABUTMENT 2 PLAN, ELEVATION & SECTION
BR408B	EXPANSION JOINT PLAN	BR421	WINGWALL 3 & 4 ELEVATIONS AND SECTION
BR408C	CURB PLATE DETAILS	BR422	APPROACH SLAB 2 DETAILS
BR409A	LEFT CURB PLATE DETAILS	BR423	PIER 1 PLAN AND ELEVATION
BR409B	RIGHT DURB PLATE DETAILS	BR424	PIER 2 PLAN AND ELEVATION
BR409C	DOWNSPOUT DETAILS	BR425	DRILLED SHAFT DETAILS
BR410	EXPANSION BEARING DETAILS	BR426	REINFORCING STEEL SCHEDULE 1
BR411	FIXED BEARING DETAILS	BR427	REINFORCING STEEL SCHEDULE 2

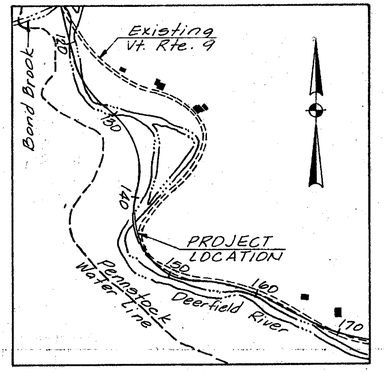

LOCATION PLAN

SCALE: 1" = 800'

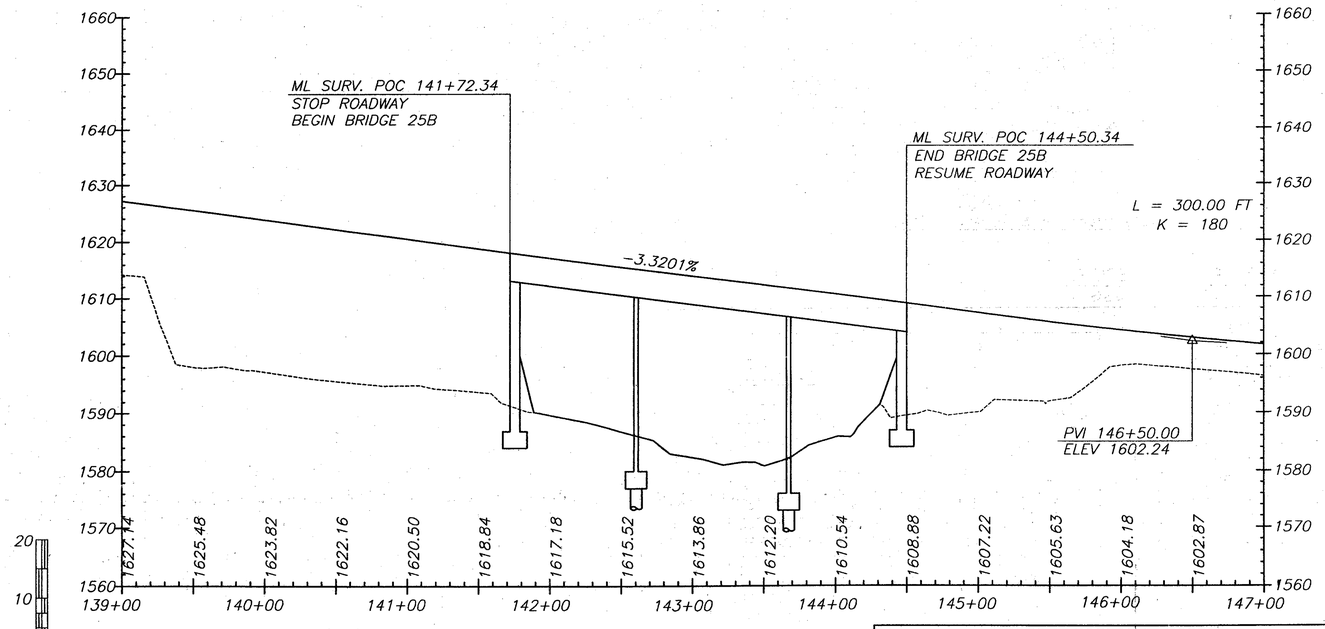

⚠ PROFILE — VT. ROUTE 9

Revisions: by CLOUGH HARBOUR & ASSOC. LLP	App'd. By:	Date:
⚠ - PROFILE, INDEX, ALLOWABLES, HPC CURB	MWO	6/01

FINAL HYDRAULICS REPORT

HYDROLOGIC DATA

DRAINAGE AREA= 97.1 SQUARE MILES
CHARACTER OF TERRAIN: MOUNTAINOUS AND FORESTED
CHARACTER & TYPE OF STREAM: PERENNIAL, FLASHY AND SINOUS
NATURE OF STREAMBED: GRAVEL, COBBLES TO LARGE BOULDERS
Q2.33= 2700 cfs — Q50= 11200 cfs
Q10= 6000 cfs — Q100= 13800 cfs
Q25= 8900 cfs — Q500= 22500 cfs
DATE OF FLOOD OF RECORD: SEPTEMBER 1938
WATER SURFACE ELEV.: UNKNOWN ESTIMATED DISCHARGE: UNKNOWN
NATURAL STREAM VELOCITY @ FLOOD OF RECORD @ Q50 = 12.1 fps
ICE CONDITIONS: MODERATE DEBRIS: MODERATE
DOES THE STREAM REACH MAXIMUM HIGHWATER ELEVATION RAPIDLY? YES
IS ORDINARY RISE RAPID? YES
IS STAGE AFFECTED BY UPSTREAM OR DOWNSTREAM CONDITIONS? YES
IF YES, DESCRIBE: SEARSBURG AND SOMERSET RESERVOIRS ARE UPSTREAM OF THIS SITE
WATERSHED STORAGE 4% HEADWATERS UNIFORM THROUGHOUT WATERSHED IMMEDIATELY ABOVE SITE

EXISTING STRUCTURE

STRUCTURE TYPE: N/A - BRIDGE 25B IS A NEW STRUCUTRE YEAR BUILT:
CLEAR SPAN (NORMAL TO STREAM): ---
VERTICAL CLEARANCE ABOVE STREAMBED: ---
WATERWAY OF FULL OPENING: ---
DISPOSITION OF STRUCTURE: --
TYPE OF MATERIAL UNDER SUBSTRUCTURE: UNKNOWN
WATER SURFACE ELEV. @ Q2.33= --- VELOCITY= ---
Q10= --- " = ---
Q25= --- " = ---
Q50= --- " = ---
Q100= --- " = ---
LONG TERM STREAM BED CHANGES: ---
IS THE ROADWAY OVERTOPPED BELOW THE Q100? --- FREQUENCY: ---
RELIEF ELEVATION: --- DISCHARGE OVER ROAD @ Q100: ---
UPSTREAM STRUCTURE: TOWN: SEARSBURG DISTANCE: 0.5 mi
HIGHWAY NO.: VT ROUTE 9 STRUCTURE NO.: 25
STRUCTURE TYPE: THREE SPAN CONC. T-BEAM BRIDGE
CLEAR SPAN: 105 ft CLEAR HEIGHT: 20 ft
YEAR BUILT: 1934 FULL WATERWAY: 1700 sq ft
DOWNSTREAM STRUCTURE: TOWN: WILMINGTON DISTANCE: 1.4 mi
HIGHWAY NO.: TH-31 STRUCTURE NO.: 57
STRUCTURE TYPE: SINGLE SPAN PLATE GIRDER BRIDGE
CLEAR SPAN: 96 ft CLEAR HEIGHT: 13 ft
YEAR BUILT: 1985 FULL WATERWAY: 1200 sq ft

PROPOSED STRUCTURE

STRUCTURE TYPE: 3 SPAN CONTINOUS CURVED PLATE GIRDER
CLEAR SPAN (NORMAL TO STREAM): 188 ft
VERTICAL CLEARANCE ABOVE STREAMBED: 23 ft
WATERWAY OF FULL OPENING: 3850 sq ft
WATER SURFACE ELEV. @ Q2.33 = 1591.2 ft VELOCITY = 9.8 fps
" Q10 = 1593.6 ft " = 11.5 fps
" Q25 = 1595.2 ft " = 12.4 fps
" Q50 = 1595.7 ft " = 13.2 fps
" Q100 = 1596.8 " = 13.8 fps
IS THE ROADWAY OVERTOPPED BELOW THE Q100? NO FREQUENCY: ABOVE Q100
RELIEF ELEVATION: 1600 ft DISCHARGE OVER ROAD @ Q100: NONE
AVERAGE LOW ELEVATION OF SUPERSTRUCTURE: 1607.4 ft
VERTICAL CLEARANCE @ Q50 = 11.7 ft (average clearnace)
SCOUR: 8 FT OF PIER SCOUR (MAX) AND NO CONTRACTION SCOUR
REQUIRED CHANNEL PROTECTION: TYPE IV STONE FILL

PERMIT INFORMATION

AVERAGE DAILY FLOW: 200 cfs*
ORDINARY LOW WATER: 90 cfs* DEPTH: 1 ft
ORDINARY HIGH WATER: 1200 cfs* DEPTH: 3 ft

ADDITIONAL COMMENTS

*OPERATION OF THE SEARSBURG RESERVOIR PENSTOCK MAY HAVE AN EFFECT ON THESE FLOW RATES.

ALLOWABLE STRESSES:

1. DESIGN LIVE LOAD AASHTO HS 25-44
⚠ 2. ALLOWABLE LOAD FOR SPREAD FOOTINGS ON SOIL 8 Ksf @ ABUTMENTS ON LEDGE N.A.
3. ALLOWABLE LOAD FOR DRILL SHAFTS @ PIERS (SEE DRILLED SHAFT NOTES ON BR3)
4. ALLOWABLE STRESS FOR STRUCTURAL STEEL ASTM A AASHTO M270 TENSION 27.0 K.S.I.
5. ALLOWABLE STRESS FOR REINFORCING STEEL GRADE 60 TENSION 24 K.S.I. COMPRESSION N.A.
6. ALLOWABLE STRESS FOR CONCRETE CLASS A f_c 4.0 K.S.I. f_c 1.6 K.S.I.
CLASS B (HPC-B) 3.5 K.S.I. f_c 1.1 K.S.I.
CLASS A (HPC-A) 5.0 K.S.I. f_c 2.0 K.S.I.

TRAFFIC MAINTENANCE:

1. IS TRAFFIC TO BE MAINTAINED? Yes IF YES, ON EXISTING STRUCTURE ✓ OR ON TEMPORARY BRIDGE
2. TEMPORARY BRIDGE REQUIREMENTS: ONE OR TWO WAY TRAFFIC CONTROL SIGNALS REQUIRED
MINIMUM CLEAR SPAN MINIMUM CLEAR HEIGHT MINIMUM WATERWAY AREA
ARE SIDEWALKS REQUIRED? IF SO, ON WHAT SIDE?

Traffic will be maintained on new bridge when existing Vt. Rte. 9 bridge is removed.

ADDITIONAL DESIGN CONSIDERATIONS

For General Notes, see Sheet BR402

STATE OF VERMONT — TIMOTHY L. GRANT — NO. 7645 Structural LICENSED PROFESSIONAL ENGINEER
8/25/2000

LOAD RATING (TONS)							
LOAD FACTOR	TRUCK H	HS	352	6 AXLE	3A. STR.	4A. STR.	5A. SEMI
INVENTORY A=2.17; B=1.00	39	55					
POSTED A=1.55; B=1.40	55	77	111		95	97	102
OPERATING A=1.30; B=1.67		92	132	154	114	115	

McFARLAND - JOHNSON ENGINEERS, INC.

RECOMMENDED FOR APPROVAL — STRUCTURES ENGINEER — DATE
RECOMMENDED FOR APPROVAL — CHIEF OF DESIGN — DATE
APPROVED BY — DIRECTOR OF ENGINEERING & CONSTRUCTION — DATE

REVISIONS		
NO.	DESCRIPTION	BY & DATE
1	Load Factor Rating added NETC Rail ~~Silica Fume Concrete Curb~~ Pot Bearing Type & Orientations revised Approach Slab Details revised Scuppers removed Expansion Joint changed	TLG 11/99

STATE OF VERMONT
AGENCY OF TRANSPORTATION

TOWN OF SEARSBURG	Bridge No. 25 B
	Log Sta.
HIGHWAY NO. ROUTE 9	Surv. Sta. 143+11
ROUTE 9 OVER DEERFIELD RIVER	
PRELIMINARY INFORMATION	
Designed by J.J.R.	Drawn by J.J.R.
Checked by R.P.J. date 11/85	Bridge Design Supervisor W.T.S. date 2/85
PROJECT SEARSBURG-WILMINGTON	PROJECT NO. F-010-1(18)
Bridge Sheet No. BR400	Sheet 202 of 435

M.J. Job No. 83-3302
M.J. Br. No. 2
M.J. Sht. No. 1
Mylar Scale = 1"=1"

BRIDGE QUANTITY SHEET

STATE OF VERMONT
AGENCY OF TRANSPORTATION
STRUCTURES DIVISION

	ITEM NO.	ITEM	UNIT	QUANTITY BREAKDOWN							TOTAL	FINAL
				SUPER-STRUCTURE	ABUTMENT 1	PIER 1	PIER 2	ABUTMENT 2	APPROACH SLABS	CHANNEL QUANTITIES	MISC.		
	203.27	UNCLASSIFIED CHANNEL EXCAVATION	CY		380			250				630	
Ⓡ	203.32	GRANULAR BORROW	CY		3183			1,680				4,863	
	204.30	GRANULAR BACKFILL FOR STRUCTURES	CY		2,220	30	30	560				2,840	
	205.10	DRILLING AND BLASTING OF SOLID ROCK (MOD.)	LF			63	59					122	
	208.30	COFFERDAM EXCAVATION, EARTH	CY			140	135					275	
	208.35	COFFERDAM EXCAVATION, ROCK	CY			155	140					295	
	208.40	COFFERDAM @ BR25B, PIER ONE	LS			1						1	
	208.40	COFFERDAM @ BR25B, PIER TWO	LS				1					1	
Ⓡ	490.30	SUPERPAVE BITUMINOUS CONCRETE PAVEMENT (PG 58-28)	TON	170								170	
	501.22	CONCRETE, CLASS A (HPC-A)	CY	40	4			2				46	
	501.221	CONCRETE, CLASS A, QC/QA	CY	337								337	
	501.25	CONCRETE, CLASS B (HPC-B)	CY		1,057	375	327	333	84			2,176	
	504.10	FURNISHING EQUIPMENT FOR DRIVING PILING (MOD.)	LS								1	1	
	505.25	C.I.P. CONCRETE PILING (MOD - EARTH) (8' DIA.)	LF			88	80					168	
	505.40	PILE LOADING TEST (MOD.)	EA			2	2					4	
	506.55	STRUCTURAL STEEL (PLATE GIRDER)	LB	366,000								366,000	
	507.15	REINFORCING STEEL	LB		91,270	38,025	44,565	29,050	12,595			215,505	
	507.17	EPOXY COATED REINFORCING STEEL	LB	111,130								111,130	
	508.15	SHEAR CONNECTORS (3,564 - 7/8" DIA. x 7")	LS	1								1	
	513.25	STRUCTURAL PAINTING, SHOP APPLIED (11.36 ± TONS)	LS	1								1	
	513.40	SURFACE PREPERATION, SHOP	LS	1								1	
	514.10	WATER REPELLENT	GAL	20	19	18	16	7				80	
	516.10	BRIDGE EXPANSION JOINT (PLUG JOINT)	LF		65							65	
	516.10	BRIDGE EXPANSION JOINT (VT JOINT)	LF					48				48	
	519.20	SHEET MEMBRANE WATERPROOFING (MOD.-TORCH APPLIED)	SY	1,180								1,180	
	525.33	BRIDGE RAILING - NETC 2 RAIL	LF	674								674	
	531.10	BEARING DEVICE ASSEMBLY (EXPANSION @ ABUTMENT)	EA		6			6				12	
	531.10	BEARING DEVICE ASSEMBLY (FIXED @ PIER)	EA			6						6	
	531.10	BEARING DEVICE ASSEMBLY (EXPANSION @ PIER)	EA				6					6	
	613.10	STONE FILL, TYPE I	CY		260			130				390	
	613.13	STONE FILL, TYPE IV	CY		1,166	336	332	632				2,466	
	616.28	CAST-IN-PLACE CONCRETE CURB, TYPE B	LF		80			80				160	
	649.31	GEOTEXTILE UNDER STONE FILL	SY		600			320				920	
	651.40	GRUBBING MATERIAL	SY		360			200				560	

* DESIGNATES ROADWAY ITEM

BRIDGE(S) AT SURV. STATION(S) 141+72.34 TO 144+47.00
LOCATION(S) VT. RTE. 9 OVER DEERFEILD RIVER

PREPARED BY: J. LAGONE
CHECKED BY: D. VIENI
SUPERVISOR: M.W. OLSTAD

PROJECT: SEARSBURG - WILMINGTON
PROJECT NO: NHF 010-1(18)
BR BR401 OF
SHEET NO: 203 OF 435

dd096bq4.1

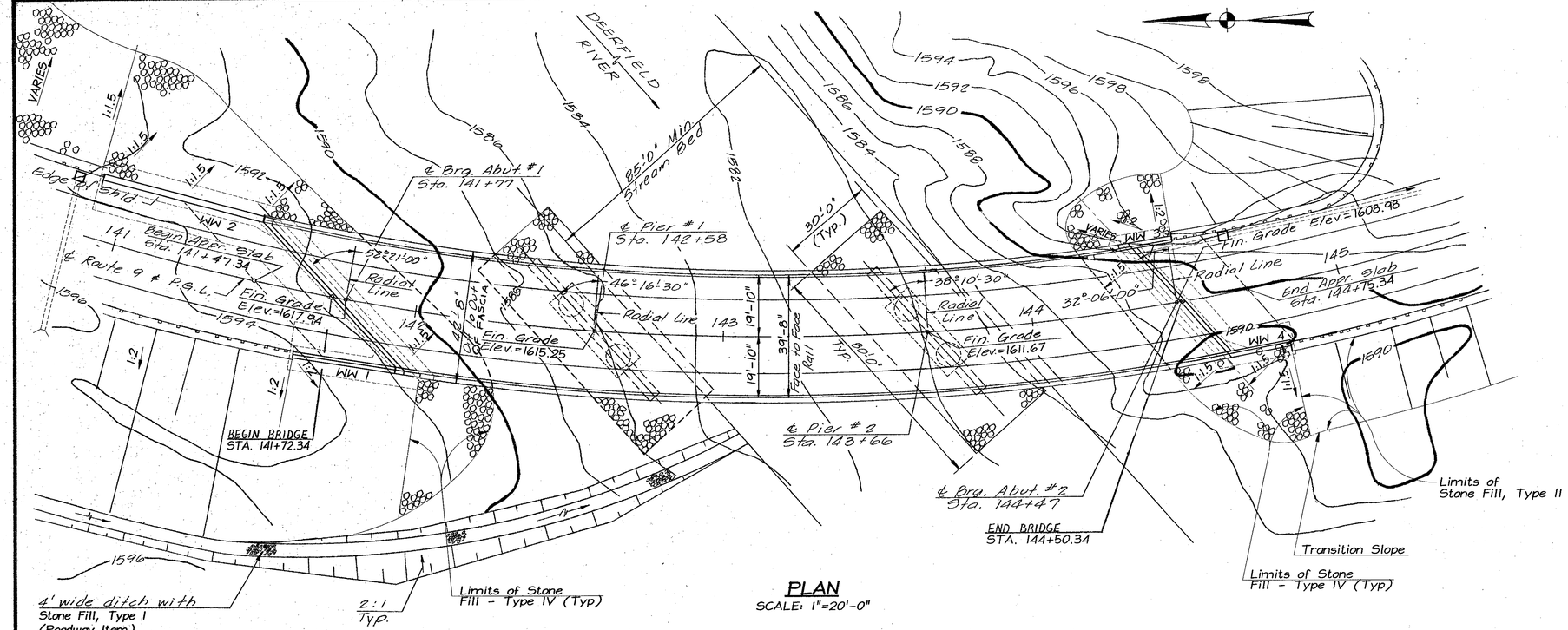

PLAN
SCALE: 1"=20'-0"

CURVE DATA

Δ = 91°18'18.5" Lt.	L = 1217.40'
D = 7°30'00"	E = 328.96'
R = 763.94'	Bank = 0.070 FT/FT.
T = 781.55'	

GENERAL NOTES:

1. All surfaces of AASHTO M270 , Structural Steel, shall be blast cleaned as specified under section 506.14 (a).
2. Bearing Device Assemblies, including anchor bolts, shall be paid for at the unit bid price each for Item 531.10 Bearing Device Assembly.
3. Water Repellent shall be applied to all exposed concrete surfaces in the abutments, piers and superstructure except area of deck under bituminous surface and the underside of the deck slabs between drip notches.
4. Drip notches are to be discontinued 4'-0" upgrade from from Abutment No. 2, Pier No. 1 and Pier No. 2.

SEE SHEET BR4 FOR MORE GENERAL NOTES

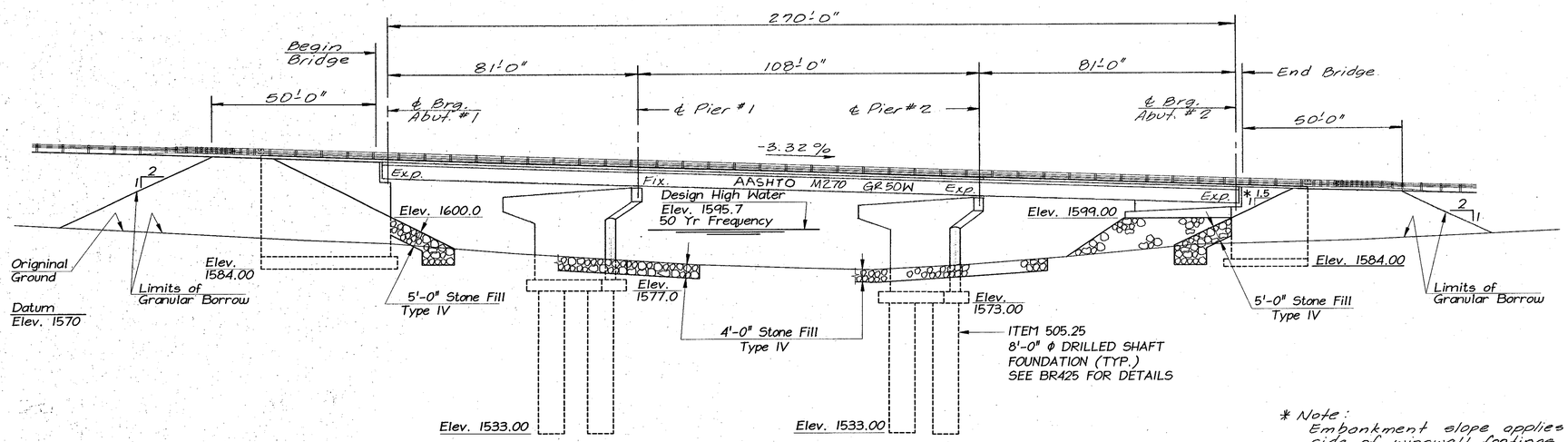

ELEVATION
SCALE: 1"=20'-0"

* Note:
Embankment slope applies also at side of wingwall footings.

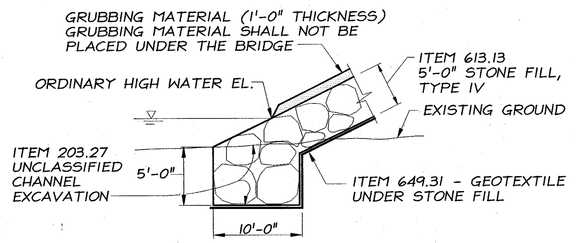

TYPICAL EMBANKMENT PROTECTION DETAIL
(NOT TO SCALE)

Note:
Topsoil will be stripped under Granular Borrow, Item 203.32.

Revisions: by CLOUGH HARBOUR & ASSOC. LLP	App'd. By:	Date:
⚠ REVISED WINGWALLS, ELEVATIONS, PIER FOUNDATIONS	MWO	6/01

McFARLAND - JOHNSON ENGINEERS, INC.

STATE OF VERMONT
AGENCY OF TRANSPORTATION

TOWN OF SEARSBURG	Bridge No. 25 B
HIGHWAY NO. VT. ROUTE 9	Log Sta. / Surv. Sta. 143+11
VT. ROUTE 9 OVER DEERFIELD RIVER	
PLAN, ELEVATION AND GENERAL NOTES	
Designed by W.T.S.	Drawn by J.J.R.
Checked by R.P.J. date 11/85	Bridge Design Supervisor W.T.S. date 9-84
PROJECT SEARSBURG-WILMINGTON	PROJECT NO. FD10-1(18)
Bridge Sheet No. BR402	Sheet 204 of 435

M.J. Job No. 83-3302
M.J. Br. No. 2
M.J. Sht. No. 2
BRUNING 44-131 40151
BR-6

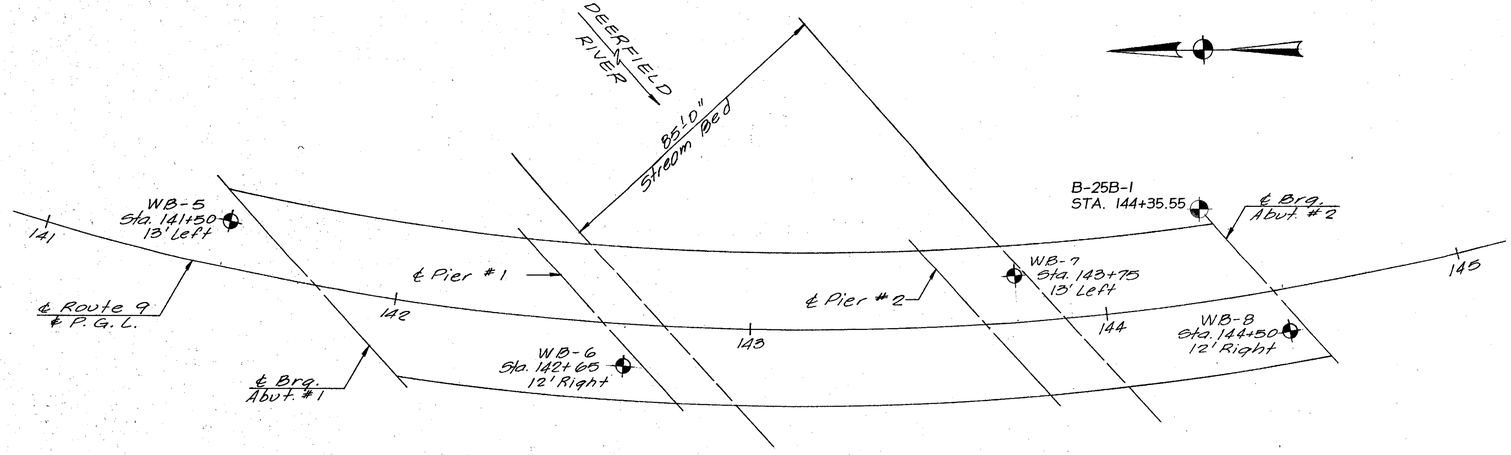

PLAN

Scale: 1"=20'

Bottom of Footing EL. 1584.00

NOTES:

Notes and Legend shown on BR25 & BR25A shall apply to borings shown on this sheet.

LEGEND

- Standard Penetration Boring
- Ground water

Casing Inside Diameter	3"
Sampler Outside Diameter	2"
Sampler Inside Diameter	1 3/8"
Weight of Hammer	140#
Hammer Fall	30"

DATUM

1610
1600
1590
1580
1570
1560
1550

BORING NO. 5
SURFACE ELEVATION 1592.9

DEPTH	SAMPLE NO.	STANDARD PENETRATION	LIQUID LIMIT	PLASTICITY INDEX	CLASSIFICATION AND PROPERTIES OF SOIL AND ROCK
	S-1	50			S-1: Light brown-grey fine sand, some silt, little medium to coarse sand, trace gravel.
10	S-2	60			S-2: Light brown-grey coarse -fine sand, some-little gravel, trace-little silt.
	S-3				S-3: Same as S-2.
	S-3A	185			S-3A: Light brown coarse-fine sand, some gravel, some -little silt (glacial till).
20	S-4	256			S-4: Olive-grey fine-coarse sand, silt & gravel (glacial till).
	S-5	1196			S-5: Same as S-4.
					Refusal at 25.5' (1,567.4').
30					

Bottom of Footing EL. 1584.00

BORING NO. 6
SURFACE ELEVATION 1586.8

DEPTH	SAMPLE NO.	STANDARD PENETRATION	LIQUID LIMIT	PLASTICITY INDEX	CLASSIFICATION AND PROPERTIES OF SOIL AND ROCK
					Boulders (nested).
	S-1	*			S-1: Nested boulders (no recovery).
10	S-2	163			S-2: Olive-grey silt and sand, little gravel, trace cobbles and boulders (glacial till).
	S-3	176			S-3: No recovery (boulder ?)
20	S-4	124			S-4: Olive-grey silt & sand, little gravel, trace cobbles and boulders.
	S-5	516			S-5: No recovery.
					Boring refusal at 25.5' (1,561.3').
30					

Bottom of Footing EL. 1577.00

	Penetration	Blows/6"
* S-1	12"	68-48

Approx. Bottom of Shafts EL. 1533.00

BORING NO. 7
SURFACE ELEVATION 1584.8

DEPTH	SAMPLE NO.	STANDARD PENETRATION	LIQUID LIMIT	PLASTICITY INDEX	CLASSIFICATION AND PROPERTIES OF SOIL AND ROCK
					No sample taken; nested cobbles and boulders.
	S-1	*			S-1: Light brown-greyish brown coarse-fine sand, some gravel, little silt.
10	S-2	109			S-2: No sample.
	S-3	100			S-3: Olive-greyish brown fine to coarse sand, some gravel, little silt, trace cobbles & boulders (glacial till).
20	S-4	106			S-4: Olive-grey fine to coarse sand & silt, some-little gravel, trace cobbles and boulders.
	S-5	206			S-5: No sample.
					Refusal at 25.5' (1,559.3').
30					

Bottom of Footing EL. 1573.00

	Penetration	Blows/6"
* S-1	9"	64-100/3"

Approx. Bottom of Shafts EL. 1533.00

BORING NO. 8
SURFACE ELEVATION 1589.2

DEPTH	SAMPLE NO.	STANDARD PENETRATION	LIQUID LIMIT	PLASTICITY INDEX	CLASSIFICATION AND PROPERTIES OF SOIL AND ROCK
	S-1	37			S-1: Dark brown fine sand & silt, little medium-coarse sand, trace gravel and organics (topsoil).
	S-2	100/2			Cored through boulders. S-2: Boulders.
10	S-3	*			S-3: Light brown-olive brown fine to coarse sand, little -some gravel, with silt, trace cobbles boulders (glacial till).
	S-4	*			S-4: Olive brown coarse-fine sand, some-little gravel, little silt, trace cobbles (glacial till).
20	S-5	100/2			S-5: Same as S-4 (stone in tip).
	S-6	*			S-6: Same as S-5.
					Refusal at 26.0'. (1,563.2')
30					

Bottom of Footing EL. 1584.00

	Penetration	Blows/6"
* S-3	12"	41-78-100/5"
* S-4	8"	56-80/2"
* S-5	12'	66-100/6"

CLOUGH, HARBOUR & ASSOCIATES LLP
ENGINEERS, SURVEYORS, PLANNERS & LANDSCAPE ARCHITECTS

PROJECT NUMBER: 9755.07.01 12/29/00

VT. RTE. 9 Over Deerfield River
SUBSURFACE LOG
HOLE NUMBER B-25B-1
Page 1 of 2

LOCATION: Searsburg, VT
CLIENT: State of Vermont Agency of Transportation
CONTRACTOR: New England Boring Contractors, Inc.
DRILLER: T. Carpenter INSPECTOR: J. Coppola
START DATE: 2-26-01 FINISH DATE: 2-27-01
SURFACE ELEV. 1595.80 (ft; Estimated) CHECKED BY: MSO
DRILL FLUID: Water @ 2 ft. DRILLING METHOD: 3" FJC

WATER LEVEL OBSERVATIONS DURING DRILLING	DATE	TIME	WATER DEPTH (ft)	CASING BOTTOM (ft)	HOLE BOTTOM (ft)

SAMP./CORE RUN NO.	SAMP./CORE REC. (ft)	SAMP./CORE LEN. RECOVERED (ft)	Blows Per 6" on Split Spoon Sampler	Water Level in Sampler	SAMPLE NO.	DEPTH (ft)	GRAPHICS	DESCRIPTION AND CLASSIFICATION	ELEVATION (Feet)	Remarks on Character of Drilling, Water Return, etc.	WATER LEVELS AND/OR WELL DATA
S-1	2	0.8	11-13-15-16	28				f.m.c. SAND, Some f.c. Gravel, little silt, brown, compact, moist (A-3)	1595		
C-1	1.5	1	NA					COBBLES AND BOULDERS		Possible cobbles and boulders	
S-2	1.4	1	49-50-100/.4	R				f.m.c. SAND, little silt, little f.c. gravel, brown/gray, v. compact, wet (A-2-4)			
S-3	1.5	1.1	30-37-72	R		5		Similar Soil (A-2-4)	1590		
C-2	3.5	3.5	NA					COBBLES AND BOULDERS		Possible cobbles and boulders	
S-4	2	0.2	38-44-49-60	93		10		f.m.c. SAND, Some Silt, trace f.c. gravel, brown/gray, v. compact, moist (A-2-4)	1585	Roller bit to 15 ft.	
S-5	0.1	0.1	120/.1	R		15		Insufficient Sample	1580	Cobble in spoon Roller bit to 20 ft.	
S-6	1.5	1.5	38-46-92	R		20		f.m.c. SAND, Some Silt, little f.c. gravel, brown/gray, v. compact, moist (A-2-4)	1575	Roller bit to 25 ft.	
S-7	1.1	1.1	42-63-50/.1	R		25		f.m.c. SAND, Some Silt, trace f.c. gravel, brown/gray, v. compact, moist (A-2-4)	1570	Roller bit to 30 ft.	
S-8	1.2	1.2	45-61-100/.2	R		30		SILT, Some f.m.c. Sand, brown/gray, v. compact, moist (A-4)	1565	Roller bit to 35 ft.	
S-9	0.3	0.3	100/.3	R		35		SILT, little f.m.c. sand, little f.c. gravel, brown/gray, v. compact, moist (A-4)	1560	Roller bit to 40 ft.	
S-10	0	0	60/0	R		40		Insufficient Sample	1555	Possible cobbles and boulders, Roller bit to 45 ft.	
S-11	0.6	0.3	58-90/.1	R		45		SILT, Some f.m.c. Sand, trace f.c. gravel, brown/gray, v. compact, moist (A-4)	1550	Roller bit to 50 ft.	
S-12	1.5	1.5	63-85-50	R		50		SILT, Some f.m.c. Sand, little f.c. gravel, brown/gray, v. compact, moist (A-4)	1545		
						55		End of Boring at 51.5 ft	1540		

STATE OF VERMONT
AGENCY OF TRANSPORTATION

TOWN OF SEARSBURG	Bridge No. 25B
	Log Sta.
HIGHWAY NO. VT. ROUTE 9	Surv. Sta. 143+11
VT. ROUTE 9 OVER DEERFIELD RIVER	
BORING LOGS	
Designed by J.J.R.	Drawn by J.J.R.
Checked by J.J.M. date 12/85	Bridge Design Supervisor W.T.S. date 4-85

Revisions: by CLOUGH HARBOUR & ASSOC. LLP	App'd. By:	Date:
⚠ – ADDED BORING B25B-1	MWO	6/01

McFARLAND - JOHNSON ENGINEERS, INC.

PROJECT: SEARSBURG - WILMINGTON
PROJECT NO. F-010-1(18)
Bridge Sheet No. BR403 Sheet 205 of 435

M.J. Job No. 83-3302
M.J. Br. No. 25
M.J. Sht. No. 15
BRUNING 44-131-40151

BR-6

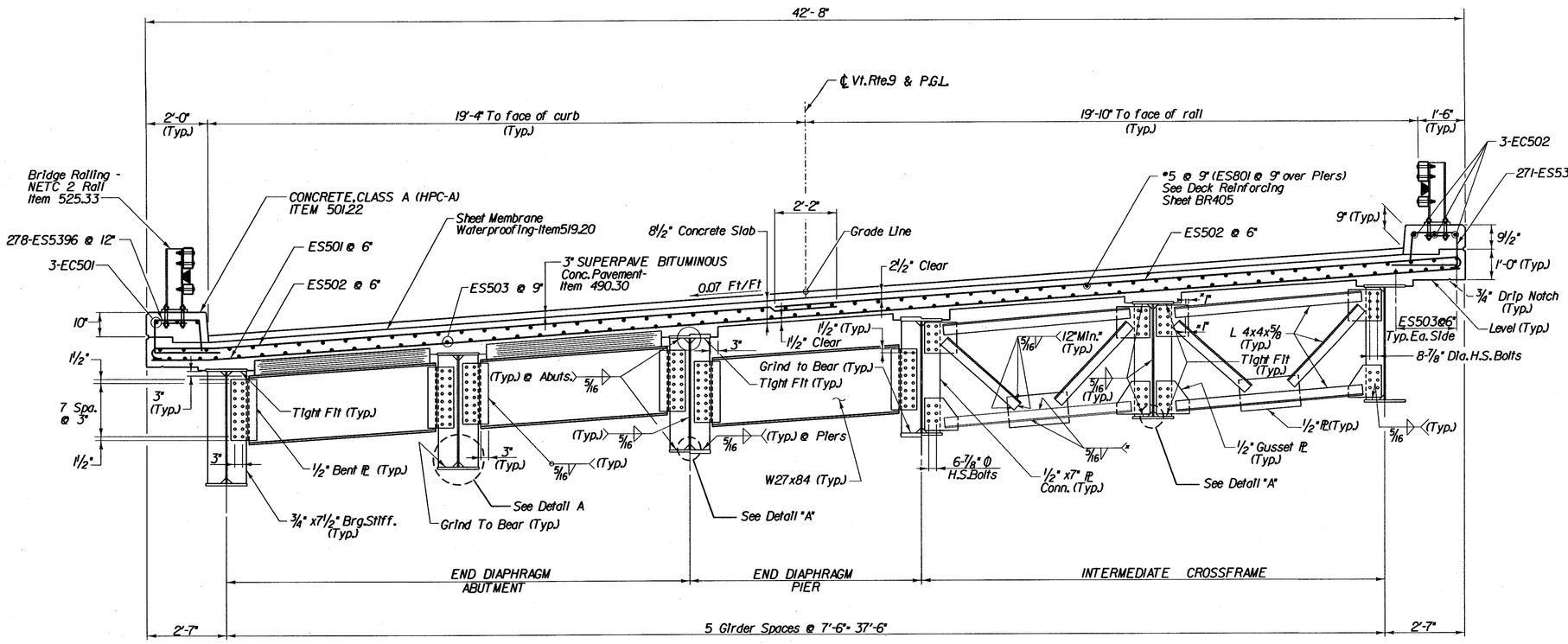

TYPICAL SECTION

SCALE ½" = 1'-0

1 0 1 2

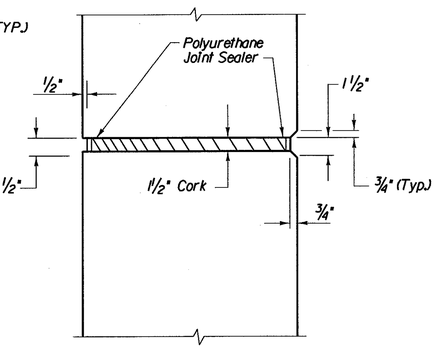

SECTION A-A

SCALE 1½" = 1'-0

1 9 6 3 0 1

NOTES

1. For Deck Reinforcing Plan, see sheet BR405.
2. For Location of Section B-B and C-C, see sheet BR405.
3. For Spacing of Curb Joints, See Sheet BR15.
4. All crossframe connections shall be made with ⅞" Dia. H.S. bolts in 15/16" Dia. holes. Washers shall be placed at nut. All connections shall first be brought to a "snug tight" condition. Final tightening shall be in accordance with section 506.19.
5. For Details of Bridge Railing NETC - 2 Rail, see Shts. BR17-BR19.
6. For Details of drip notch & scoring at fascia, see sheet BR15.
7. For Haunch Detail, see sheet BR413.
8. For Bridge End Details, see Sheets BR419 and BR422.
9. All intermediate cross frames, pier diaphragms and end diaphragms shall require charpy v-notch testing per AASHTO M270 and supplementary requirements for zone 2.

* End weld @ ½" max from edge of Gusset Pl (Typ.)

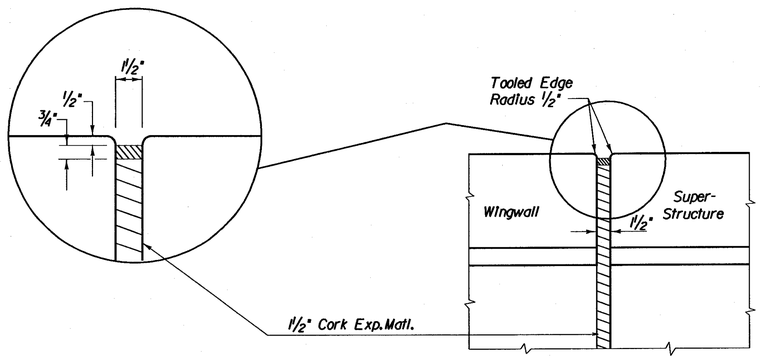

SECTION C-C

SCALE 1½" = 1'-0

1 9 6 3 0 1

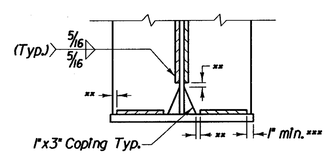

DETAIL A (TYP.) WELD TERMINATION & COPING DETAIL

(NOT TO SCALE)

** No weld for ¼" min. & ½" max.

***Maintain 1" min. from edge of flange

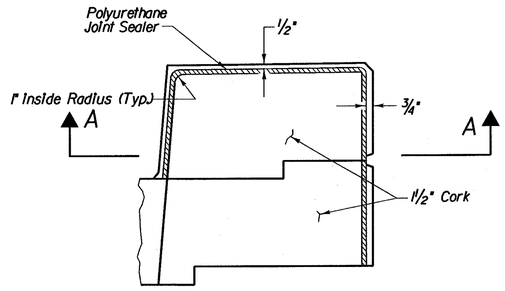

SECTION B-B

SCALE 1½" = 1'-0

1 9 6 3 0 1

STATE OF VERMONT
AGENCY OF TRANSPORTATION

Town Of SEARSBURG	Bridge No. 25B
	Log Sta.
Highway No. VT. ROUTE 9	Surv. Sta. 143+11
VT. ROUTE 9 OVER DEERFIELD RIVER	
TYPICAL SECTION	
Designed By R.P.J.	Drawn By M.J.R. / D.R.D.
Checked By J.J.M. T.L.G. Date 12-85 10-99	Bridge Design Supervisor W.T.S. Date
PROJECT SEARSBURG-WILMINGTON	PROJECT NO. F010-1(18)
I.G.C. Info.	
Bridge Sheet No. BR404	Sheet 206 of 435

McFARLAND - JOHNSON ENGINEERS, INC.

FILE NAME =u\19795\MSTN\BS\BRDG25B\25b_transect.dgn
DATE/TIME = 02/26/02
USER = 2225

PLOT SCALE= 1:2

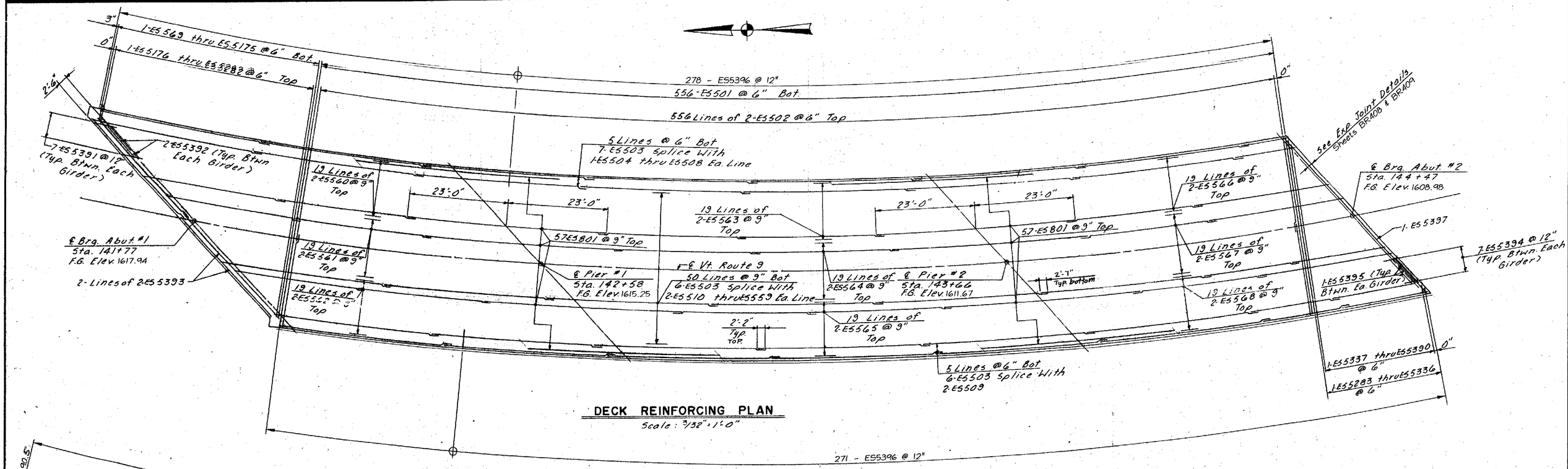

DECK REINFORCING PLAN

Scale: 3/32" = 1'-0"

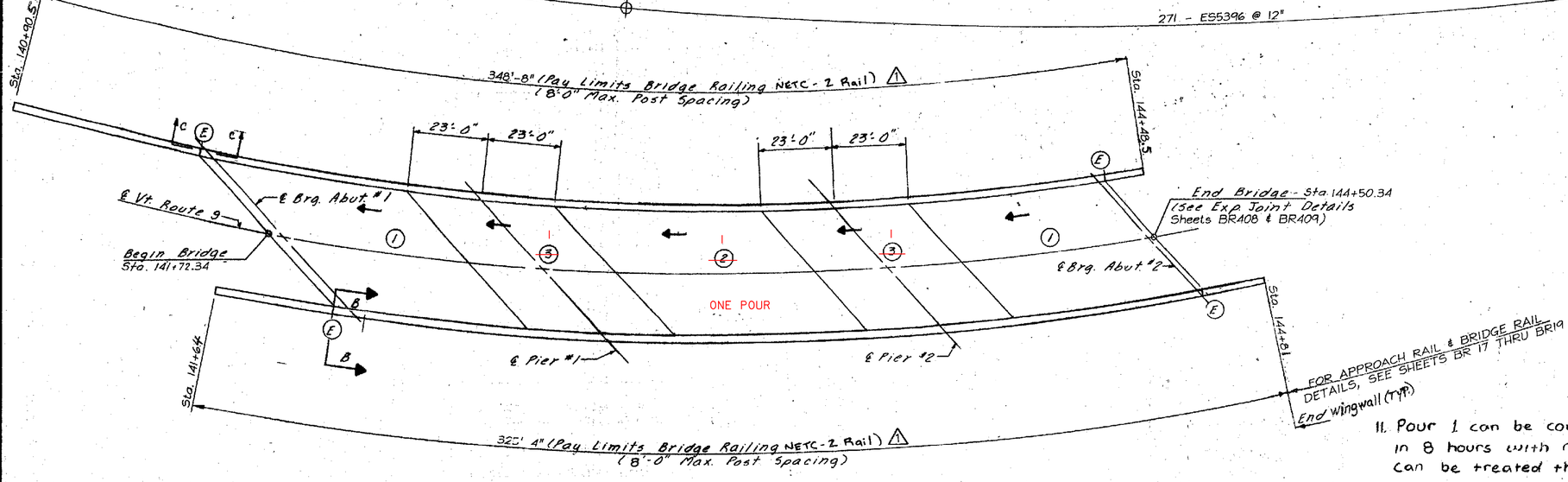

POURING SEQUENCE, CURB AND RAILING PLAN

Scale: 1" = 20'-0"

NOTES

1. For Sections B-B and C-C, see sht. BR404
2. For sections at ends of deck, see sht. BR419 & BR422.
3. For Typical Sections, see sht. BR404.
4. For curb reinforcing, see sht. BR404.
5. For Approach Railing details, see BR17 THRU BR19.
6. All deck pours listed shall be accomplished in a maximum of 8 hours and retarded as directed by the concrete engineer. All combinations of pours shall be submitted to the engineer for review and approval.
7. The contractor may submit other combinations of pours to the Vermont Agency of Transportation for review and approval.
8. There shall be a minimum delay of 96 hours between the end of one pour and the beginning of any other pour
9. The 2'-0" curb shall be placed in 15' sections as per NOTE 1 ON SHEET BR15. Placement details for the curb other than as detailed on this sheet, shall be submitted to the bridge railing fabricator by the contractor.
10. Rail posts shall be 2'-9" minimum from expansion joints and 1'-10" minimum from construction joints.
11. Pour 1 can be completed together in 8 hours with retarder. Pour 3 can be treated the same as Pour 1.

(E) Indicates Railing Expansion Joint

(1) Indicates Pour Sequence

← Indicates Direction of Pour

Revisions: by CLOUGH HARBOUR & ASSOC. LLP	App'd. By:	Date:
⚠ WINGWALL LENGTHS & BRIDGE RAIL LENGTHS	MWO	6/01

McFARLAND-JOHNSON ENGINEERS, INC.

STATE OF VERMONT
AGENCY OF TRANSPORTATION

Town Of SEARSBURG	Bridge No. 25 B
Highway No. VT. ROUTE 9	Log Sta. / Surv. Sta. 143+11
VT. ROUTE 9 OVER DEERFIELD RIVER	
DECK REINFORCING	
Designed By J.J.M.	Drawn By W.J.G.
Checked By J.J.M. Date 11-85	Bridge Design Supervisor W.T.S. Date 11-85
PROJECT SEARSBURG-WILMINGTON	PROJECT NO. F-010-1(18)
L.G.C. Info.	
Bridge Sheet No. BR405	Sheet 207 of 435

M.J. Sht. No 70

BRUNING 62105

M.J. Job No. 83-3302.0
M.J. Br. No. 2
M.J. Sht. No. 50

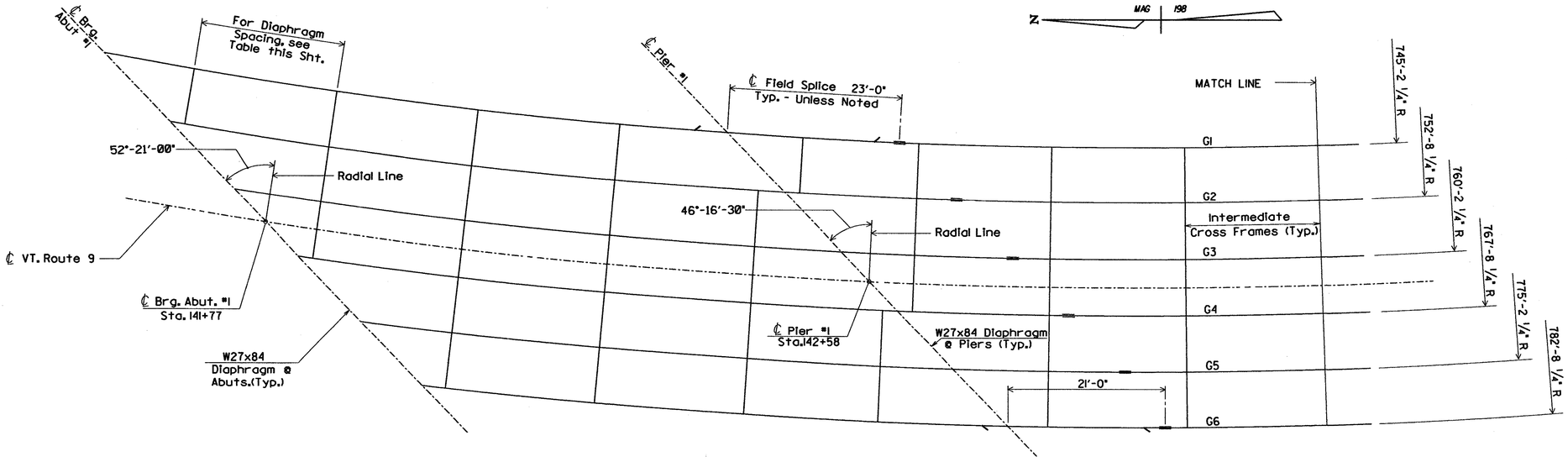

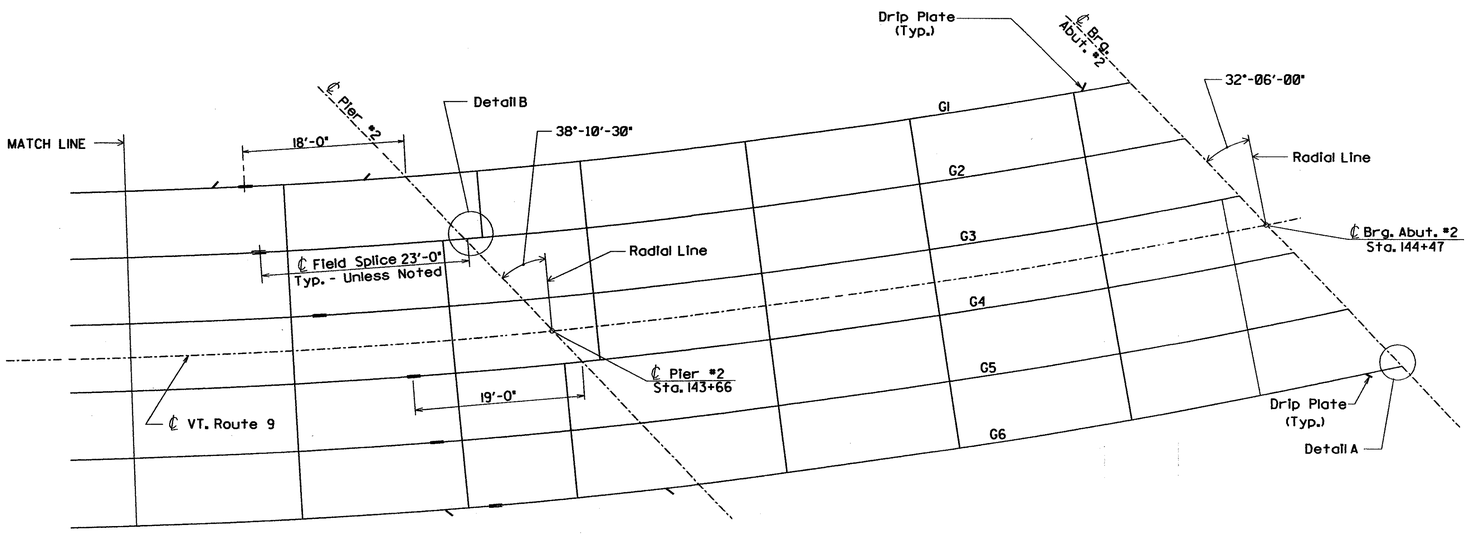

FRAMING PLAN
SCALE 1/8" = 1'-0
1 0 2 4 6 8

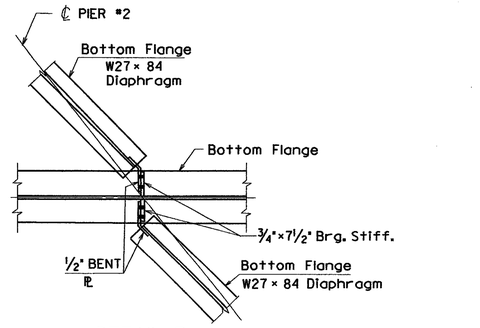

DETAIL B
Scale: 3/4" = 1'-0"

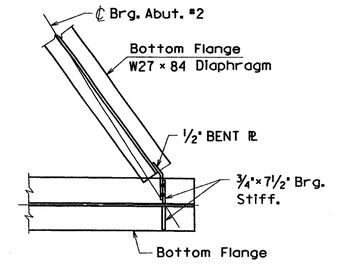

DETAIL A
Scale: 3/4" = 1'-0"

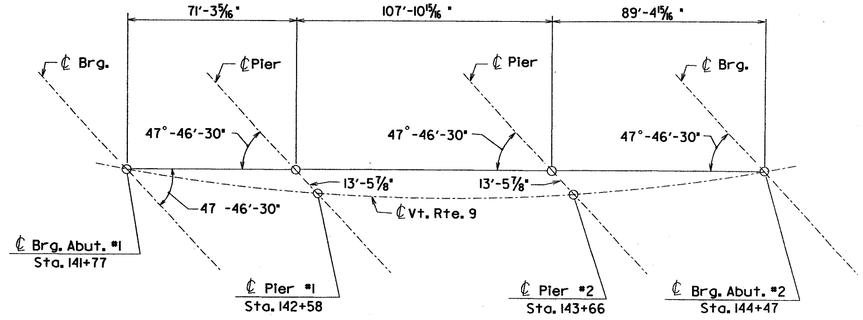

MAJOR CHORD LAYOUT
Scale: 1" = 30'-0"

	← ℄ Brg. Abut. #1				℄ Pier #1 →		DIAPHRAGM SPACING							← ℄ Pier #2				℄ Brg. Abut. #2 →	
G1	12'-2 7/16"	19'-3 3/16"	19'-0 1/2"	19'-0 1/2"	14'-4 7/8"	——	10'-1 7/16"	15'-6"	17'-9 3/16"	17'-9 3/16"	17'-9 3/16"	17'-9 3/16"	13'-8 1/4"	——	8'-0 1/2"	11'-7 3/8"	18'-7 11/16"	18'-7 11/16"	18'-7 11/16"	6'-5 3/4"
G2	2'-0"	19'-5 3/4"	19'-2 15/16"	19'-2 15/16"	19'-2 15/16"	3'-6 1/2"	2'-0"	15'-7 7/8"	17'-11 3/8"	17'-11 3/8"	17'-11 3/8"	17'-11 3/8"	17'-11 3/8"	2'-0"	2'-0"	11'-8 1/16"	18'-9 5/16"	18'-9 5/16"	18'-9 5/16"	11'-4 7/8"
G3	11'-7 7/8"	19'-5 1/8"	19'-5 1/8"	19'-5 1/8"	11'-7 7/16"	——	9'-9 7/16"	18'-1 1/2"	18'-1 1/2"	18'-1 1/2"	18'-1 1/2"	18'-1 1/2"	8'-0 1/2"	——	7'-10 5/16"	19'-0 3/16"	19'-0 3/16"	19'-0 3/16"	14'-3 3/4"	2'-0"
G4	2'-0"	19'-7 3/8"	19'-7 3/8"	19'-7 3/8"	17'-7 3/8"	2'-0"	2'-0"	18'-3 5/8"	18'-3 5/8"	18'-3 5/8"	18'-3 5/8"	18'-3 5/8"	12'-0 9/16"	2'-0"	2'-0"	19'-2 7/16"	19'-2 7/16"	19'-2 7/16"	14'-5 7/16"	6'-9"
G5	12'-3 11/16"	19'-9 1/16"	19'-9 11/16"	17'-9 7/16"	9'-8 7/8"	——	12'-9 3/8"	18'-5 15/16"	18'-5 15/16"	18'-5 15/16"	18'-5 15/16"	12'-2"	7'-10 1/4"	——	15'-6 7/8"	19'-4 11/16"	19'-4 11/16"	14'-7 7/16"	11'-5 3/4"	——
G6	3'-1 5/8"	20'-0"	20'-0"	17'-11 9/16"	17'-4 7/8"	——	5'-4"	18'-7 15/16"	18'-7 15/16"	18'-7 15/16"	18'-7 15/16"	12'-3 3/8"	13'-8 1/16"	——	9'-11 5/16"	19'-6 5/16"	19'-6 5/16"	14'-8 1/16"	16'-2 5/16"	——

NOTES

1. For Diaphragm & Cross Frame Details, see sheet BR404.
2. For Drip Plate Details, see sheet BR413.

STATE OF VERMONT
AGENCY OF TRANSPORTATION

Town Of SEARSBURG	Bridge No. 25 B
	Log Sta.
Highway No. VT. ROUTE 9	Surv. Sta. 143+11
VT. ROUTE 9 OVER DEERFIELD RIVER	
FRAMING PLAN	
Designed By R.P.J.	Drawn By C.M.K.
Checked By W.J.G. Date 11-85	Bridge Design Supervisor W.T.S. Date 11-85
PROJECT SEARSBURG - WILMINGTON	PROJECT NO. FOIO-1(18)
McFARLAND - JOHNSON ENGINEERS, INC.	I.G.C. Info.
	Bridge Sheet No. BR406 Sheet 208 of 435

FILE NAME = u:\9755\WSTN\15\BRDG25B\25b_frmgpln.plt
DATE/TIME = 12/12/101
USER = 22225

PLOT SCALE = 1:8

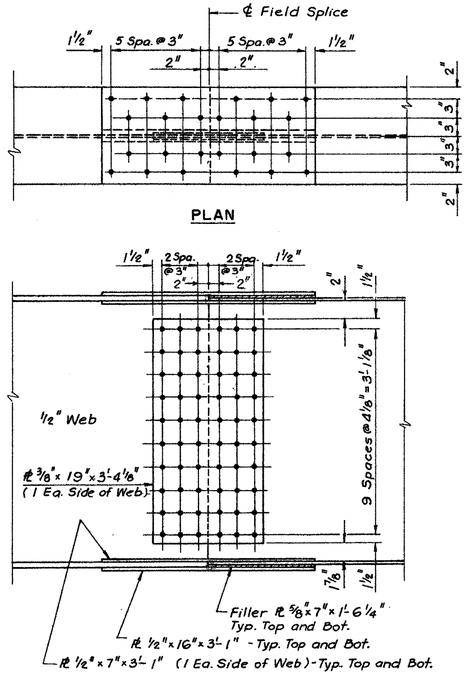

FIELD SPLICE
Scale : 1" = 1'-0"

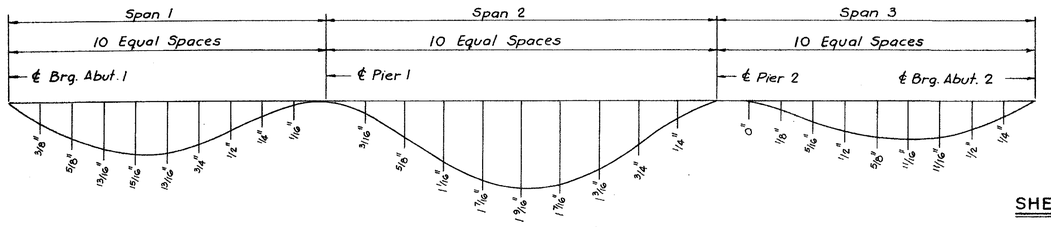

DEFLECTION DIAGRAM
Not to scale

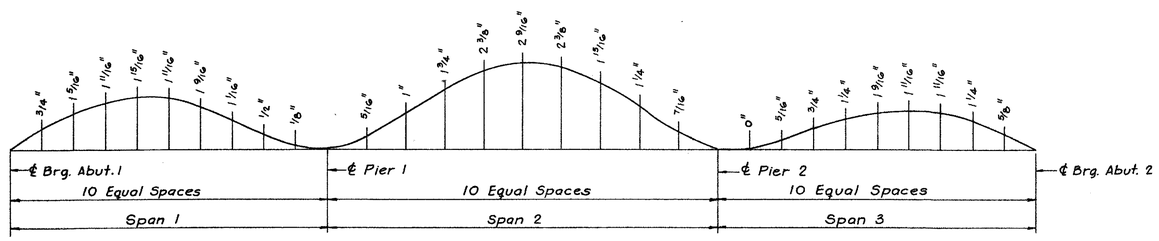

CAMBER DIAGRAM
Not to scale

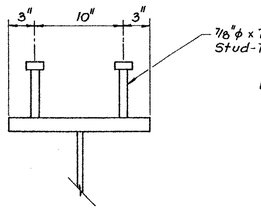

SHEAR CONNECTOR DETAIL
Scale : 1½" = 1'-0"

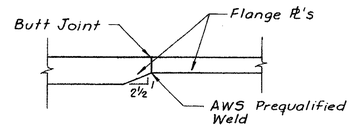

DETAIL A
Scale : 3" = 1'-0"

NOTES

1. For Framing Plan, see Sheet BR406..
2. For Typical Section, see Sheet BR404. .
3. All Flange and Web plates require Charpy V-Notch Test, as specified in Subsection 714.03.
4. Ends of girders and bearing stiffeners at Abutment and Piers shall be vertical in the erected position.
5. All girders shall be cambered as shown on the Camber Diagram.
6. All field connections shall be made with ⅞" H.S. bolts in 15/16" ϕ holes.
7. Girder splices shall be shop fitted to insure the desired camber and matching of members is obtained.
8. Girder splices shall be paid for in accordance with unit price bid for Structural Steel.
9. Shear Connectors shall be paid for in accordance with unit price bid for Item 508.15.
10. All Structural Steel shall be AASHTO M270 GR50W.
11. ALL STRUCTURAL STEEL WITHIN 10 FEET OF END OF GIRDER SHALL BE COATED WITH A PROTECTIVE PAINT SYSTEM, WITH THE FINAL COAT TO BE DARK BROWN (COLOR CHIP # 20059) TO BLEND WITH THE WEATHERING STEEL. THE COST OF PAINTING SHALL BE PAID UNDER ITEM 513.25. "STRUCTURAL PAINTING SHOP APPLIED".
12. IN AREAS OF UNPAINTED STEEL, CONTACT SURFACES OF BOLTED CONNECTIONS SHALL BE BLAST CLEANED IF RUSTED BEFORE CONNECTION IS MADE. IN AREAS OF PAINTED STEEL, PRIMER SHALL REMAIN ON THE SURFACES OF STEEL CONNECTION CONTACTS.

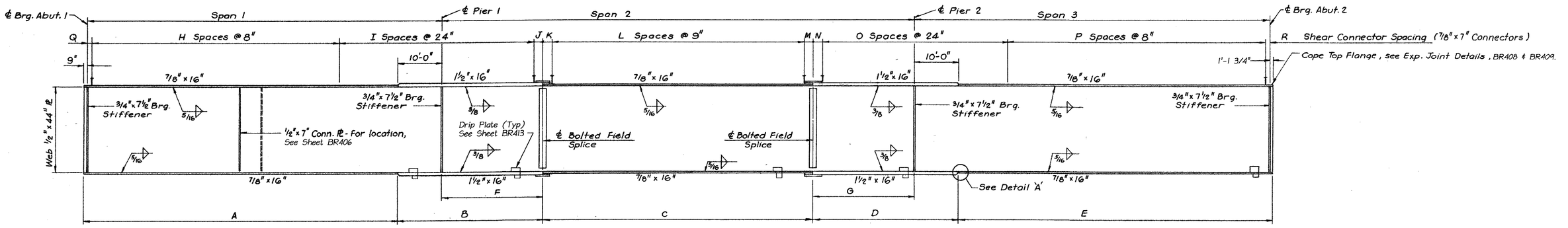

GIRDER ELEVATION
Not to scale

MARK	SPAN 1	SPAN 2	SPAN 3	℄ GIRDER RADIUS	A	B	C	D	E	F	G	H	I	J	K	L	M	N	O	P	Q	R
G1	83'-11 3/4"	110'-4 7/16"	82'-0 11/16"	745'-2 1/4"	74'-8 3/4"	33'-0"	69'-4 7/16"	28'-0"	73'-2 7/16"	23'-0"	18'-0"	90	22	2'-0"	2'-0 3/4"	87	2'-0 11/16"	2'-0"	20	86	0'-11 3/4"	0'-8 11/16"
G2	82'-8 11/16"	109'-4 3/4"	81'-7 1/2"	752'-8 1/4"	73'-5 11/16"	33'-0"	63'-4 3/4"	33'-0"	72'-9 1/4"	23'-0"	23'-0"	88	22	2'-0"	2'-0 7/8"	79	2'-0 7/8"	2'-0"	22	87	1'-0 11/16"	0'-7 1/2"
G3	81'-6 1/16"	108'-5 7/16"	81'-2 1/2"	760'-2 1/4"	72'-3 11/16"	33'-0"	62'-5 11/16"	33'-0"	72'-4 1/4"	23'-0"	23'-0"	86	22	2'-0"	2'-4 1/4"	77	2'-4 3 11/16"	2'-0"	22	86	1'-2 11/16"	0'-10 1/2"
G4	80'-5 1/2"	107'-6 11/16"	80'-9 3/4"	767'-8 1/4"	71'-2 1/2"	33'-0"	65'-6 11/16"	29'-0"	71'-11 1/2"	23'-0"	19'-0"	85	22	2'-0"	2'-0 3/8"	82	2'-0 5/16"	2'-0"	20	85	0'-9 1/2"	1'-1 3/4"
G5	79'-5 3/8"	106'-8 7/8"	80'-5 1/8"	775'-2 1/4"	70'-2 3/8"	33'-0"	60'-8 7/8"	33'-0"	71'-6 7/8"	23'-0"	23'-0"	83	22	2'-0"	2'-2 15/16"	75	2'-2 15/16"	2'-0"	21	88	1'-1 3/8"	0'-9 1/8"
G6	78'-6 1/16"	105'-11 3/16"	80'-0 13/16"	782'-8 1/4"	69'-3 1/16"	31'-0"	61'-11 3/16"	33'-0"	71'-2 9/16"	21'-0"	23'-0"	79	22	2'-0"	2'-1 7/16"	78	2'-1 7/16"	2'-0"	22	84	0'-10 1/16"	1'-0 13/16"

McFARLAND - JOHNSON ENGINEERS, INC.

STATE OF VERMONT
AGENCY OF TRANSPORTATION

Town Of SEARSBURG	Bridge No. 25 B
Highway No. VT. ROUTE 9	Log Sta. / Surv. Sta. 193+11
VT. ROUTE 9 OVER DEERFIELD RIVER	
GIRDER DETAILS	
Designed By RPJ	Drawn By JJM
Checked By RPJ Date 11-85	Bridge Design Supervisor WTS Date 2/86
PROJECT SEARSBURG-WILMINGTON	PROJECT NO. F 010-1(18)
L.G.C. Info.	
Bridge Sheet No. BR407	Sheet 209 of 435

M.J. Job No. 83-3302.0
M.J. Br No. 2
M.J. Sht. No. 55
BRUNING 62165

BR-6

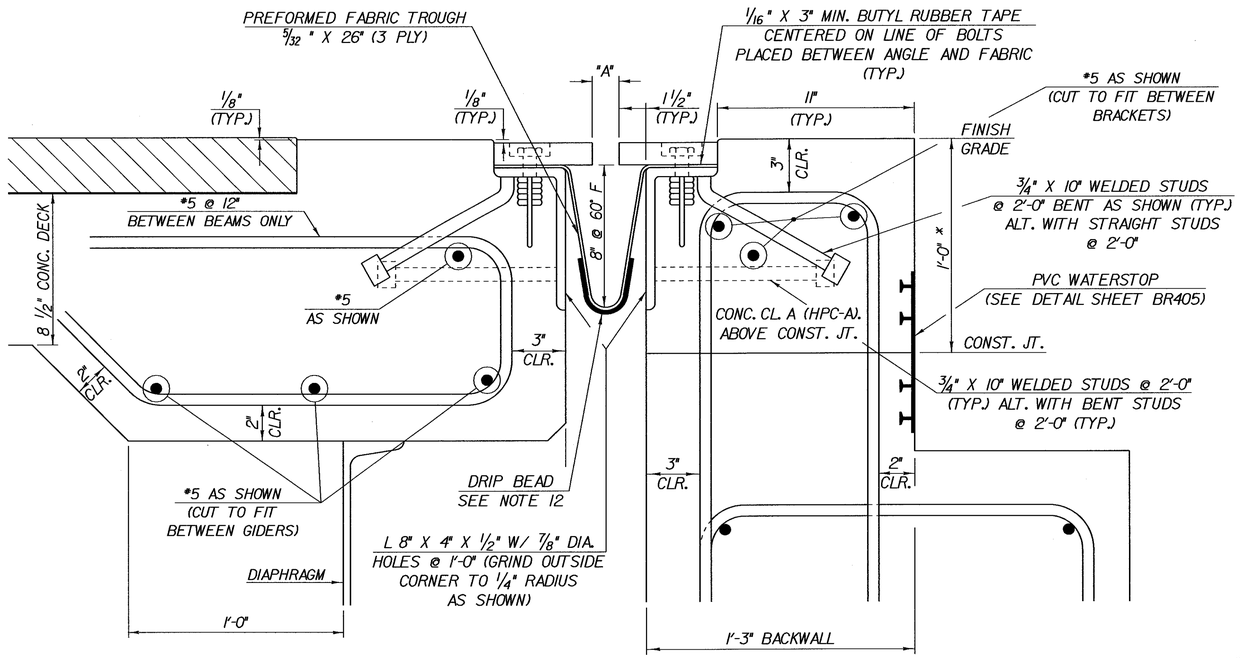

TYPICAL SECTION BETWEEN BEAMS

SCALE: 3" = 1'-0" (NORMAL TO ℄ BEARING)

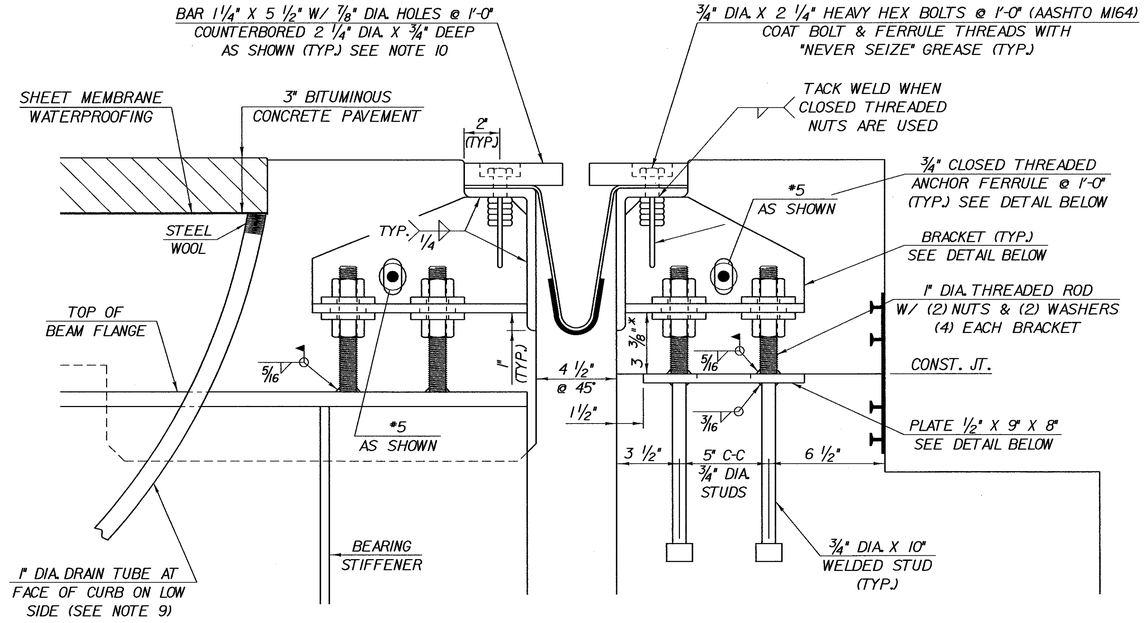

TYPICAL SECTION AT BEAMS

SCALE: 3" = 1'-0" (NORMAL TO ℄ BEARING)

* THESE DIMENSIONS ARE THEORETICAL AND MAY CHANGE DEPENDING UPON THE OUTCOME OF THE BEAM PROFILES.

1. DETAILS ON THIS SHEET ARE FOR ITEM 516.10 "BRIDGE EXPANSION JOINT".
2. PREFORMED FABRIC MATERIAL SHALL BE CONTINUOUS AND SHALL CONFORM TO SUBSECTION 707.07.
3. BUTYL RUBBER TAPE SHALL CONFORM TO AASHTO SPECIFICATION M-198, TYPE B.
4. THE FINAL FINISH OF THE EXPANSION DEVICE SHALL BE COVERED DURING THE PLACING OF BRIDGE DECK CONCRETE.
5. ALL STEEL COMPONENTS SHALL BE AASHTO M270 GRADE 36 GALVANIZED OR METALIZED AS PER SUBSECTION 516.04 AS MODIFIED BY GENERAL SPECIAL PROVISIONS UNLESS OTHERWISE SPECIFIED.
6. THE ITEM "BRIDGE EXPANSION JOINT" SHALL INCLUDE THE FABRICATION AND ERECTION OF THE COMPLETE JOINT ASSEMBLY INCLUDING ALL STEEL PLATES, BRACKETS, ANGLES, WELDED STUDS OR RODS, PREFORMED FABRIC DRAIN TROUGH MATERIAL AND PLASTIC DRAIN TUBES, BUTYL RUBBER TAPE AND ANY OTHER MISCELLANEOUS MATERIAL NECESSARY TO INSTALL JOINT.
7. THE 8" X 4" X 1/2" ANGLES SHALL BE FURNISHED AS ONE CONTINUOUS PIECE. THE 1 1/4" X 5 1/2" BARS EACH SIDE OF THE JOINT SHALL BE PROVIDED IN TWO EQUAL LENGTHS.
8. COAT CONCRETE CONTACT SURFACES WITH EPOXY BONDING COMPOUND MEETING THE REQUIREMENTS OF SUBSECTION 719.02. PAYMENT SHALL BE INCLUDED IN THE UNIT PRICE BID FOR ITEM 516.10 "BRIDGE EXPANSION JOINT".
9. A 1" DIAMETER PLASTIC DRAIN TUBE (PER STD. SPEC. 740.01) SHALL BE INSTALLED AS SHOWN AT THE FACE OF CURB. THE UPPER END IS TO BE PLUGGED WITH STEEL WOOL AND THE LOWER END IS TO EXTEND BELOW THE BOTTOM OF THE ADJACENT BEAM. THE DRAIN TUBES SHALL BE FASTENED TO THE BEAMS USING A METHOD APPROVED BY THE ENGINEER.
10. FILL COUNTERBORED HOLES WITH HOT POURED JOINT SEALER (STD. SPEC. 707.04 AS MODIFIED BY THE GENERAL SPECIAL PROVISIONS) AFTER BOLT INSTALLATION. PAYMENT FOR THE WORK SHALL BE SUBSIDIARY TO ITEM 516.10.
11. PAYMENT FOR WATERSTOP SHALL BE SUBSIDIARY TO ITEM 501.25, "CONCRETE CLASS B (HPC-B)".
12. A DRIP BEAD OF 1/4" X 7" STRIP OF PREFORMED MATERIAL SHALL BE CEMENTED TO THE BOTTOM OF THE FABRIC TROUGH USING AN ADHESIVE APPROVED BY THE MANUFACTURER. THE DRIP BEAD SHALL BE APPLIED 1" FROM THE DOWNSPOUT END OF THE TROUGH.
13. FABRIC TROUGH SHALL BE THOROUGHLY CLEANED AND FLUSHED AFTER PAVING OPERATION.
14. THE EXPANSION JOINT SHALL BE SHOP ASSEMBLED AND SHIPPED AS ONE UNIT.

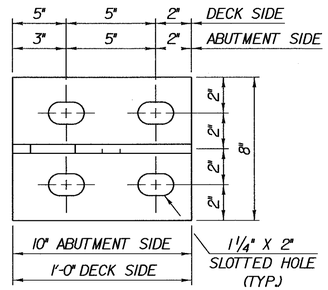

BRACKET PLAN

SCALE: 3" = 1'-0"

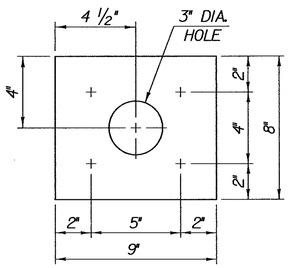

PLATE PLAN

SCALE: 3" = 1'-0"

TEMP	"A" DIST
0° F	2 1/16"
15° F	1 7/8"
30° F	1 11/16"
45° F	1 1/2"
60° F	1 5/16"
75° F	1 1/8"
90° F	15/16"
105° F	3/4"

"A" IS THE SETTING BEFORE DEAD LOADS ARE IN PLACE.

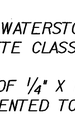

DAYTON/RICHMOND LF, 3/4" DIA. CLOSED FERRULE OR EQUIVALENT

ANCHOR FERRULE DETAIL

SCALE: 3" = 1'-0"

NOTE:
CLOSED THREADED FERRULE NUTS WITHOUT ANCHOR LOOPS MAY BE USED.

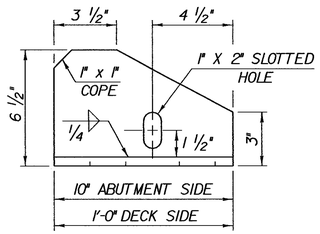

BRACKET ELEVATION

SCALE: 3" = 1'-0"

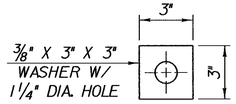

WASHER FOR BRACKET

SCALE: 3" = 1'-0"

ALL PLATES 1/2"

STATE OF VERMONT
AGENCY OF TRANSPORTATION

Town Of SEARSBURG-WILMINGTON	Bridge No. 25B
Highway No. VT. ROUTE 9	Log Sta. / Surv. Sta.

VT. ROUTE 9 OVER THE DEERFIELD RIVER

EXPANSION JOINT DETAILS - BR 25B

Designed By G. ROY	Drawn By G. ROY
Checked By R. WHITCOMB Date 2/02	Bridge Design Supervisor R. R. WHITCOMB Date 2/02
PROJECT SEARSBURG-WILMINGTON	PROJECT NO. NHF 010 - 1 (18)

L.G.C. Info. 78d096\Structures\sd096exp.dgn sd096exp.j

Bridge Sheet No. BR408A Sheet 210 of 435

PLOTTED 28-FEB-2002

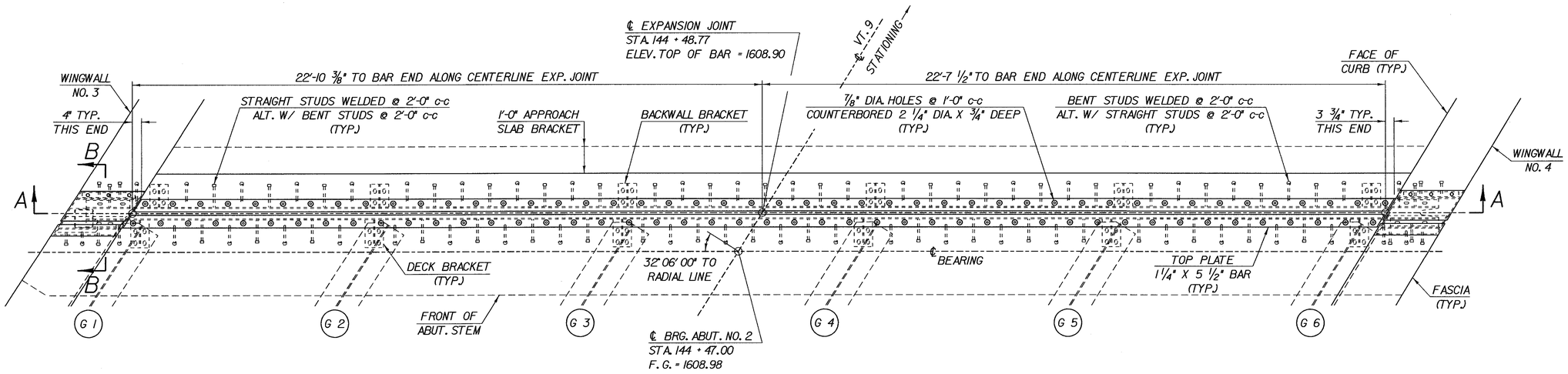

EXPANSION JOINT PLAN

SCALE: 1/2" = 1'-0"

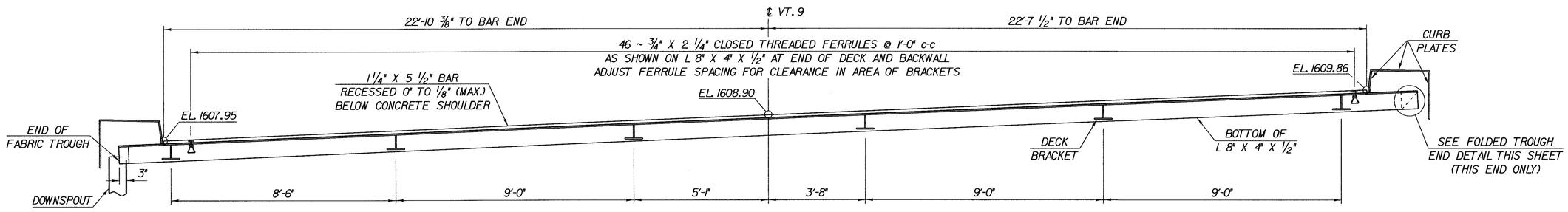

SECTION A - A

SCALE: 1/2" = 1'-0"

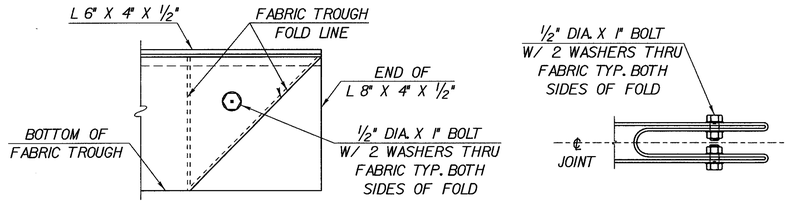

ELEVATION PLAN

FOLDED TROUGH END DETAILS

NOT TO SCALE

STATE OF VERMONT
AGENCY OF TRANSPORTATION

Town Of SEARSBURG-WILMINGTON	Bridge No. 25B
Highway No. VT. ROUTE 9	Log Sta. / Surv. Sta.

VT. ROUTE 9 OVER THE DEERFIELD RIVER

EXPANSION JOINT PLAN - BR 25B

Designed By G. ROY	Drawn By G. ROY
Checked By R. WHITCOMB Date 2/02	Bridge Design Supervisor R. R. WHITCOMB Date 2/02
PROJECT SEARSBURG-WILMINGTON	PROJECT NO. NHF 010 - 1 (18)
I.G.C. Info. 78d096\Structures\sd096exp.dgn	sd096ejpj
Bridge Sheet No. BR4DBB	Sheet 211 of 435

PLOTTED 28-FEB-2002

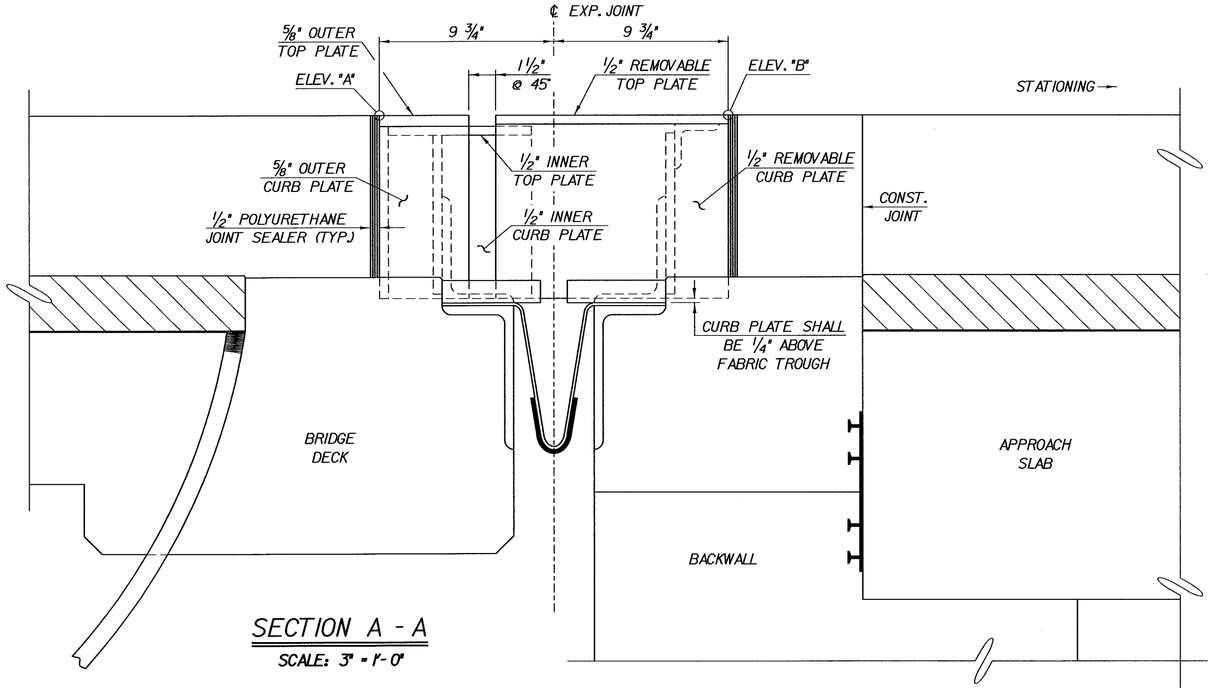

SECTION A - A

SCALE: 3" = 1'-0"

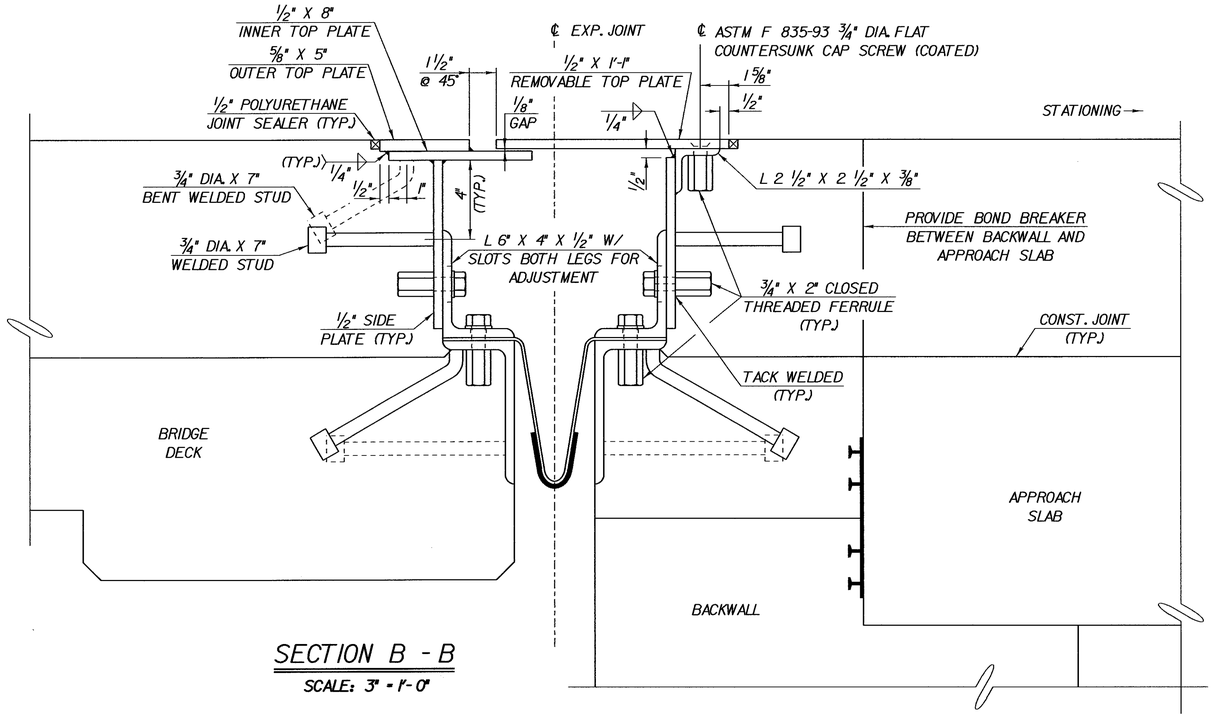

SECTION B - B

SCALE: 3" = 1'-0"

CURB ELEVATION TABLE		
WINGWALL	"A"	"B"
NO. 3	1608.75	1608.69
NO. 4	1610.66	1610.60

STATE OF VERMONT
AGENCY OF TRANSPORTATION

Town Of SEARSBURG-WILMINGTON	Bridge No. 25B
Highway No. VT. ROUTE 9	Log Sta. / Surv. Sta.

VT. ROUTE 9 OVER THE DEERFIELD RIVER

CURB PLATE DETAILS - BR 25B

Designed By G. ROY	Drawn By G. ROY
Checked By R. WHITCOMB Date 2/02	Bridge Design Supervisor R. R. WHITCOMB Date 2/02
PROJECT SEARSBURG-WILMINGTON	PROJECT NO. NHF 010 - 1 (18)
I.G.C. Info. 78d096\Structures\sd096exp.dgn	sd096cpdJ
Bridge Sheet No. BR40BC	Sheet 212 of 435

PLOTTED 28-FEB-2002

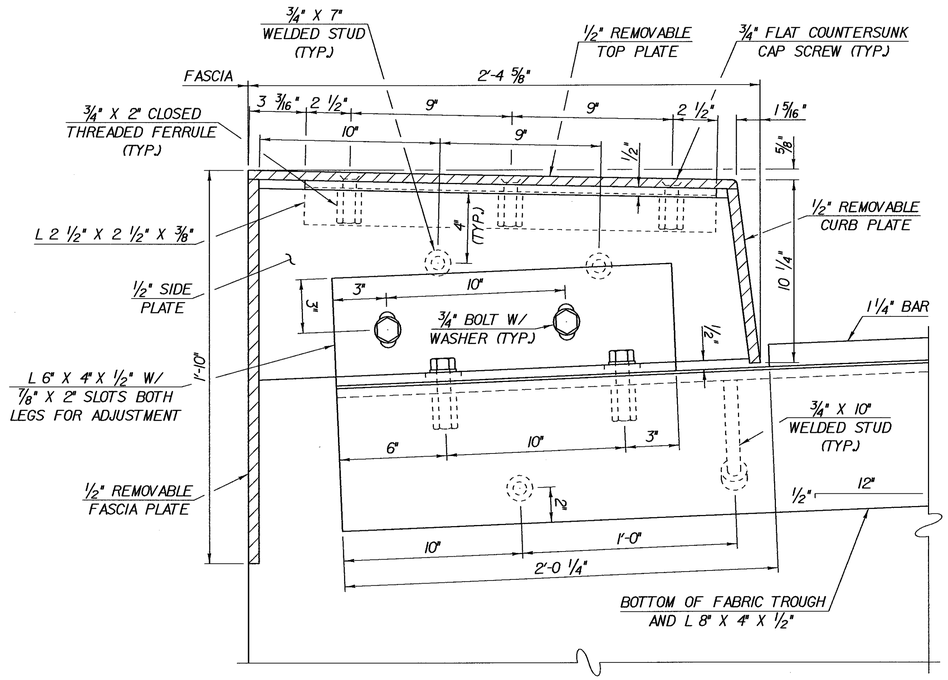

VIEW A - A

SCALE: 3" = 1'-0"

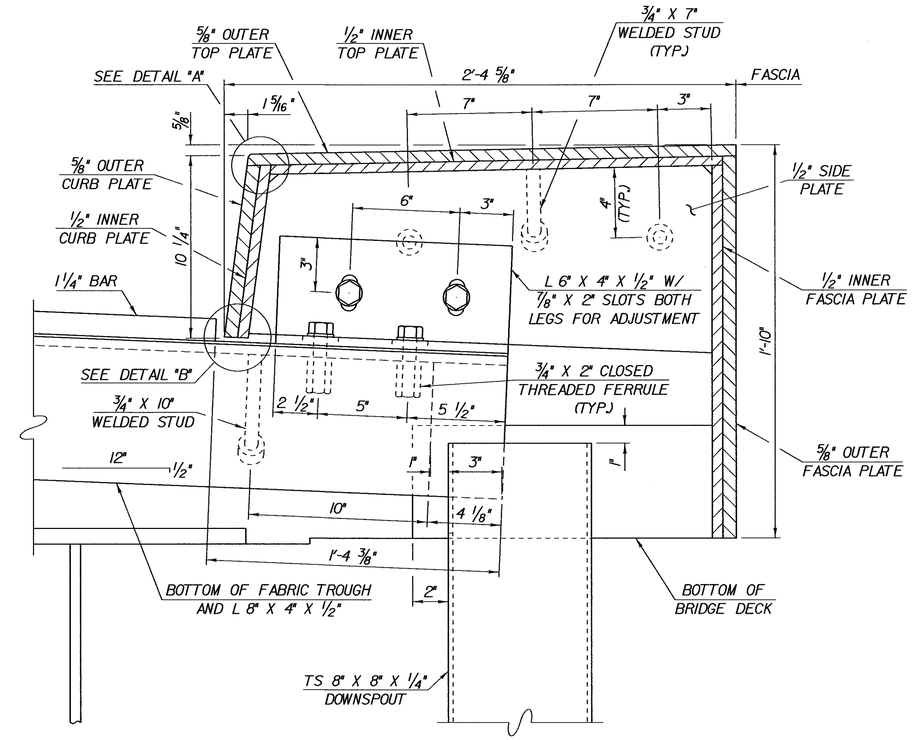

VIEW B - B

SCALE: 3" = 1'-0"

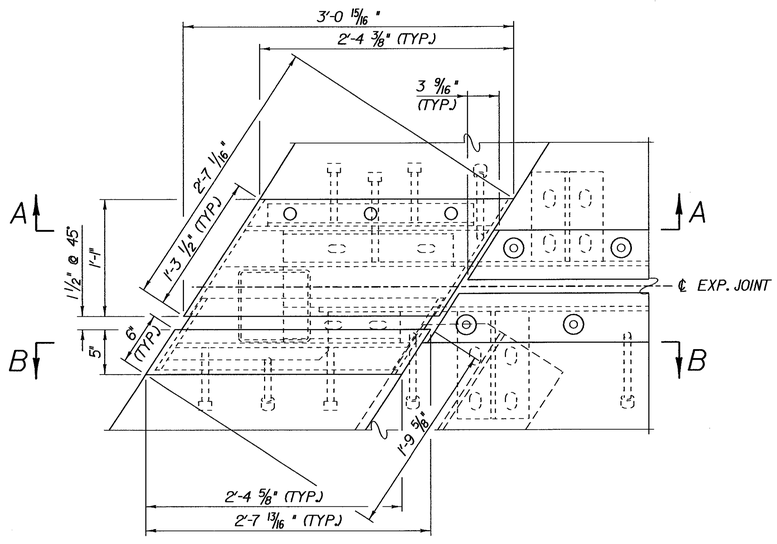

LEFT CURB PLAN @ EXPANSION JOINT

SCALE: 1 1/2" = 1'-0"

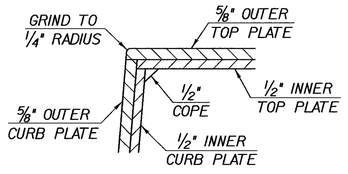

DETAIL "A"

SCALE: 3" = 1'-0"

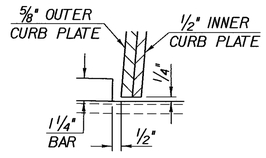

DETAIL "B"

SCALE: 3" = 1'-0"

STATE OF VERMONT
AGENCY OF TRANSPORTATION

Town Of SEARSBURG-WILMINGTON	Bridge No. 25B
Highway No. VT. ROUTE 9	Log Sta. / Surv. Sta.

VT. ROUTE 9 OVER THE DEERFIELD RIVER

LEFT CURB PLATE DETAILS - BR 25B

Designed By G. ROY	Drawn By G. ROY
Checked By R. WHITCOMB Date 2/02	Bridge Design Supervisor R. R. WHITCOMB Date 2/02
PROJECT SEARSBURG-WILMINGTON	PROJECT NO. NHF 010 - 1 (18)
I.C.C. Info. 78d096\Structures\sd096exp.dgn	sd096lcdJ
Bridge Sheet No. BR 409A	Sheet 213 of 435

PLOTTED 28-FEB-2002

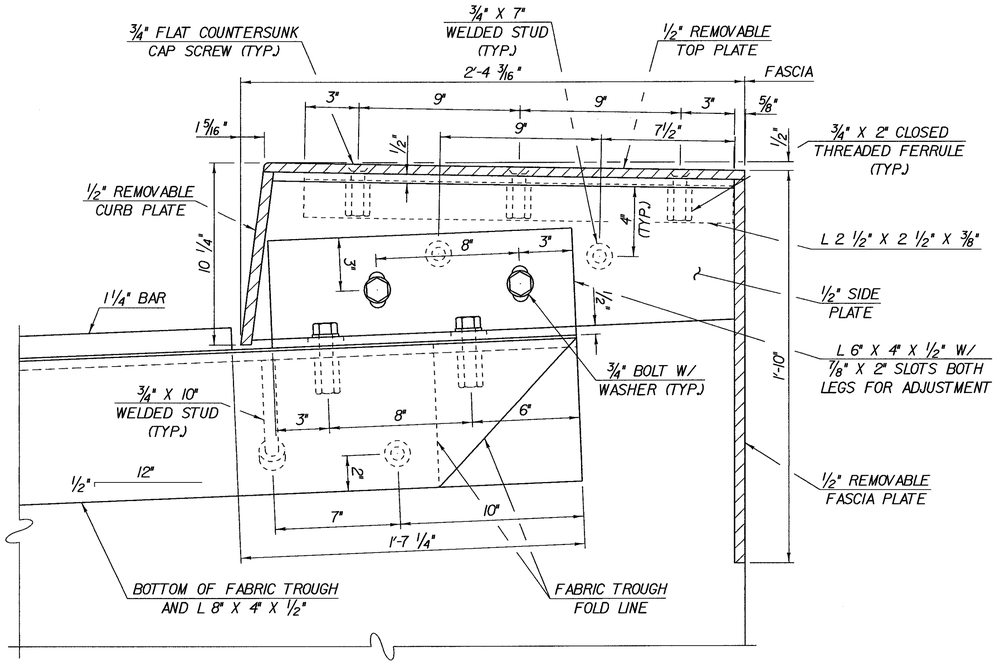

VIEW C - C

SCALE: 3" = 1'-0"

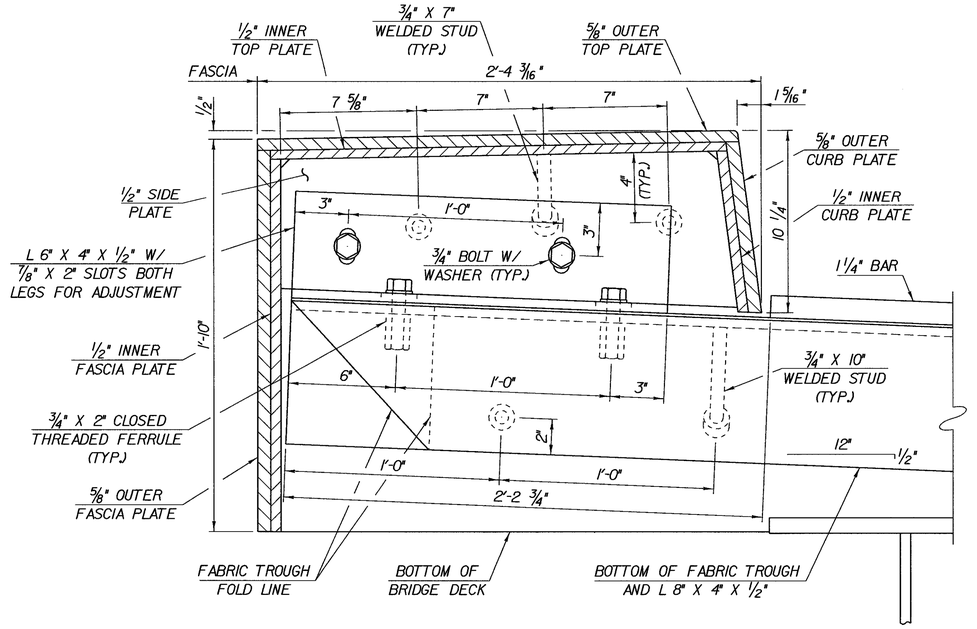

VIEW D - D

SCALE: 3" = 1'-0"

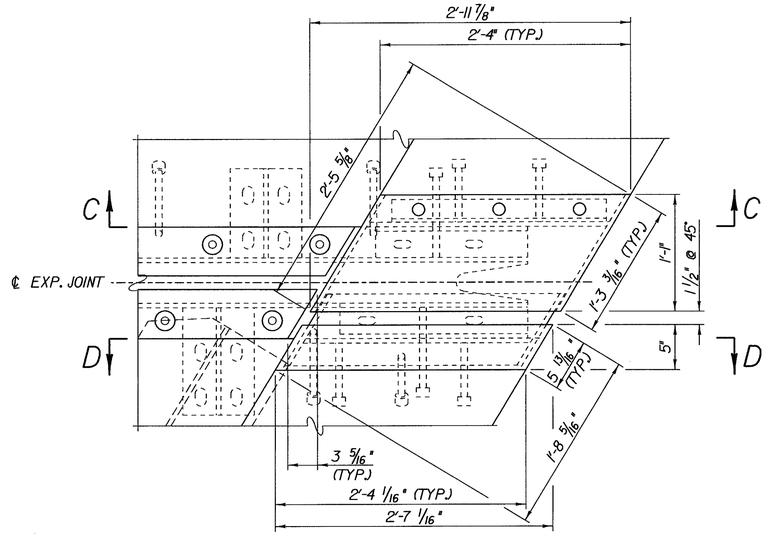

LEFT CURB PLAN @ EXPANSION JOINT

SCALE: 1 1/2" = 1'-0"

STATE OF VERMONT
AGENCY OF TRANSPORTATION

Town Of SEARSBURG-WILMINGTON	Bridge No. 25B
Highway No. VT. ROUTE 9	Log Sta. / Surv. Sta.
VT. ROUTE 9 OVER THE DEERFIELD RIVER	
RIGHT CURB PLATE DETAILS - BR 25B	
Designed By G. ROY	Drawn By G. ROY
Checked By R. WHITCOMB Date 2/02	Bridge Design Supervisor R. R. WHITCOMB Date 2/02
PROJECT SEARSBURG-WILMINGTON	PROJECT NO. NHF 010 - 1 (18)
I.G.C. Info. 78d096\Structures\sd096exp.dgn sd096rcdJ	
Bridge Sheet No. BR.409B	Sheet 214 of 435

PLOTTED 28-FEB-2002

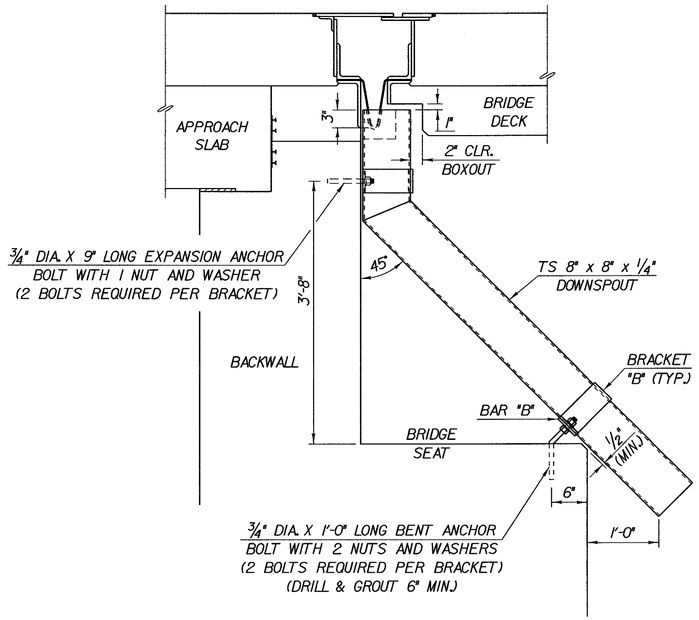

DOWNSPOUT ELEVATION

SCALE: 1" = 1'-0"

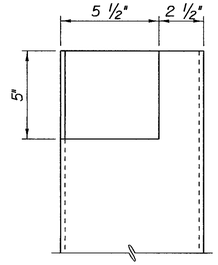

DOWNSPOUT CUTOUT FOR TROUGH

SCALE: 3" = 1'-0"

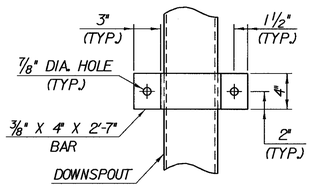

ELEVATION VIEW OF BRACKET "B"

SCALE: 1 1/2" = 1'-0"

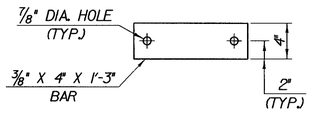

ELEVATION VIEW OF BAR "B"

SCALE: 1 1/2" = 1'-0"

DOWNSPOUT NOTES

1. HOLLOW STRUCTURAL STEEL TUBING SHALL CONFORM TO A500 OR A501.
2. ALL PLATES, BARS, AND ANGLES SHALL CONFORM TO AASHTO M270 GR. 36.
3. DOWNSPOUTS SHALL BE GALVANIZED IN ACCORDANCE WITH ASTM A123 AFTER FABRICATION.
4. ALL BOLTS AND RELATED HARDWARE SHALL BE ASTM A307 AND SHALL BE GALVANIZED IN ACCORDANCE WITH ASTM A153 (AASHTO M232).
5. AREAS WHERE THE GALVANIZING HAS BEEN REMOVED FROM THE DOWNSPOUT EITHER BY CUTTING, BURNING, WELDING, PLACING, OR ANY OTHER MEANS SHALL BE REPAIRED IN CONFORMANCE WITH SUPPLEMENTAL SPECIFICATION 513.
6. ALL MATERIALS AND INSTALLATION COSTS FOR THE DOWNSPOUTS, INCLUDING STEEL TUBING, RELATED HARDWARE, AND ANCHOR BOLTS SHALL BE PAID FOR UNDER ITEM 506.55 "STRUCTURAL STEEL (PLATE GIRDER)".

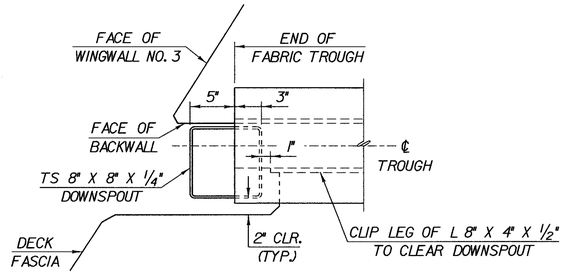

BOTTOM OF DECK TO BE BOXED OUT AS SHOWN TO ALLOW DOWNSPOUT TO COME UP UNDERNEATH THE DRAIN TROUGH. DECK REINFORCING STEEL TO BE CUT AS REQUIRED TO MAINTAIN 3" CLEARANCE FROM BOXOUT

PLAN VIEW OF DECK BOXOUT FOR DOWNSPOUT

SCALE: 1 1/2" = 1'-0"

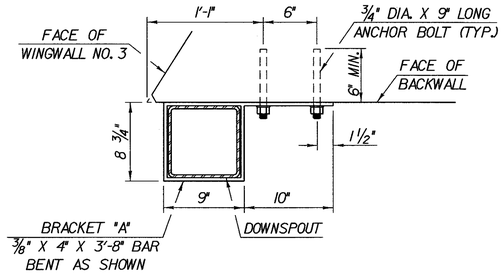

DETAILS FOR ATTACHING DOWNSPOUT TO BACKWALL

SCALE: 1 1/2" = 1'-0"

STATE OF VERMONT
AGENCY OF TRANSPORTATION

Town Of SEARSBURG-WILMINGTON	Bridge No. 25B
Highway No. VT. ROUTE 9	Log Sta. / Surv. Sta.
VT. ROUTE 9 OVER THE DEERFIELD RIVER	
DOWNSPOUT DETAILS - BR 25B	
Designed By G. ROY	Drawn By G. ROY
Checked By R. WHITCOMB Date 2/02	Bridge Design Supervisor R. R. WHITCOMB Date 2/02
PROJECT SEARSBURG-WILMINGTON	PROJECT NO. NHF 010 - 1 (18)
L.G.C. Info. 78d096\Structures\sd096exp.dgn	sd096dsdJ
Bridge Sheet No. BR409C	Sheet 215 of 435

PLOTTED 28-FEB-2002

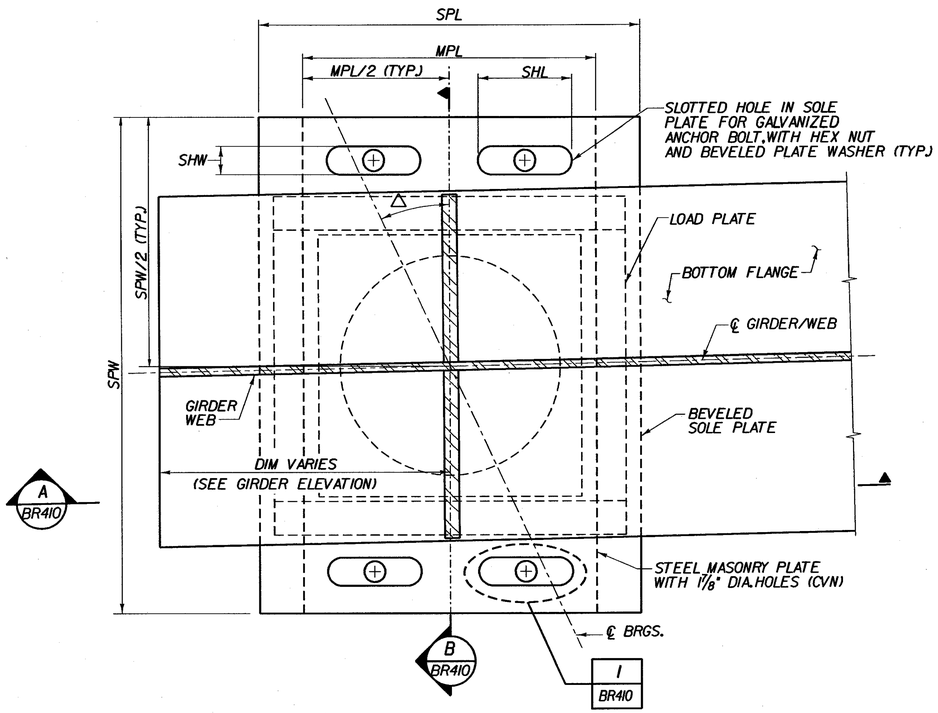

PLAN AT ABUTMENT
(NOT TO SCALE)

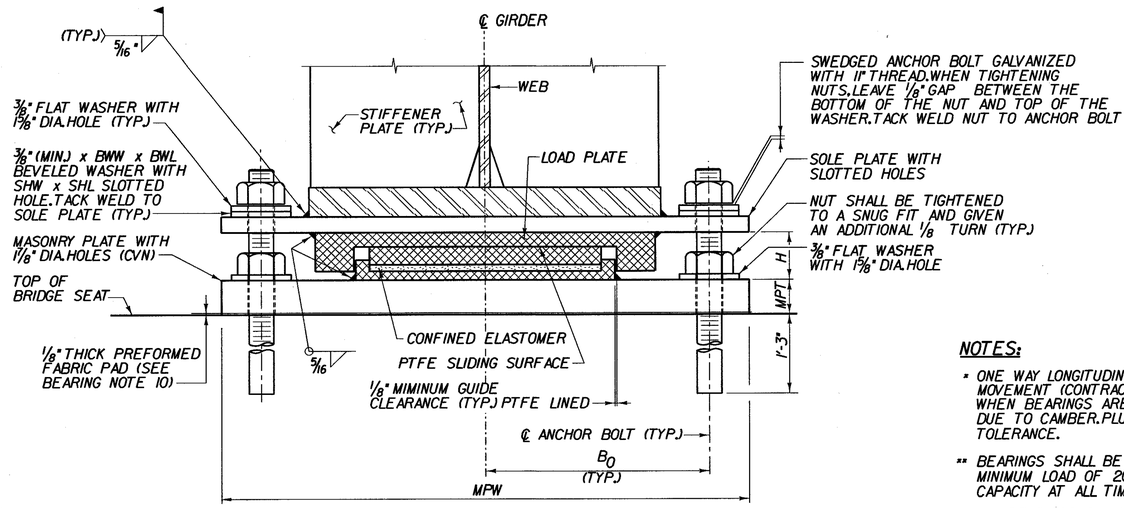

B BR410 EXPANSION BEARING
(NOT TO SCALE)

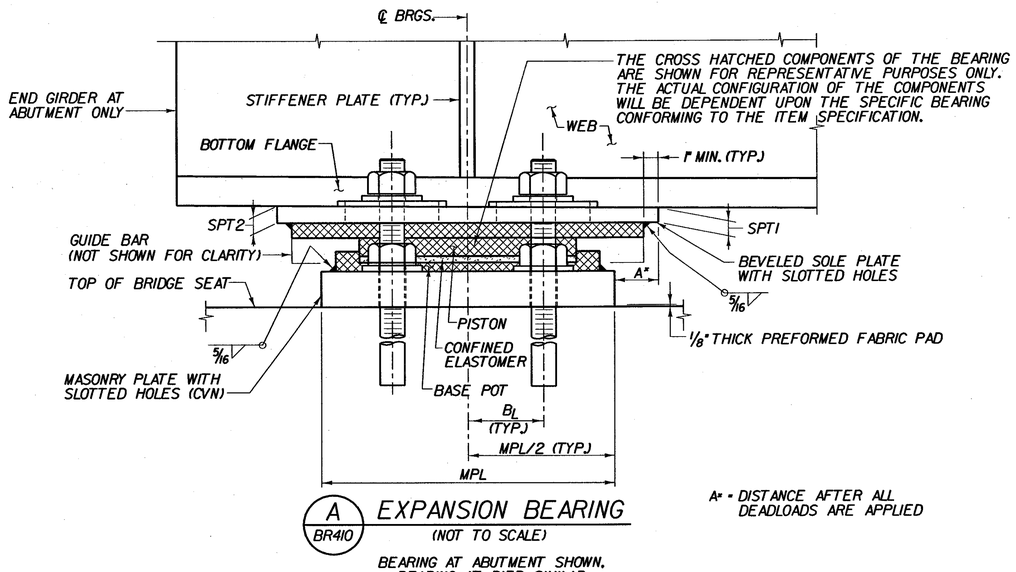

A BR410 EXPANSION BEARING
(NOT TO SCALE)

BEARING AT ABUTMENT SHOWN. BEARING AT PIER SIMILAR

A* = DISTANCE AFTER ALL DEADLOADS ARE APPLIED

BEARING DEVICE NOTES :

1. BEARING SHALL CONFORM TO REQUIREMENTS OF SECTION 531 AND SUBSECTION 531.04h (CONFINED ELASTOMER (POT) BEARING. COMPONENTS SHALL CONFORM TO DESIGN, FABRICATION AND MATERIAL REQUIREMENTS OF THE APPLICABLE SUBSECTIONS OF SECTION 731
2. BEARINGS SHALL BE PAID FOR UNDER ITEM 531.10 "BEARING DEVICE ASSEMBLY."
3. SHOP DRAWINGS CONFORMING TO SUBSECTION 531.03 SHALL BE SUBMITTED AND SHALL INCLUDE WELDING AND BONDING PROCEDURES. SHOP DRAWINGS SHALL ALSO INDICATE WHETHER BEARING COMPONENTS ARE TO BE GALVANIZED OR METALIZED. IF METALIZED IS USED, THE SHOP DRAWINGS SHALL DENOTE THE TYPE OF SEAL COATING THAT WILL BE PLACED ON THE METALIZING.
4. SOLE PLATES AND WASHERS ARE TO BE GALVANIZED OR METALIZED AS PER SUBSECTION 506.15.
5. THE WELD BETWEEN THE SOLE PLATE AND BOTTOM FLANGE SHALL BE SMAW 8018 (C3). AREAS OF GALVANIZING ON THE SOLE PLATE DESTROYED IN THE WELDING PROCESS SHALL BE PAINTED WITH A ZINC-RICH PAINT. REFER TO SUPPLEMENTAL SPECIFICATION 513.
6. THE CONCRETE SURFACE UNDER THE BEARING SHALL BE LEVEL.
7. ANCHOR BOLTS SHALL HAVE A 1'-3" MINIMUM EMBEDMENT INTO CONCRETE. ANCHOR BOLTS SHALL CONFORM TO ASTM A307
8. AN ALTERNATE BEARING CONFIGURATION MAY BE SUBMITTED FOR APPROVAL. THE ALTERNATE SUBMITTED SHALL BE DESIGNED AND CERTIFIED TO MEET THE DESIGN LOADS AND CRITERIA SHOWN BELOW AND SHALL MAINTAIN THE ANCHORAGE SYSTEM SHOWN.
9. IF AN ALTERNATE BEARING CONFIGURATION IS USED, BRIDGE SEAT ELEVATIONS SHALL BE ADJUSTED ACCORDINGLY.
10. THE 1/8" THICK PREFORMED FABRIC PAD BENEATH THE MASONRY PLATE SHALL HAVE THE SAME SIZE AND ANCHOR BOLT HOLE LAYOUT AS THE CORRESPONDING MASONRY PLATE.

NOTES:

* ONE WAY LONGITUDINAL MOVEMENT IS THE MAXIMUM MOVEMENT (CONTRACTION) OF THE SUPERSTRUCTURE WHEN BEARINGS ARE SET @ 45°F. PLUS ELONGATION DUE TO CAMBER. PLUS AN ADDITIONAL 1" FOR TOLERANCE.

** BEARINGS SHALL BE CAPABLE OF MAINTAINING A MINIMUM LOAD OF 20% OF MAXIMUM DESIGN CAPACITY AT ALL TIMES.

*** ALL BEARINGS SHALL BE CAPABLE OF RESISTING BOTH THEIR MAXIMUM HORIZONTAL AND VERTICAL DESIGN LOADS

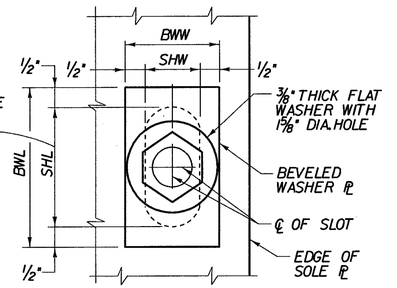

I BR410 TYPICAL WASHER PLATE DETAIL
(NOT TO SCALE)

STATE OF VERMONT
AGENCY OF TRANSPORTATION

Town Of SEARSBURG	Bridge No. 25B
Highway No. VT. RTE. 9	Log Sta. / Surv. Sta.
VT. RTE. 9 OVER DEERFIELD RIVER	
EXPANSION BEARING DETAILS - BR 25B	
Designed By D. VIENI	Drawn by B. DILLENBECK
Checked By M. OLSTAD Date 2/2002	Bridge Design Supervisor M. OLSTAD Date 2/2002
PROJECT SEARSBURG - WILMINGTON	PROJECT NO. NHF 010-1(18)
L.G.C. Info.	
Bridge Sheet No. BR410	Sheet 216 OF 435

CLOUGH, HARBOUR & ASSOCIATES LLP
ENGINEERS, SURVEYORS, PLANNERS & LANDSCAPE ARCHITECTS
11 WINNERS CIRCLE ALBANY, NEW YORK, 12205

FILE NAME = u:\9755\MS\TN\15\BR02259\258_exp_ber.dgn
DATE/TIME = 02/28/02
USER = 2225

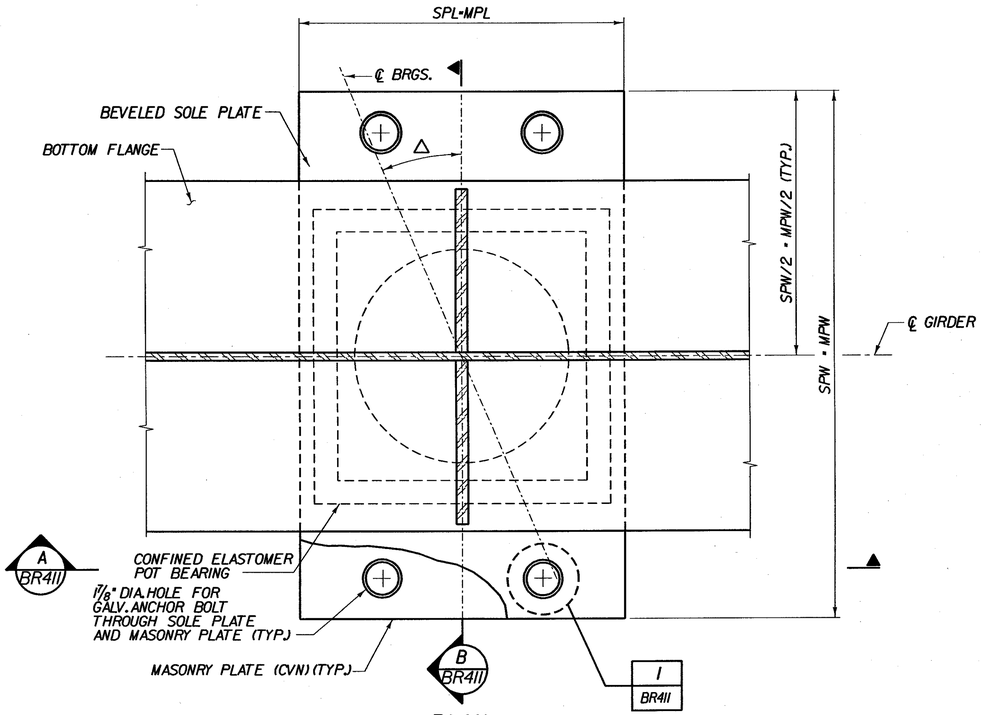

PLAN
(NOTE TO SCALE)

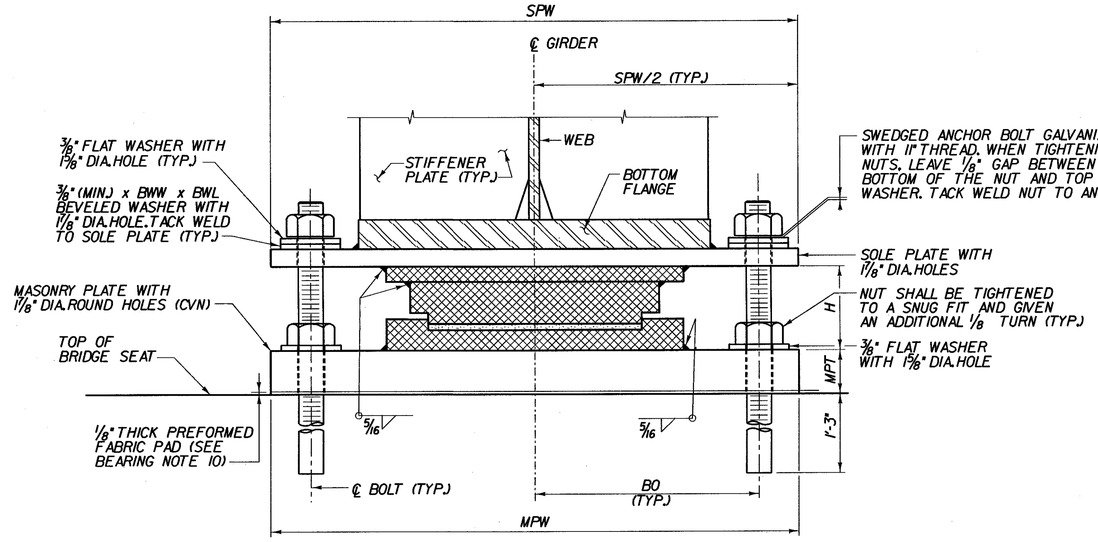

B BR411 FIXED BEARING
(NOT TO SCALE)

THE CROSS HATCHED COMPONENTS OF THE BEARING ARE SHOWN FOR REPRESENTATIVE PURPOSES ONLY. THE ACTUAL CONFIGURATION OF THE COMPONENTS WILL BE DEPENDENT UPON THE SPECIFIC BEARING CONFORMING TO THE ITEM SPECIFICATION.

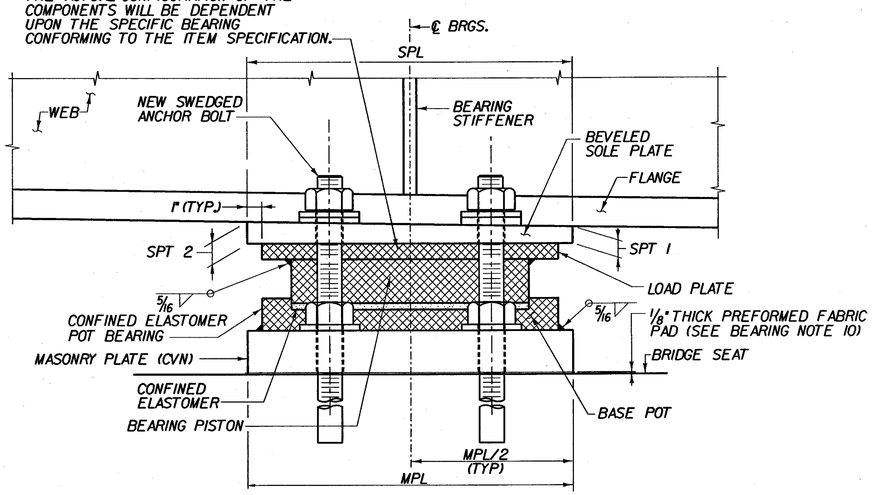

A BR411 FIXED BEARING
(NOT TO SCALE)

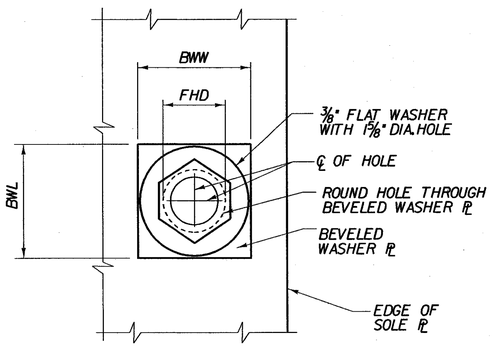

1 BR411 TYPICAL WASHER PLATE DETAIL
(NOT TO SCALE)

NOTES:

1. FOR BEARING NOTES, SEE SHEET BR410.
2. FOR FIXED BEARING TABLE, SEE SHEET BR412.

** BEARINGS SHALL BE CAPABLE OF MAINTAINING A MINIMUM LOAD OF 20% OF MAXIMUM DESIGN CAPACITY AT ALL TIMES.

*** ALL BEARINGS SHALL BE CAPABLE OF RESISTING BOTH THEIR MAXIMUM HORIZONTAL AND VERTICAL DESIGN LOADS

STATE OF VERMONT
AGENCY OF TRANSPORTATION

Town Of	SEARSBURG	Bridge No. 25B	
		Log Sta.	
Highway No.	VT. RTE. 9	Surv. Sta.	
VT. RTE. 9 OVER DEERFIELD RIVER			
FIXED BEARING DETAILS - BR 25B			
Designed By D. VIENI		Drawn by B. DILLENBECK	
Checked By M. OLSTAD	Date 2/2002	Bridge Design Supervisor M. OLSTAD	Date 2/2002
PROJECT SEARSBURG - WILMINGTON		PROJECT NO. NHF 010-K(18)	
L.G.C. Info.			
Bridge Sheet No. BR411		Sheet 217 OF 435	

CHA CLOUGH, HARBOUR & ASSOCIATES LLP
ENGINEERS, SURVEYORS, PLANNERS & LANDSCAPE ARCHITECTS
11 WINNERS CIRCLE ALBANY, NEW YORK, 12205

FILE NAME =u:\9755\MSTN\15\BRDG25B\25B_fix_brg.dgn
DATE/TIME =02/20/02
USER =2225

EXPANSION BEARING GEOMETRY TABLE

BRIDGE NO.	SUB-STRUCTURE NO.	△ SKEW ANGLE	QUANTITY REQ'D.	CAPACITY (K) VERT.	CAPACITY (K) HORIZ.	ONE WAY LONGIT. MOVEMENT	SOLE PLATE LENGTH (SPL)	SOLE PLATE WIDTH (SPW)	SOLE PLATE THICKNESS SPT1 (UPSTATION)	SOLE PLATE THICKNESS SPT2 (DOWNSTATION)	MASONRY PLATE LENGTH (MPL)	MASONRY PLATE WIDTH (MPW)	MASONRY PLATE THICKNESS (MPT)	ANCHOR BOLT SHL	ANCHOR BOLT SHW	ANCHOR BOLT Ø	ANCHOR BOLT BOLTS/BEARING	ANCHOR BOLT OFFSET (BO)	ANCHOR BOLT OFFSET (BL)	BEVELED WASHER BWL	BEVELED WASHER BWW	BEVELED WASHER WTA (UPSTATION)	BEVELED WASHER WTB (DOWNSTATION)	ASSUMED BEARING HEIGHT (H)	"A" DISTANCE (UPSTATION SIDE OF BEARINGS) TEMPERATURE (°F) 0	15	30	45	60	75	90	105
ABUTMENT BEARINGS																																
25B	ABUT. 1	49°-18'-45"	6	129	13	1 5/8"	1'-3 1/2"	2'-3 1/2"	1 1/4"	3/4"	1'-2"	2'-3 1/2"	1 3/4"	4 3/4"	1 7/8"	1 1/2"	4	10 5/16"	3 7/8"	5 3/4"	2 7/8"	9/16"	3/8"	2 7/8"	1 3/16"	1 1/16"	1"	7/8"	13/16"	11/16"	5/8"	1/2"
25B	ABUT. 2	39°-11'-15"	6	117	23	2 7/16"	1'-7"	2'-3 1/2"	1 3/8"	3/4"	1'-4"	2'-3 1/2"	1 3/4"	6 1/2"	1 7/8"	1 1/2"	4	10 5/16"	4 3/4"	7 1/2"	2 7/8"	5/8"	3/8"	2 7/8"	1/2"	1 1/16"	15/16"	1 3/16"	1 3/8"	1 5/8"	1 13/16"	2 1/16"
PIER BEARINGS																																
25B	PIER 2	42°-13'-30"	6	308	30	1 13/16"	1'-6 1/2"	2'-6"	1 3/8"	3/4"	1'-3 1/2"	2'-6"	2 1/4"	5 1/4"	1 7/8"	1 1/2"	4	1'-0 3/16"	4 1/8"	6 1/4"	2 7/8"	9/16"	3/8"	* 3 3/8"	15/16"	1 1/16"	1 3/16"	1 5/16"	1 7/16"	1 9/16"	1 11/16"	1 13/16"

"A" DISTANCE CORRECTION:
ABUT. #1 +3/16" UPSTATION
PIER #2 -1/4" DOWNSTATION
ABUT. #2 -3/8" DOWNSTATION

FIXED BEARING GEOMETRY TABLE

BRIDGE NO.	SUB-STRUCTURE NO.	△ SKEW ANGLE	QUANTITY REQ'D.	CAPACITY (K) VERT.	CAPACITY (K) HORIZ.	SOLE PLATE LENGTH (SPL)	SOLE PLATE WIDTH (SPW)	SOLE PLATE THICKNESS SPT1 (UPSTATION)	SOLE PLATE THICKNESS SPT2 (DOWNSTATION)	MASONRY PLATE LENGTH (MPL)	MASONRY PLATE WIDTH (MPW)	MASONRY PLATE THICKNESS (MPT)	ANCHOR BOLT FHD	ANCHOR BOLT Ø	ANCHOR BOLT BOLTS/BEARING	ANCHOR BOLT OFFSET (BO)	ANCHOR BOLT OFFSET (BL)	BEVELED WASHER BWL	BEVELED WASHER BWW	BEVELED WASHER WTA (UPSTATION)	BEVELED WASHER WTB (DOWNSTATION)	ASSUMED BEARING HEIGHT (H)
PIER BEARINGS																						
25B	PIER 1	46°-16'-30"	6	313	86	1'-3 1/2"	2'-3 1/2"	1 1/4"	3/4"	1'-3 1/2"	2'-3 1/2"	2"	1 7/8"	1 1/2"	4	10 15/16"	3 1/8"	2 7/8"	2 7/8"	1/2"	3/8"	* 2 7/8"

NOTES:

1. * THE DIMENSION "H" IN THE BEARING TABLE REPRESENTS THE ASSUMED TOTAL HEIGHT OF BEARING MECHANISM BETWEEN THE SOLE PLATE AND MASONRY PLATE USED BY THE DESIGNER TO ESTABLISH CONCRETE DIMENSIONS. THE CONTRACTOR SHALL RECOMPUTE ALL TOP OF PEDESTAL ELEVATIONS TO ACCURATELY REFLECT THE HEIGHT OF BEARING SUPPLIED.
2. SEE EXPANSION BEARING DETAILS ON BRIDGE SHEET BR410.
3. SEE FIXED BEARING DETAILS ON BRIDGE SHEET BR411.
4. SEE SOLE AND MASONRY PLATE DETAILS ON BR410 AND BR411.
5. SEE BEARING NOTES ON BRIDGE SHEET BR410.

STATE OF VERMONT
AGENCY OF TRANSPORTATION

Town Of SEARSBURG	Bridge No. 25B
	Log Sta.
Highway No. VT. RTE. 9	Surv. Sta.
VT. RTE. 9 OVER DEERFIELD RIVER	
BEARING GEOMETRY TABLES - BR25B	
Designed By D. VIENI	Drawn by K. DETRICK
Checked By M. OLSTAD Date 12/2001	Bridge Design Supervisor M. OLSTAD Date 12/2001
PROJECT SEARSBURG - WILMINGTON	PROJECT NO. NHF 010-K(8)
I.G.C. Info.	
Bridge Sheet No. BR412	Sheet 218 OF 435

CLOUGH, HARBOUR & ASSOCIATES LLP
ENGINEERS, SURVEYORS, PLANNERS & LANDSCAPE ARCHITECTS
8 WINNERS CIRCLE ALBANY, NEW YORK, 12205

FILE NAME = u:\9795\MSTN\15\BRDG25B\25B_expbrg_tbls.plt
DATE/TIME = 12/12/01
USER = 2225

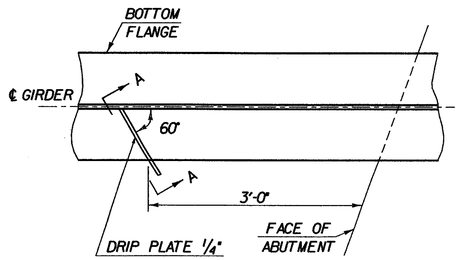

PLAN DRIP PLATE
(NOT TO SCALE)

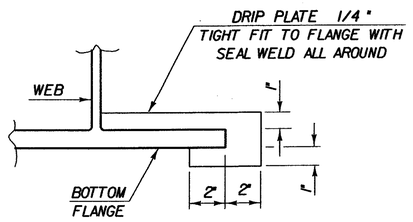

SECTION A - A
(NOT TO SCALE)

NOTE: DRIP PLATES SHALL BE PLACED ON OUTSIDE EDGE OF FASCIA GIRDERS ON THE HIGH SIDE OF ALL PIERS, SPLICES AND ABUTMENTS OR AS INDICATED ON PROJECT PLANS.

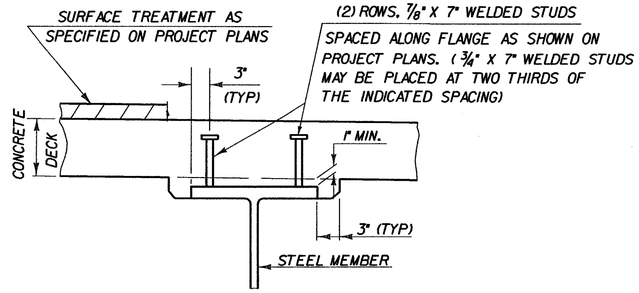

HAUNCH AND SHEAR CONNECTOR DETAILS
(NOT TO SCALE)

FILE NAME = a:\9755\MSTN\15\BR00258\258_miscell.plt
DATE/TIME = 12/12/01
USER = 2225

CHA CLOUGH, HARBOUR & ASSOCIATES LLP
ENGINEERS, SURVEYORS, PLANNERS & LANDSCAPE ARCHITECTS
3 WINNERS CIRCLE ALBANY, NEW YORK, 12205

STATE OF VERMONT
AGENCY OF TRANSPORTATION

Town Of SEARSBURG	Bridge No. 25B
Highway No. VT. RTE. 9	Log Sta.
	Surv. Sta.

VT. RTE. 9 OVER DEERFIELD RIVER

MISCELLANEOUS DETAIL

Designed By D. VIENI	Drawn by Wm. WEATHERBY
Checked By M. OLSTAD Date 12/2001	Bridge Design Supervisor M. OLSTAD Date 12/2001
PROJECT SEARSBURG - WILMINGTON	PROJECT NO. NHF 010-1(18)
L.C.C. Info.	
Bridge Sheet No. BR413	Sheet 219 OF 435

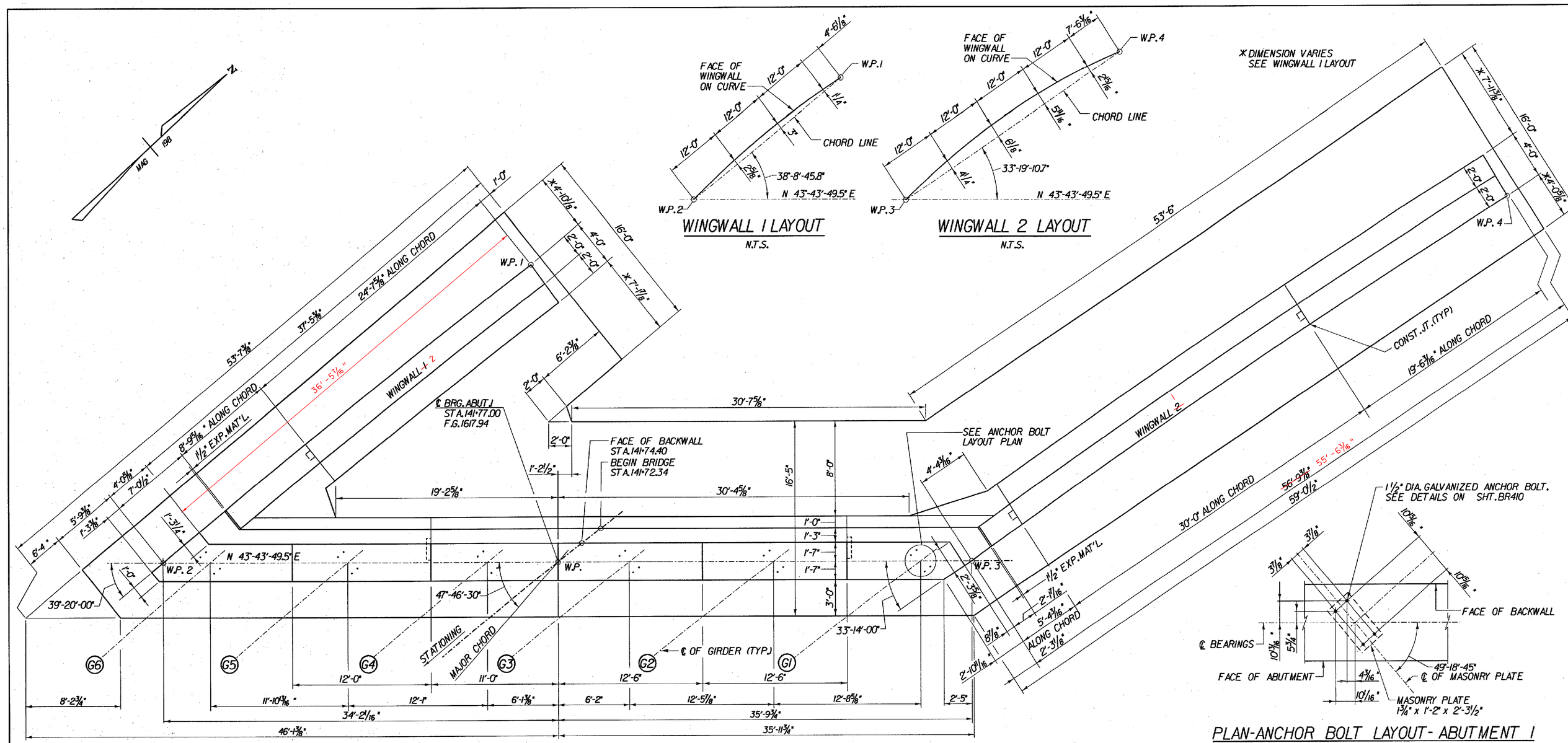

WINGWALL 1 LAYOUT
N.T.S.

WINGWALL 2 LAYOUT
N.T.S.

PLAN - ABUTMENT 1
SCALE 1/4" = 1'-0

PLAN-ANCHOR BOLT LAYOUT- ABUTMENT 1
SCALE 1/2" = 1'-0

NOTES:

1. PEDESTAL REINFORCEMENT IS NOT SHOWN. FOR BRIDGE SEAT DETAILS, SEE SHEET BR416 & BR418.
2. SEE SHEET BR416 AND BR419 FOR CORNER AND FILLET REINFORCEMENT DETAILS.
3. FOR APROACH SLAB DETAILS, SEE SHEET BR422.
4. FOR MAJOR CHORD LAYOUT, SEE SHEET BR406.
5. NF DENOTES NEAR FACE. FF DENOTES FAR FACE.

CLOUGH, HARBOUR & ASSOCIATES LLP
ENGINEERS, SURVEYORS, PLANNERS & LANDSCAPE ARCHITECTS
WINNERS CIRCLE ALBANY, NEW YORK, 12205

STATE OF VERMONT
AGENCY OF TRANSPORTATION

Town Of	SEARSBURG	Bridge No. 25B
		Log Sta.
Highway No.	VT. RTE. 9	Surv. Sta.
VT. RTE. 9 OVER DEERFIELD RIVER		
ABUTMENT 1 PLAN		
Designed By D. VIENI		Drawn by J. LAGONE
Checked By M. OLSTAD	Date 2/2002	Bridge Design Supervisor M. OLSTAD Date 2/2002
PROJECT SEARSBURG - WILMINGTON		PROJECT NO. NHF 010-1(18)
I.G.C. Info.		
Bridge Sheet No. BR414		Sheet 220 OF 435

FILE NAME =BR4/35/RS/RS/BR00205 ...
DATE/TIME =02/20/02
USER =2225

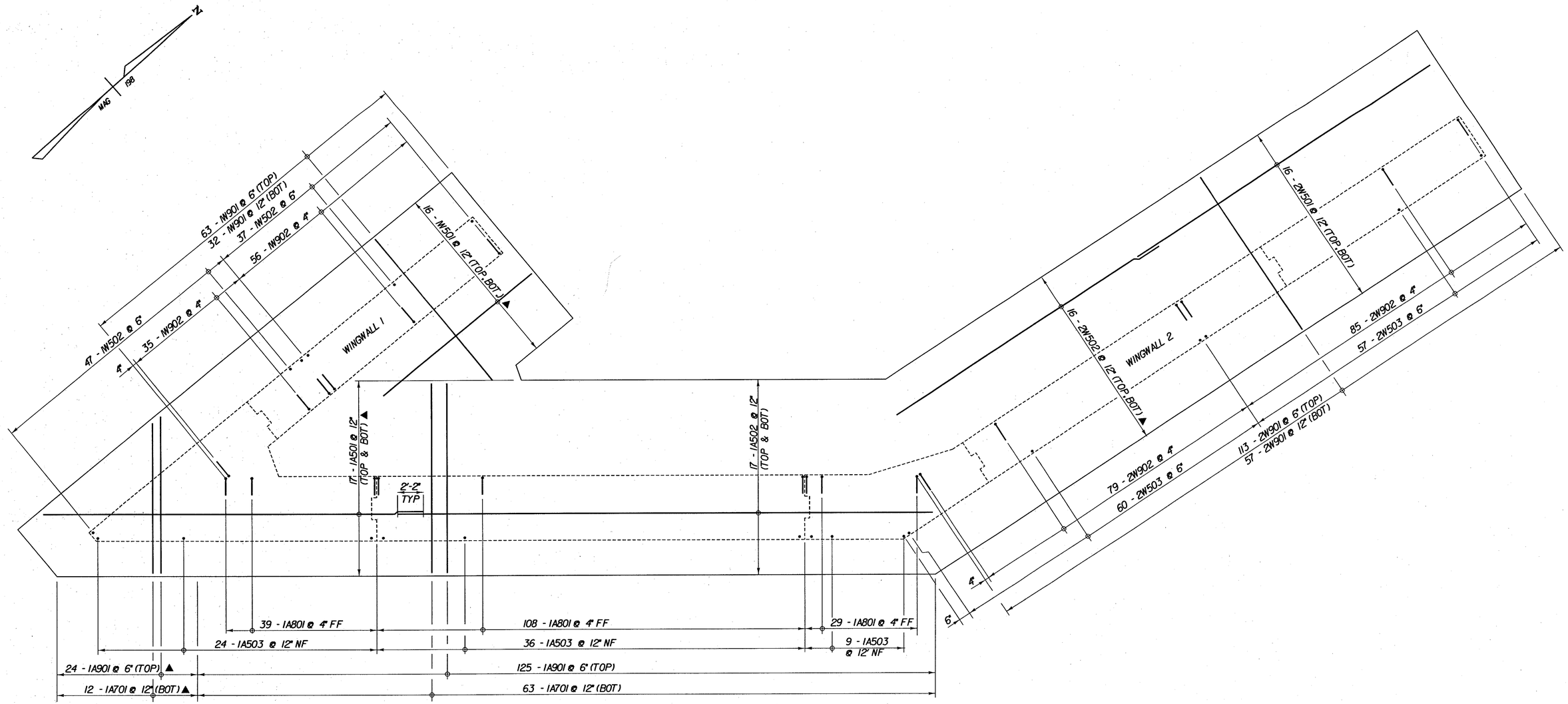

FOOTING PLAN - ABUTMENT 1

SCALE 1/4" = 1'-0

1 0 2 4 6

KEY:
NF = NEAR FACE
FF = FAR FACE
EF = EACH FACE
▲ = BARS TO BE CUT IN FIELD
◆ = FIELD BEND
* ELEVATIONS APPLY AT NEAR FACE OF BACKWALL.
3" CLR. UNLESS OTHERWISE SPECIFIED ON THE PLANS.

CLOUGH, HARBOUR & ASSOCIATES LLP
ENGINEERS, SURVEYORS, PLANNERS & LANDSCAPE ARCHITECTS
III WINNERS CIRCLE ALBANY, NEW YORK, 12205

STATE OF VERMONT
AGENCY OF TRANSPORTATION

Town Of SEARSBURG	Bridge No. 25B
Highway No. VT. RTE. 9	Log Sta. / Surv. Sta.
VT. RTE. 9 OVER DEERFIELD RIVER	
ABUTMENT 1 FOOTING PLAN	
Designed By D. VIENI	Drawn by J. LAGONE
Checked By M. OLSTAD Date 2/2002	Bridge Design Supervisor M. OLSTAD Date 2/2002
PROJECT SEARSBURG - WILMINGTON	PROJECT NO. NHF 010-1(18)
I.G.C. Info.	
Bridge Sheet No. BR415	Sheet 221 OF 435

FILE NAME = u:\9755\MSTN\15\BRDG25B\25b_abu1.dgn
DATE/TIME = 02/20/02
USER = 2225

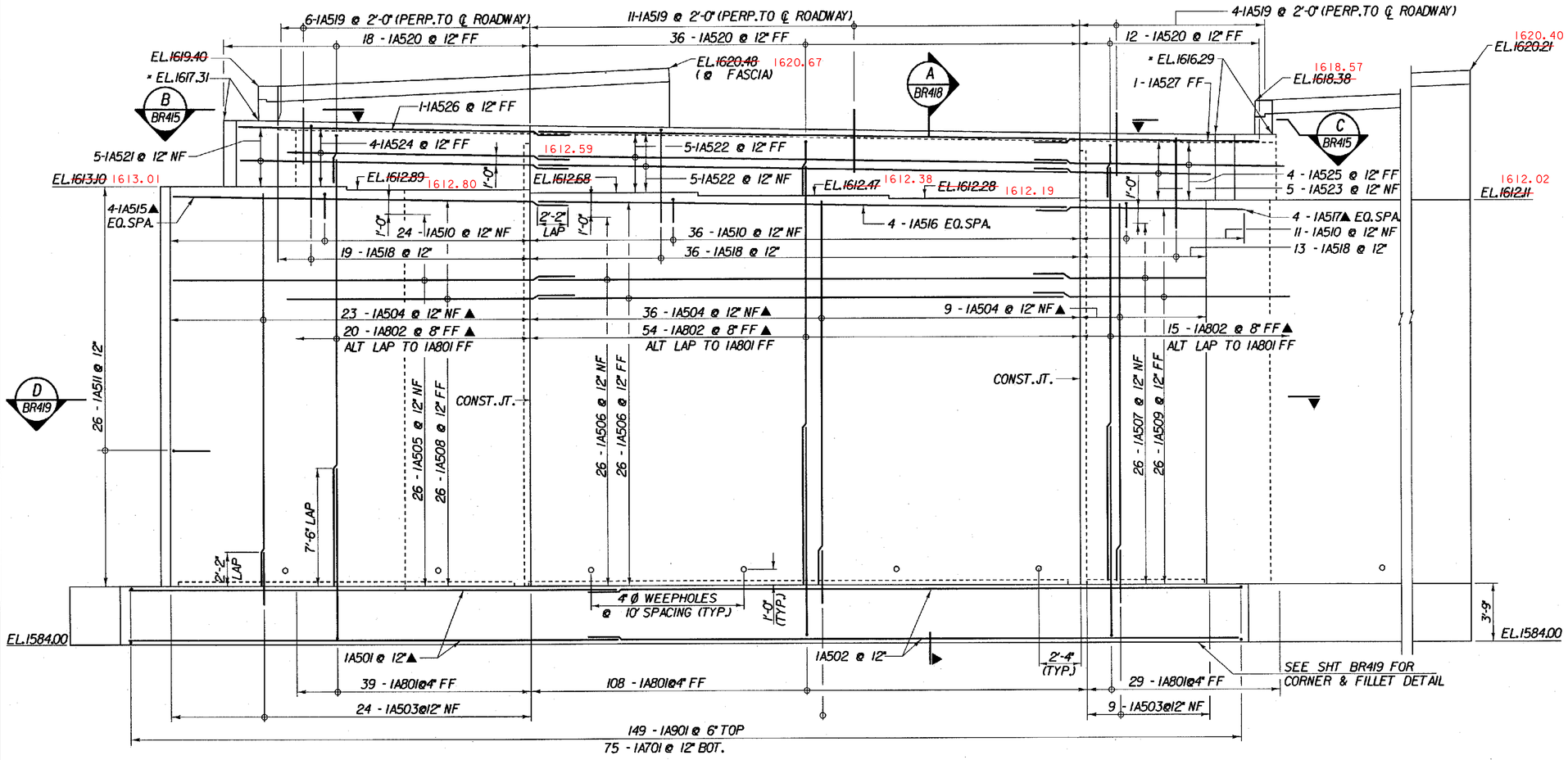

ELEVATION - ABUTMENT 1

SCALE 1/4" = 1'-0

BRIDGE SEAT ELEVATIONS CORRECTIONS REFLECT BEARING DESIGN CHANGE FROM STRUCTURES

WINGWALL ELEVATION CORRECTIONS REFLECT A RAISING OF BRIDGE DECK 0.19 FT (INCREASE HAUNCHES TO MAINTAIN MINIMUM.)

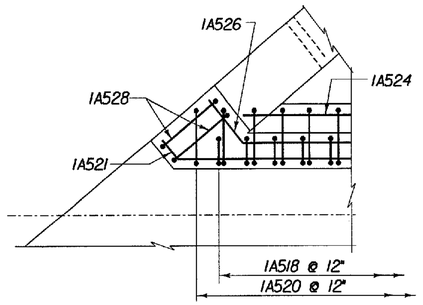

B BR415 CORNER SECTION

SCALE 3/8" = 1'-0

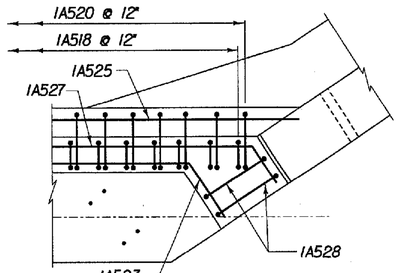

C BR415 CORNER SECTION

SCALE 3/8" = 1'-0

KEY:

NF - NEAR FACE
FF - FAR FACE
EF - EACH FACE
▲ - BARS TO BE CUT IN FIELD
◆ - FIELD BEND

× ELEVATIONS SHOWN ARE AT NEAR FACE OF BACKWALL. AND ARE APPROXIMATE. THEY ARE USED FOR ESTIMATING PURPOSES ONLY. ALL TOP OF BACKWALL ELEVATIONS WILL BE DETERMINED AFTER STRUCTURAL IS SET.

3" CLR. UNLESS OTHERWISE SPECIFIED ON THE PLANS.

NOTES:

1. PEDESTAL REINFORCEMENT IS NOT SHOWN. FOR BRIDGE SEAT DETAILS, SEE SHEET BR418.
2. SEE SHEET BR414 FOR CORNER AND FILLET REINFORCEMENT DETAILS.
3. FOR APPROACH SLAB DETAILS, SEE SHEET BR414.
4. FOR MAJOR CHORD LAYOUT, SEE SHEET BR406.
5. NF DENOTES NEAR FACE. FF DENOTES FAR FACE.

STATE OF VERMONT
AGENCY OF TRANSPORTATION

Town Of	SEARSBURG	Bridge No. 25B
Highway No.	VT. RTE. 9	Log Sta.
		Surv. Sta.

VT. RTE. 9 OVER DEERFIELD RIVER

ABUTMENT 1 ELEVATION

Designed By D. VIENI	Drawn by J. LAGONE
Checked By M. OLSTAD Date 2/2002	Bridge Design Supervisor M. OLSTAD Date 2/2002
PROJECT SEARSBURG - WILMINGTON	PROJECT NO. NHF 010-1(18)
I.G.C. Info.	
Bridge Sheet No. BR416	Sheet 222 OF 435

CHA CLOUGH, HARBOUR & ASSOCIATES LLP
ENGINEERS, SURVEYORS, PLANNERS & LANDSCAPE ARCHITECTS
11 WINNERS CIRCLE ALBANY, NEW YORK, 12205

FILE NAME = br_r7250\DGN\S1N15\BRU0286\250_abut1.dgn
DATE/TIME = 8/27/2002 7:36:02
USER = 2225

WINGWALL ELEVATION CORRECTIONS
REFLECT A RAISING OF BRIDGE DECK
0.19 FT (INCREASED HAUNCH TO
MAINTAIN MINIMUM.)

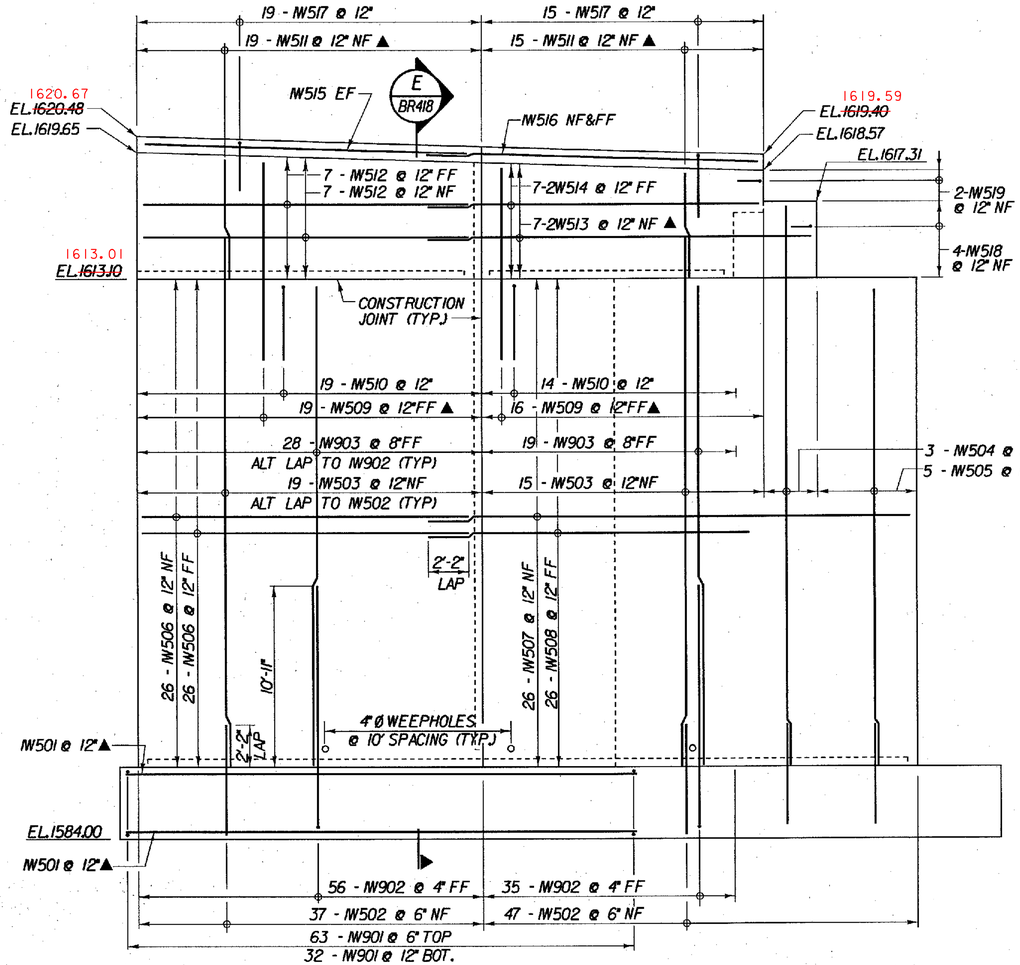

ELEVATION - WINGWALL 1

SCALE 1/4" = 1'-0

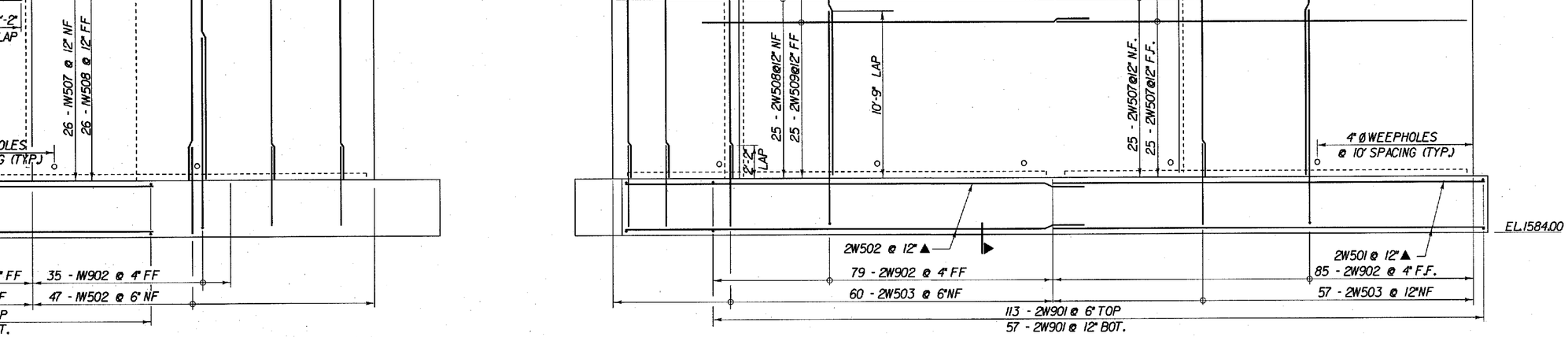

ELEVATION - WINGWALL 2

SCALE 1/4" = 1'-0

KEY:

NF = NEAR FACE
FF = FAR FACE
EF = EACH FACE
▲ = BARS TO BE CUT IN FIELD
◆ = FIELD BEND
* ELEVATIONS APPLY AT NEAR FACE OF BACKWALL.
3" CLR. UNLESS OTHERWISE SPECIFIED ON THE PLANS.

STATE OF VERMONT
AGENCY OF TRANSPORTATION

Town Of SEARSBURG	Bridge No. 25B Log Sta. Surv. Sta.
Highway No. VT. RTE. 9	
VT. RTE. 9 OVER DEERFIELD RIVER	
ABUTMENT I WINGWALL ELEVATIONS	
Designed By D. VIENI	Drawn by J. LAGONE
Checked By M. OLSTAD Date 2/2002	Bridge Design Supervisor M. OLSTAD Date 2/2002
PROJECT SEARSBURG - WILMINGTON	PROJECT NO. NHF 010-K(8)
L.G.C. Info.	
Bridge Sheet No. BR417	Sheet 223 OF 435

CLOUGH, HARBOUR & ASSOCIATES LLP
ENGINEERS, SURVEYORS, PLANNERS & LANDSCAPE ARCHITECTS
11 WINNERS CIRCLE ALBANY, NEW YORK, 12205

DATE/TIME = 02/28/02
USER =2225

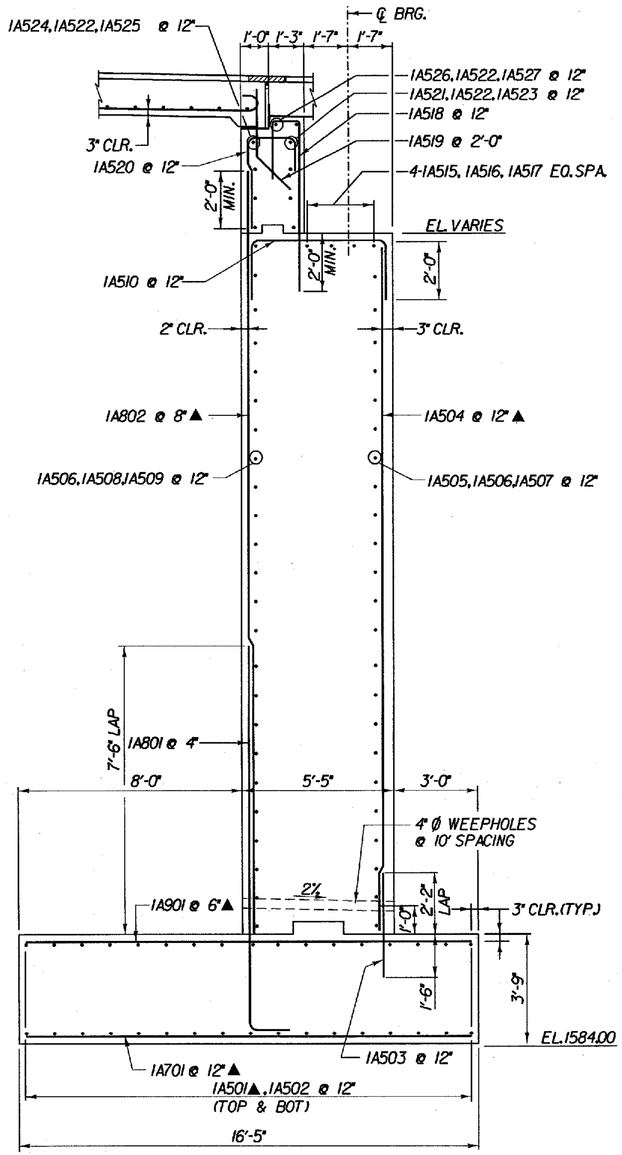

A BR415 TYPICAL SECTION - ABUTMENT 1

SCALE 3/8" = 1'-0

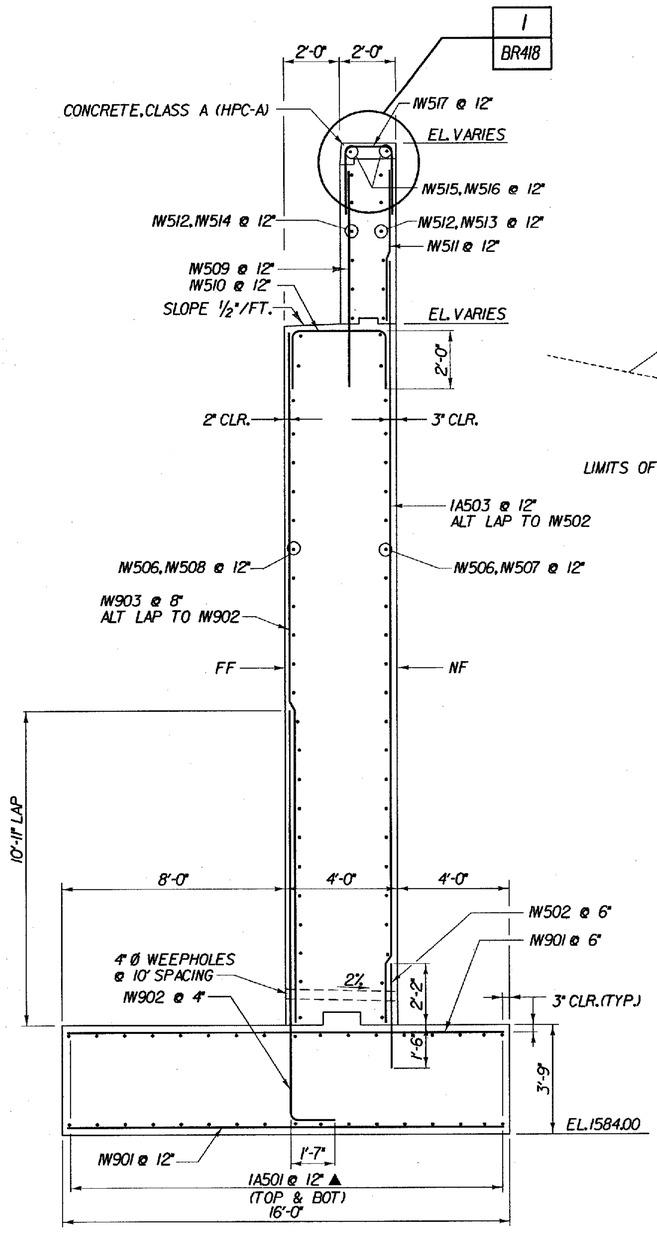

E BR417 TYPICAL WINGWALL SECTION

(WINGWALL 1 SHOWN WW2 SIMILAR)

SCALE 3/8" = 1'-0

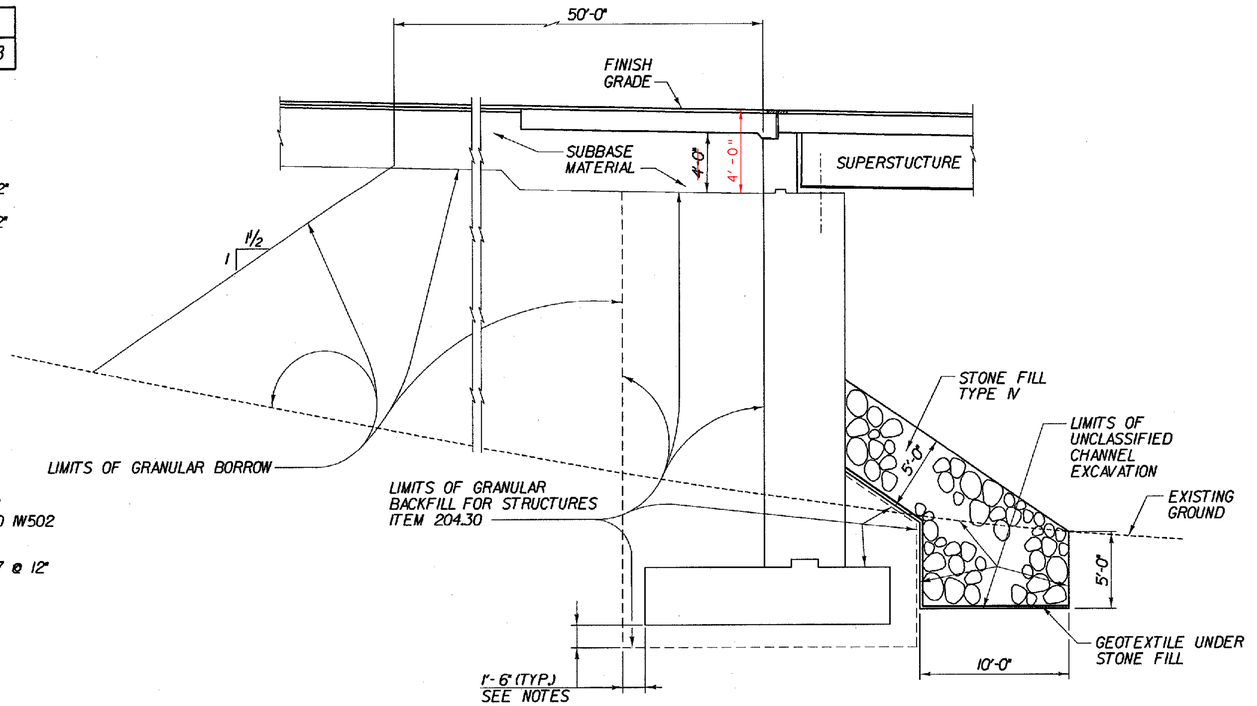

TYPICAL ABUTMENT SECTION - BR 25B

SCALE 1" = 5'-0

5 0 5

KEY:
NF - NEAR FACE
FF - FAR FACE
EF - EACH FACE
▲ - BARS TO BE CUT IN FIELD
◆ - FIELD BEND
3" CLR. UNLESS OTHERWISE SPECIFIED ON THE PLANS.

CLOUGH, HARBOUR & ASSOCIATES LLP
ENGINEERS, SURVEYORS, PLANNERS & LANDSCAPE ARCHITECTS
13 WINNERS CIRCLE ALBANY, NEW YORK, 12205

STATE OF VERMONT
AGENCY OF TRANSPORTATION

Town Of SEARSBURG	Bridge No. 25B
Highway No. VT. RTE. 9	Log Sta.
	Surv. Sta.

VT. RTE. 9 OVER DEERFIELD RIVER

ABUTMENT 1 SECTIONS

Designed By D. VIENI	Drawn by J. LAGONE
Checked By M. OLSTAD Date 2/2002	Bridge Design Supervisor M. OLSTAD Date 2/2002
PROJECT SEARSBURG - WILMINGTON	PROJECT NO. NHF 010-1(18)
L.G.C. Info.	
Bridge Sheet No. BR418	Sheet 224 OF 435

DATE/TIME = 02/28/02
USER = 22225

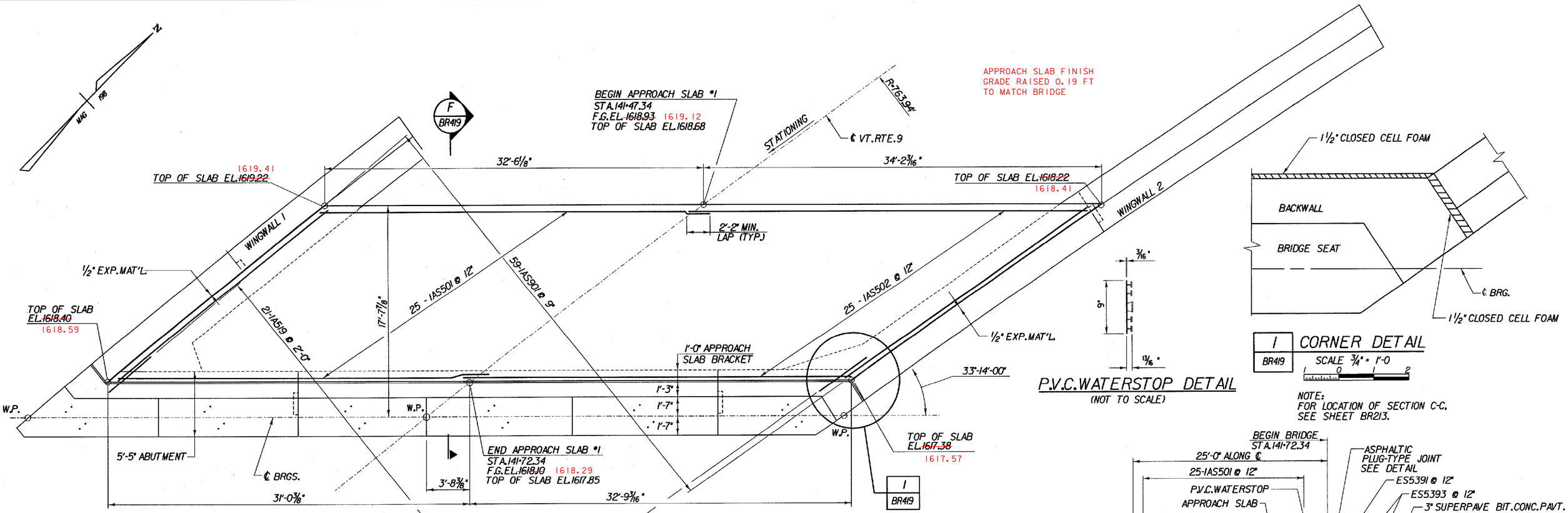

PLAN - APPROACH SLAB 1

SCALE 1/4" = 1'-0

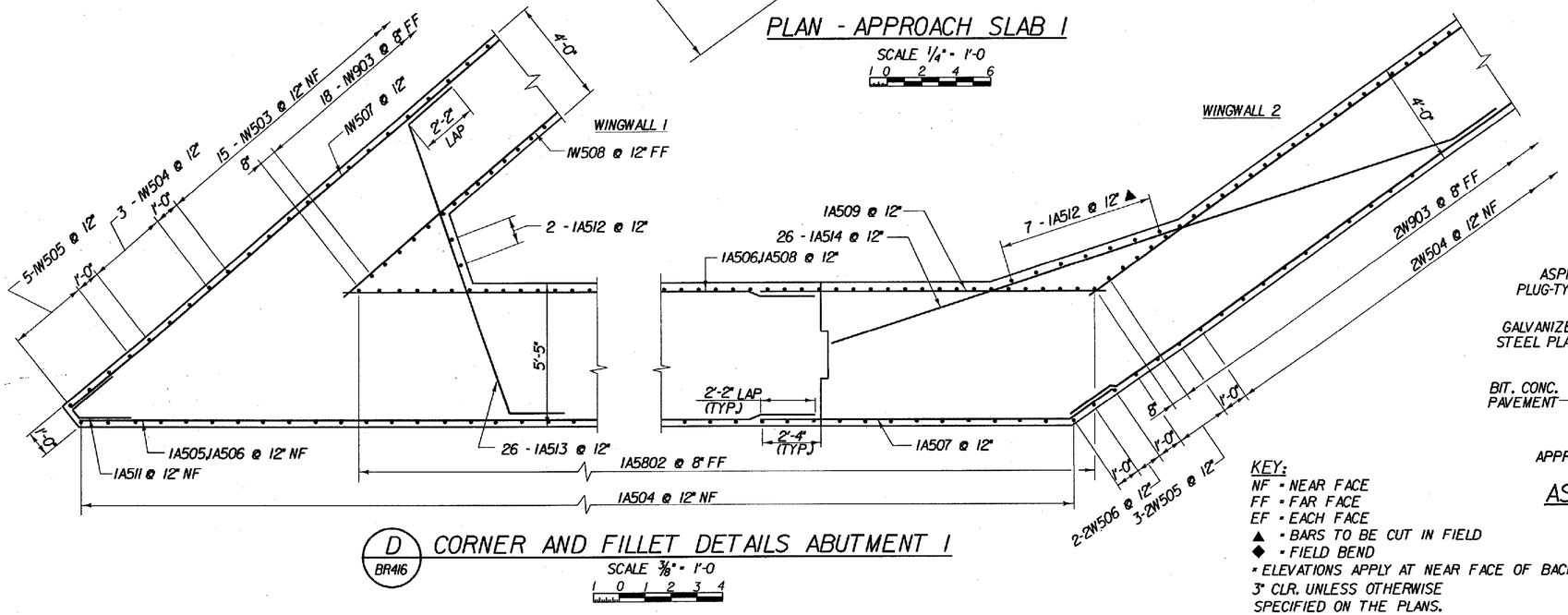

D CORNER AND FILLET DETAILS ABUTMENT 1

BR416

SCALE 3/8" = 1'-0

P.V.C. WATERSTOP DETAIL

(NOT TO SCALE)

1 CORNER DETAIL

BR419

SCALE 3/4" = 1'-0

NOTE:
FOR LOCATION OF SECTION C-C, SEE SHEET BR213.

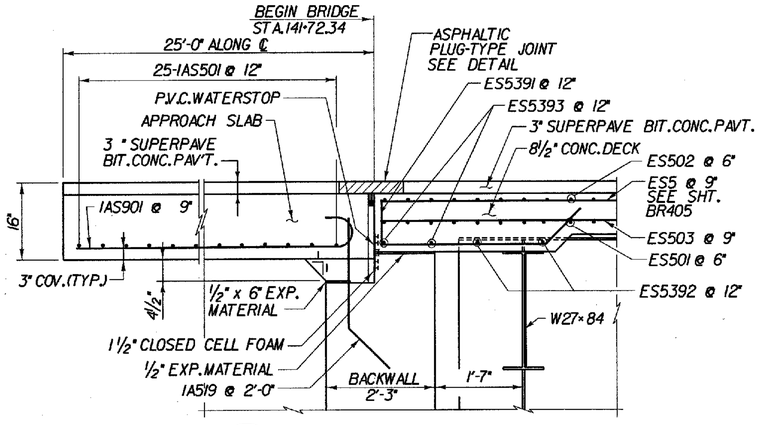

F APPROACH SLAB SECTION

BR419

SCALE 3/4" = 1'-0

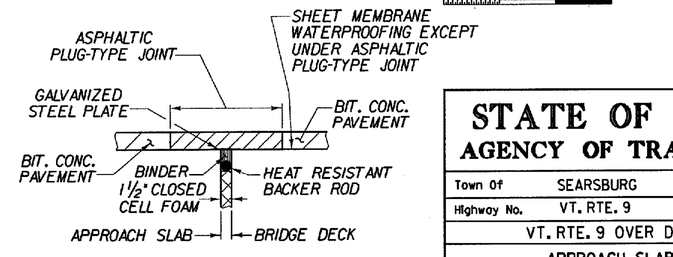

ASPHALTIC PLUG-TYPE JOINT DETAIL

(NOT TO SCALE)

KEY:
NF = NEAR FACE
FF = FAR FACE
EF = EACH FACE
▲ = BARS TO BE CUT IN FIELD
◆ = FIELD BEND
* ELEVATIONS APPLY AT NEAR FACE OF BACKWALL.
3" CLR. UNLESS OTHERWISE SPECIFIED ON THE PLANS.

STATE OF VERMONT
AGENCY OF TRANSPORTATION

Town Of	SEARSBURG	Bridge No. 25B
Highway No.	VT. RTE. 9	Log Sta. / Surv. Sta.

VT. RTE. 9 OVER DEERFIELD RIVER

APPROACH SLAB 1 DETAILS

Designed By D. VIENI	Drawn by J. LAGONE/K. DETRICK
Checked By M. OLSTAD Date 2/2002	Bridge Design Supervisor M. OLSTAD Date 2/2002
PROJECT SEARSBURG - WILMINGTON	PROJECT NO. NHF 010-1(18)
L.G.C. Info.	
Bridge Sheet No. BR419	Sheet 225 OF 435

CLOUGH, HARBOUR & ASSOCIATES LLP
ENGINEERS, SURVEYORS, PLANNERS & LANDSCAPE ARCHITECTS
11 WINNERS CIRCLE ALBANY, NEW YORK, 12205

DATE/TIME = 02/28/02
USER = 22225

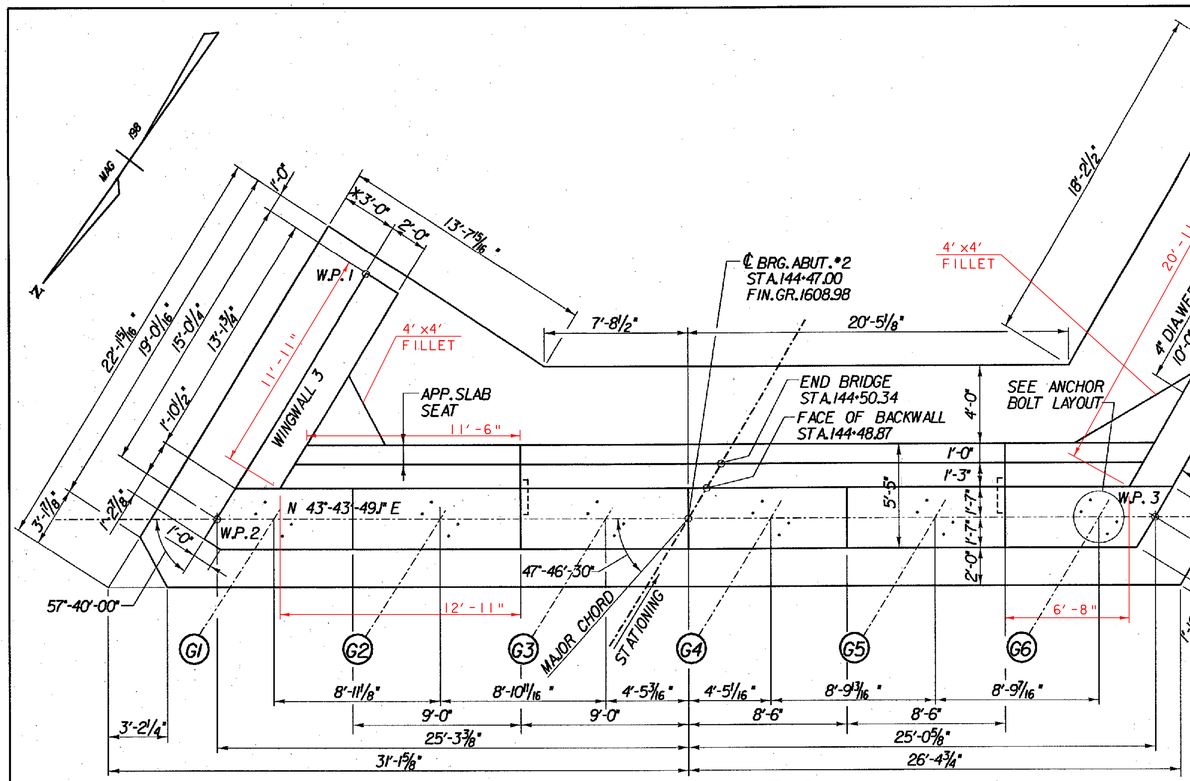

PLAN - ABUTMENT 2

SCALE 1/4" = 1'-0

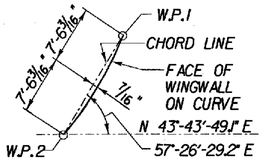

WINGWALL 3 LAYOUT

N.T.S.

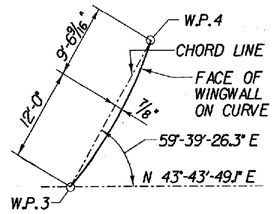

WINGWALL 4 LAYOUT

N.T.S.

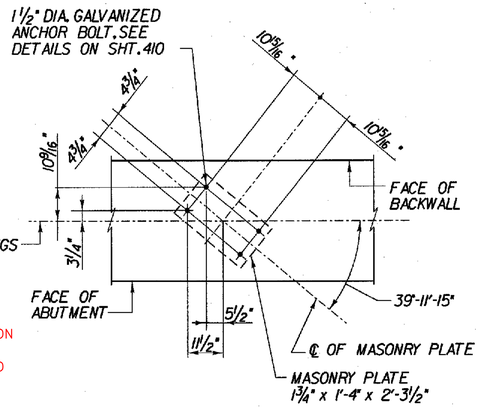

PLAN-ANCHOR BOLT LAYOUT- ABUTMENT 2

SCALE ½" = 1'-0

WINGWALL/BACKWALL ELEVATION CHANGES REFLECT RAISING BRIDGE AND DECK 0.19 FT TO MAINTAIN MINIMUM HAUNCH.

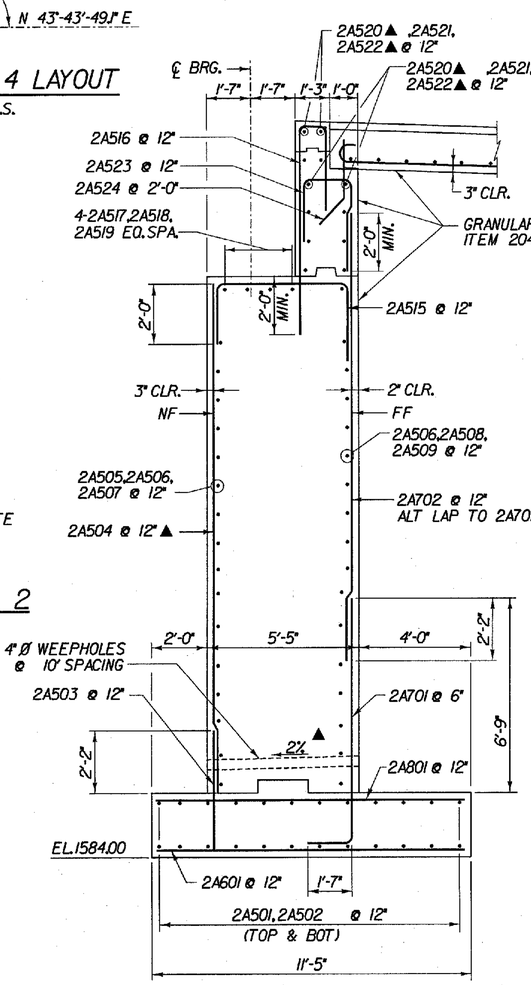

TYPICAL ABUTMENT SECTION

G / BR420

SCALE ⅜" = 1'-0

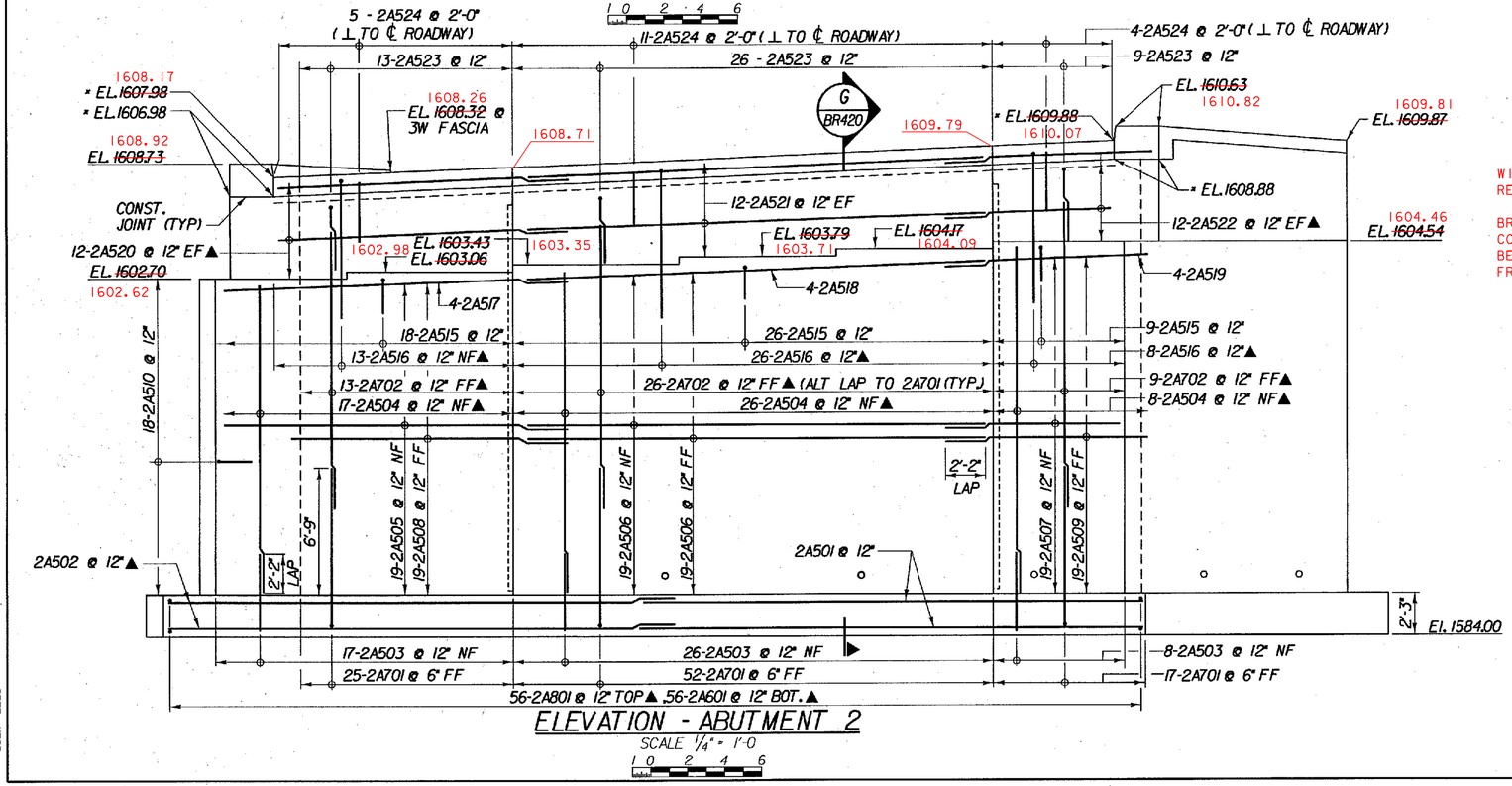

ELEVATION - ABUTMENT 2

SCALE 1/4" = 1'-0

WINGWALL ENDS ALSO REFLECT A FIELD ERROR.

BRIDGE SEAT ELEVATION CORRECTIONS REFLECT BEARING DESIGN CHANGE FROM STRUCTURES.

NOTES:

1. SEE SHEET BR422 FOR CORNER AND FILLET REINFORCEMENT DETAILS.
2. FOR APPROACH SLAB 2 DETAILS, SEE SHEET BR422.
3. FOR MAJOR CHORD LAYOUT, SEE SHEET BR406.

KEY:

NF - NEAR FACE
FF - FAR FACE
EF - EACH FACE
▲ - BARS TO BE CUT IN FIELD
◆ - FIELD BEND

* ELEVATIONS APPLY AT NEAR FACE OF BACKWALL. ELEVATIONS ARE APPROXIMATE, USED FOR ESTIMATING PURPOSES ONLY. ALL TOP OF BACKWALL ELEVATIONS WILL BE DETERMINED AFTER STRUCTURAL IS SET.

3" CLR. UNLESS OTHERWISE SPECIFIED ON THE PLANS.

STATE OF VERMONT
AGENCY OF TRANSPORTATION

Town Of	SEARSBURG	Bridge No. 258	
Highway No.	VT. RTE. 9	Log Sta.	
		Surv. Sta.	

VT. RTE. 9 OVER DEERFIELD RIVER

ABUTMENT 2 PLAN, ELEVATION & SECTION

Designed By D. VIENI		Drawn by J. LAGONE	
Checked By M. OLSTAD	Date 2/2002	Bridge Design Supervisor M. OLSTAD	Date 2/2002
PROJECT SEARSBURG - WILMINGTON		PROJECT NO. NHF 010-1(18)	
I.G.C. Info.			
Bridge Sheet No. BR420		Sheet 226 OF 435	

CLOUGH, HARBOUR & ASSOCIATES LLP
ENGINEERS, SURVEYORS, PLANNERS & LANDSCAPE ARCHITECTS
11 WINNERS CIRCLE ALBANY, NEW YORK, 12205

DATE/TIME = 02/28/02 15:48
USER = 2225
I:\DGN\02S\258\258_abut2.dgn

WINGWALL ELEVATION CORRECTIONS
REFLECT A RAISING OF BRIDGE DECK
0.19 FT (INCREASED HAUNCHES TO
MAINTAIN THE MINIMUM 1" HAUNCH.)

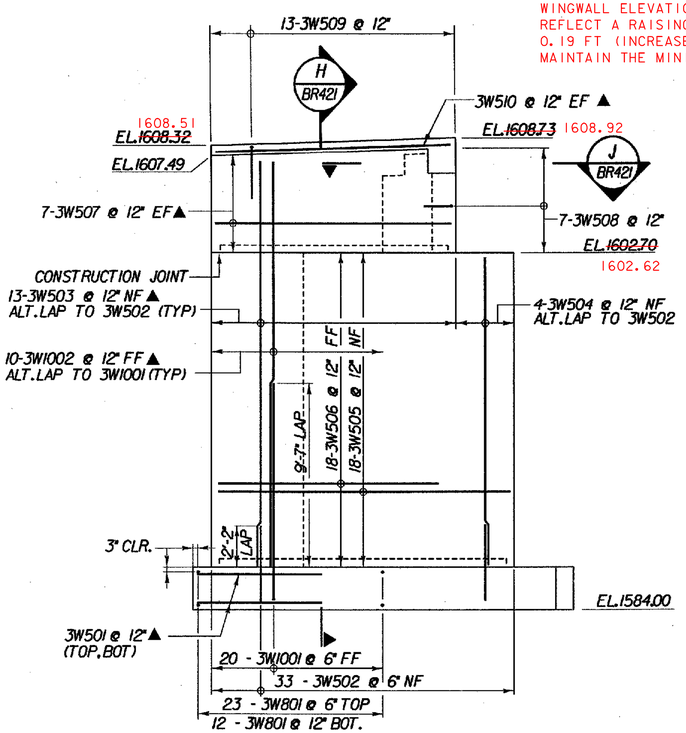

ELEVATION - WINGWALL 3

SCALE 1/4" = 1'-0

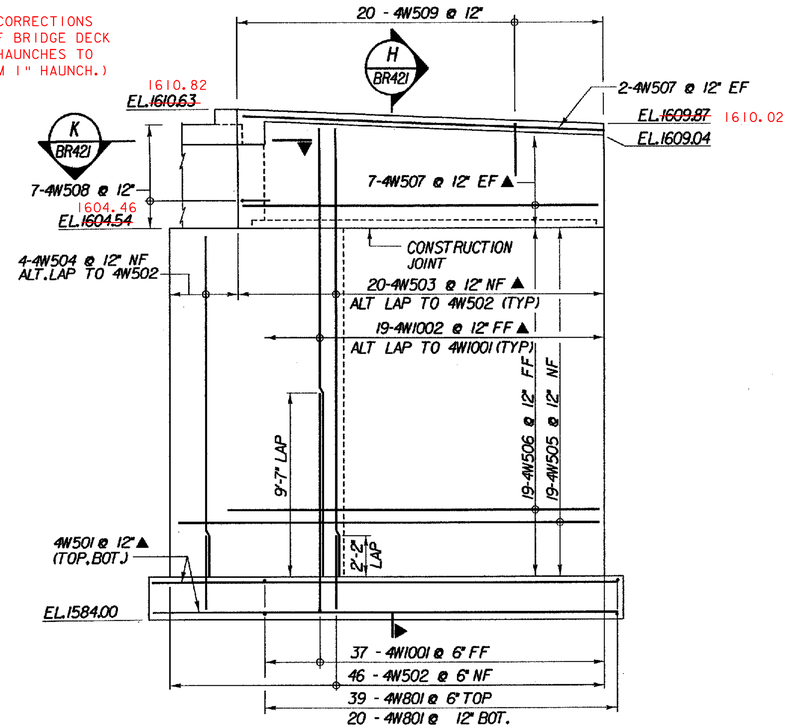

ELEVATION - WINGWALL 4

SCALE 1/4" = 1'-0

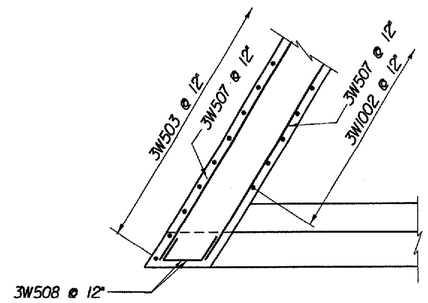

J BR421 TYPICAL WINGWALL SECTION

SCALE 3/8" = 1'-0

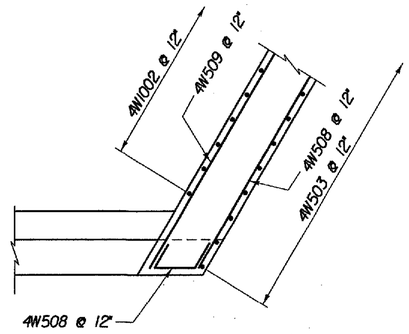

K BR421 TYPICAL WINGWALL SECTION

SCALE 3/8" = 1'-0

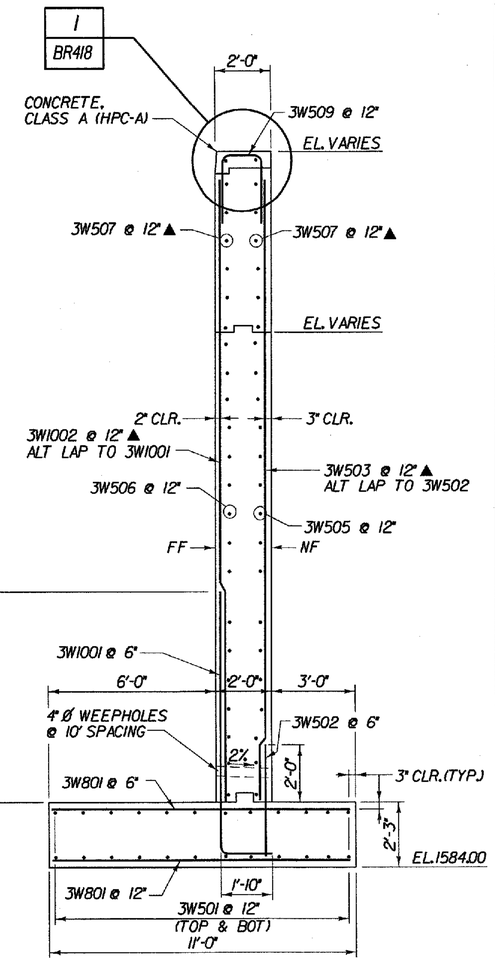

H BR421 TYPICAL WINGWALL SECTION

(WINGWALL 3 SHOWN WW4 SIMILAR)

SCALE 3/8" = 1'-0

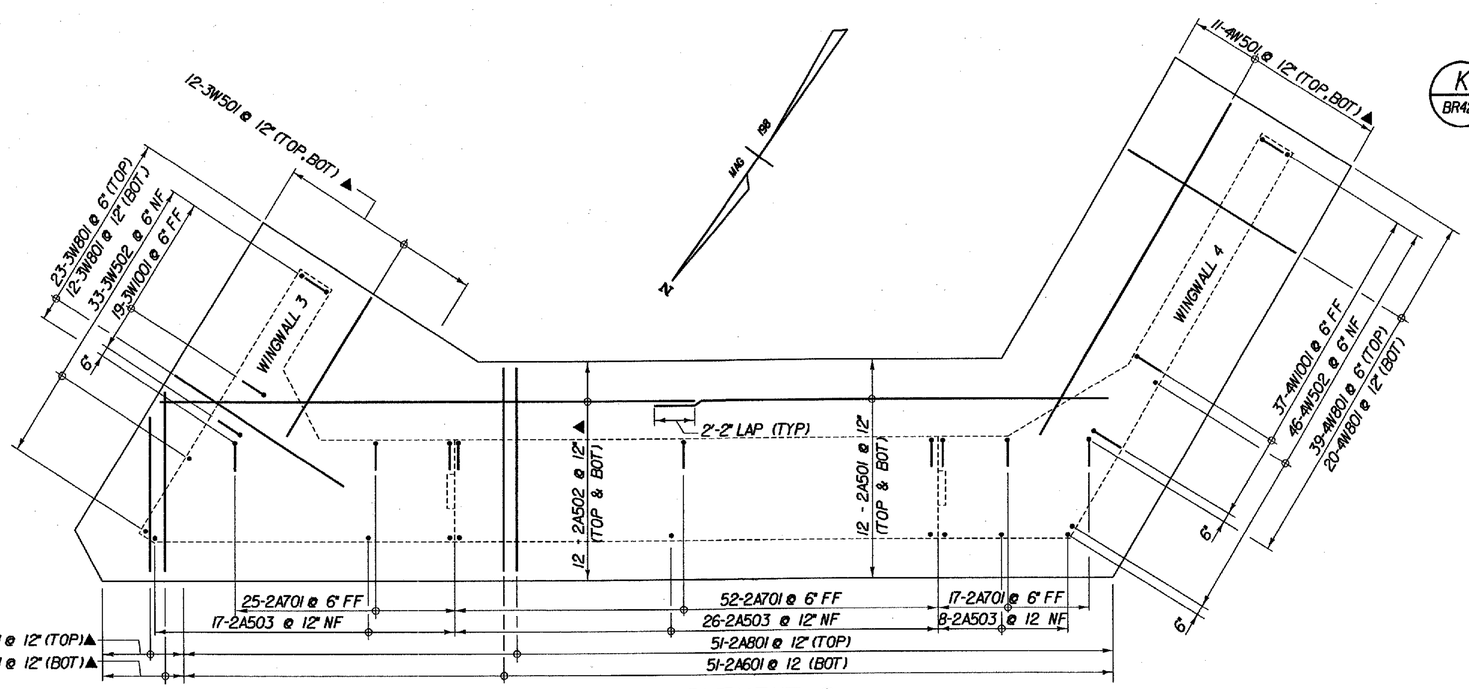

FOOTING PLAN - ABUTMENT 2

SCALE 1/4" = 1'-0

KEY:
NF = NEAR FACE
FF = FAR FACE
EF = EACH FACE
▲ = BARS TO BE CUT IN FIELD
◆ = FIELD BEND
* ELEVATIONS APPLY AT NEAR FACE OF BACKWALL.
3" CLR. UNLESS OTHERWISE SPECIFIED ON THE PLANS.

CLOUGH, HARBOUR & ASSOCIATES LLP
ENGINEERS, SURVEYORS, PLANNERS & LANDSCAPE ARCHITECTS
3 WINNERS CIRCLE ALBANY, NEW YORK, 12205

STATE OF VERMONT
AGENCY OF TRANSPORTATION

Town Of SEARSBURG	Bridge No. 25B
Highway No. VT. RTE. 9	Log Sta. / Surv. Sta.
VT. RTE. 9 OVER DEERFIELD RIVER	
WINGWALL 3 & 4 ELEVATIONS AND SECTION	
Designed By D. VIENI	Drawn by J. LAGONE
Checked By M. OLSTAD Date 12/2001	Bridge Design Supervisor M. OLSTAD Date 12/2001
PROJECT SEARSBURG - WILMINGTON	PROJECT NO. NHF 010-1(18)
L.G.C. Info.	
Bridge Sheet No. BR421	Sheet 227 OF 435

Job No. 83-3302.0
M.J. Br. No. 2
M.J. Sht. No. 28

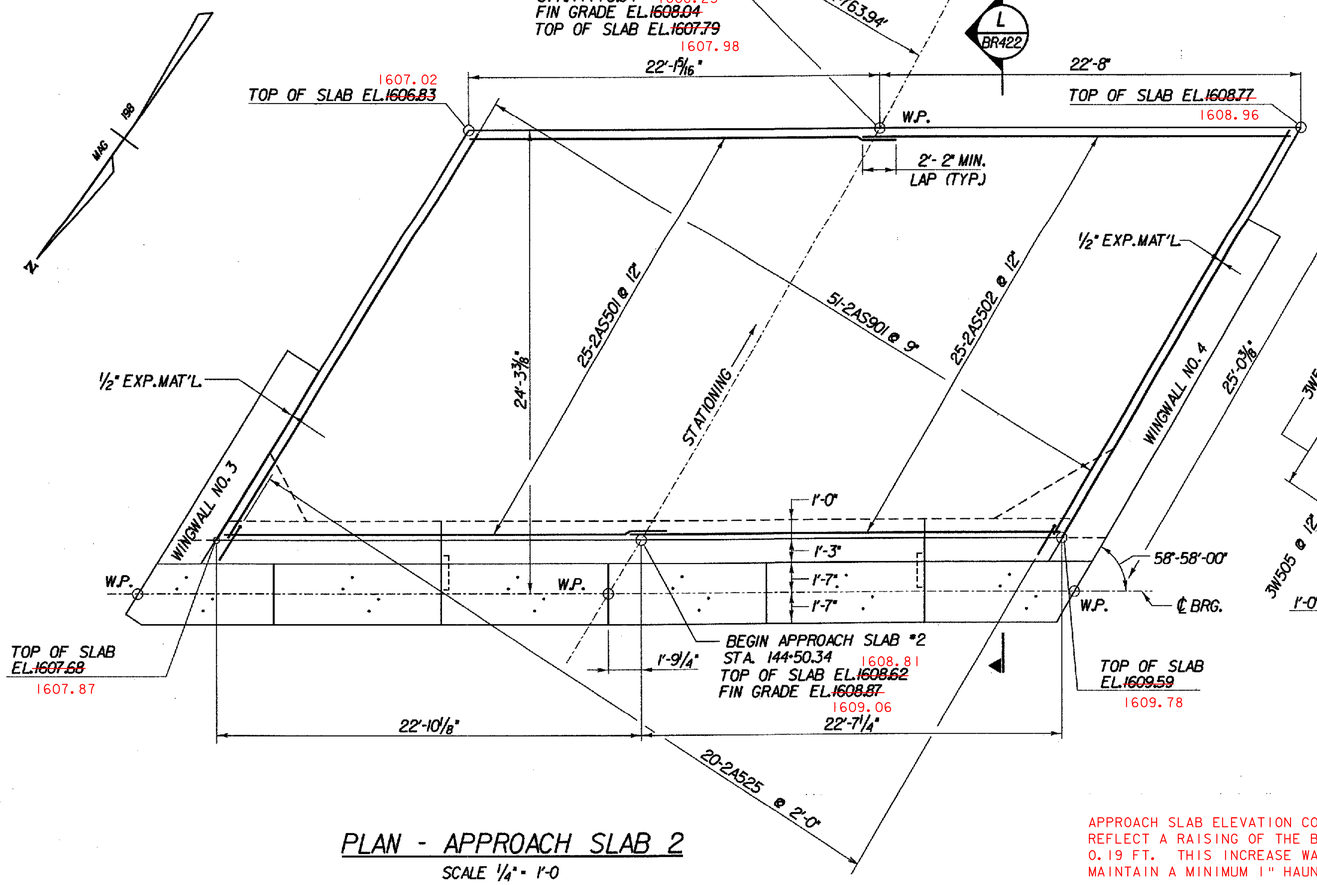

PLAN - APPROACH SLAB 2

SCALE 1/4" = 1'-0

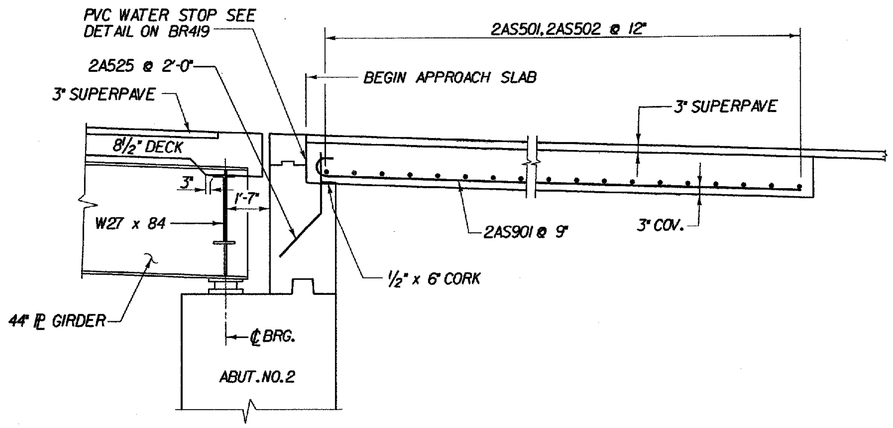

L BR422 SECTION APPROACH SLAB 2

SCALE 3/8" = 1'-0

APPROACH SLAB ELEVATION CORRECTIONS REFLECT A RAISING OF THE BRIDGE DECK 0.19 FT. THIS INCREASE WAS MADE TO MAINTAIN A MINIMUM 1" HAUNCH.

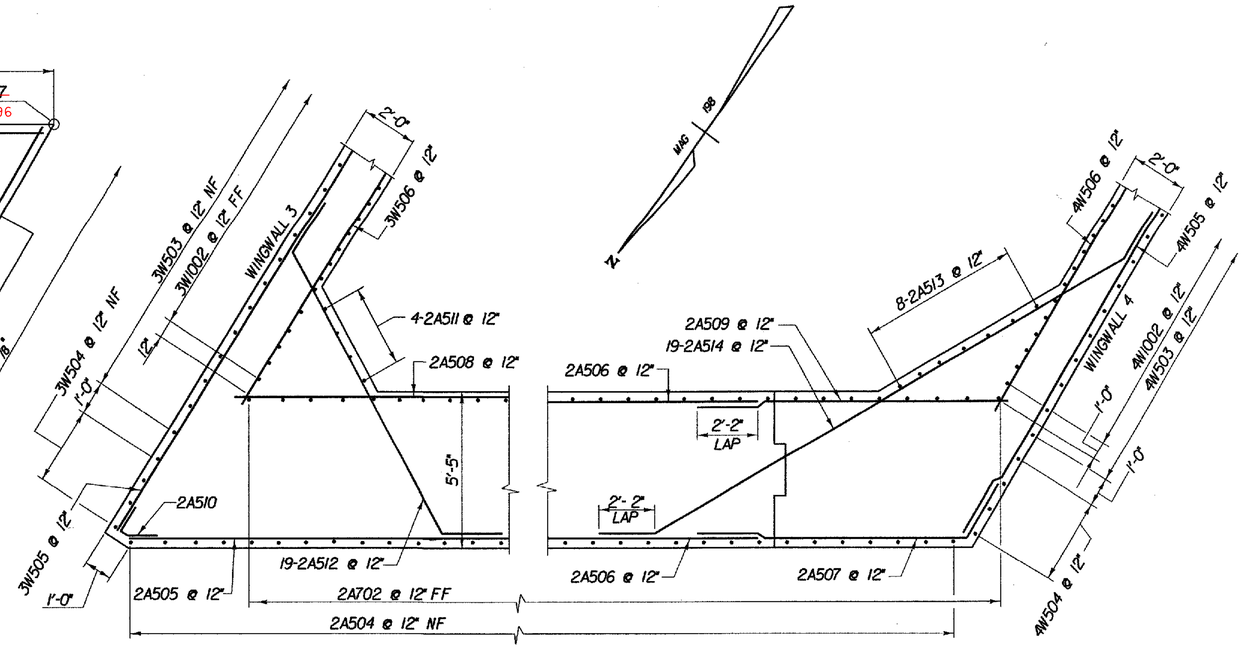

CORNER AND FILLET DETAILS ABUTMENT 2

SCALE 3/8" = 1'-0

REVISIONS: BY CLOUGH HARBOUR & ASSOC. LLP	APP'D BY:	DATE:
⚠ ABUTMENT REINFORCEMENT AND DIMENSIONS REVISED	MWO	5/18/01

McFARLAND-JOHNSON ENGINEERS, INC.
BINGHAMTON NEW YORK

STATE OF VERMONT
AGENCY OF TRANSPORTATION

Town Of SEARSBURG	Bridge No. 25B
	Log Sta.
Highway No. VT. RTE. 9	Surv. Sta. 143+11

VT. RTE. 9 OVER DEERFIELD RIVER

APPROACH SLAB 2 DETAILS

Designed By D. VIENI	Drawn By J. LAGONE
Checked By M. OLSTAD Date 5/2001	Bridge Design Supervisor M. OLSTAD Date
PROJECT SEARSBURG - WILMINGTON	PROJECT NO. NHF 010-1(18)
I.G.C. Info.	
Bridge Sheet No. BR422	Sheet 228 of 435

APPSLAB2.DGN

FILE NAME = u:\9755\MSTN\15\BR0225R\25b_appslab2.plt
DATE/TIME = 12/12/01
USER = 2225

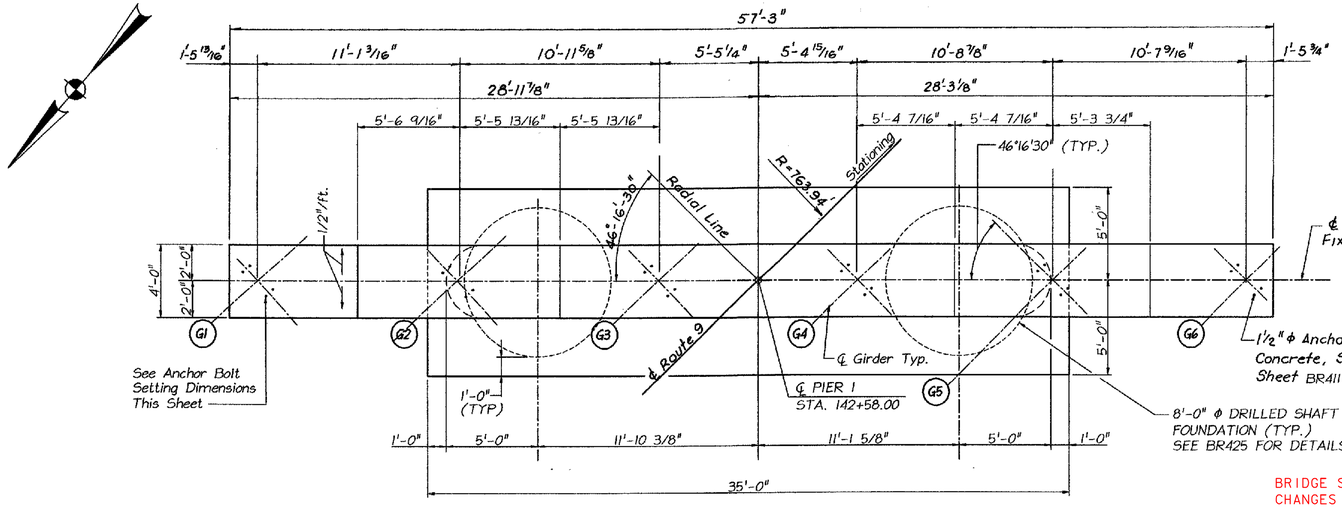

PLAN
Scale: 1/4"=1'-0"

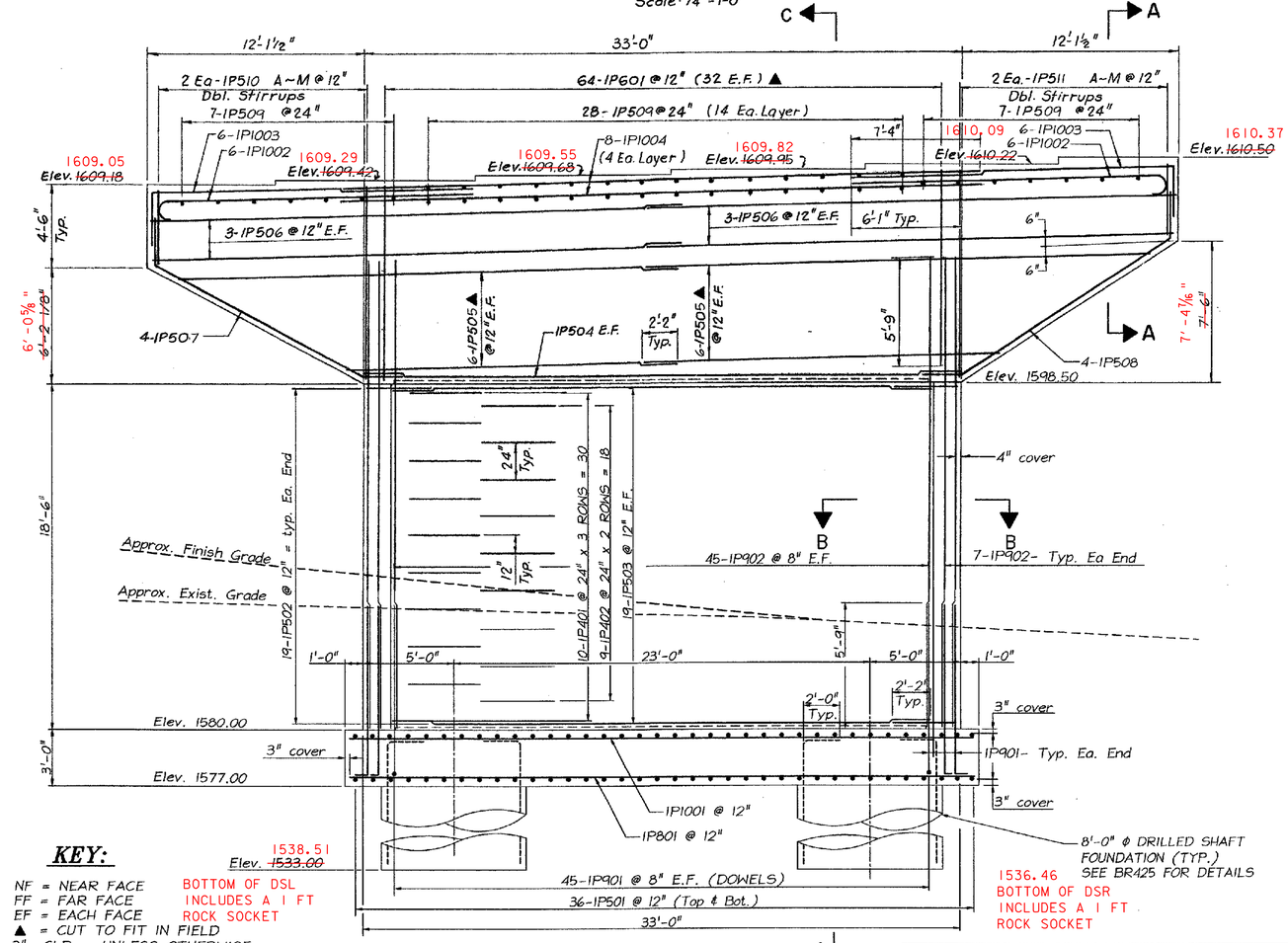

KEY:

NF = NEAR FACE
FF = FAR FACE
EF = EACH FACE
▲ = CUT TO FIT IN FIELD
3" CLR. UNLESS OTHERWISE SPECIFIED ON THE PLANS.

BOTTOM OF DSL
INCLUDES A 1 FT
ROCK SOCKET

ELEVATION
Scale: 1/4"=1'-0"

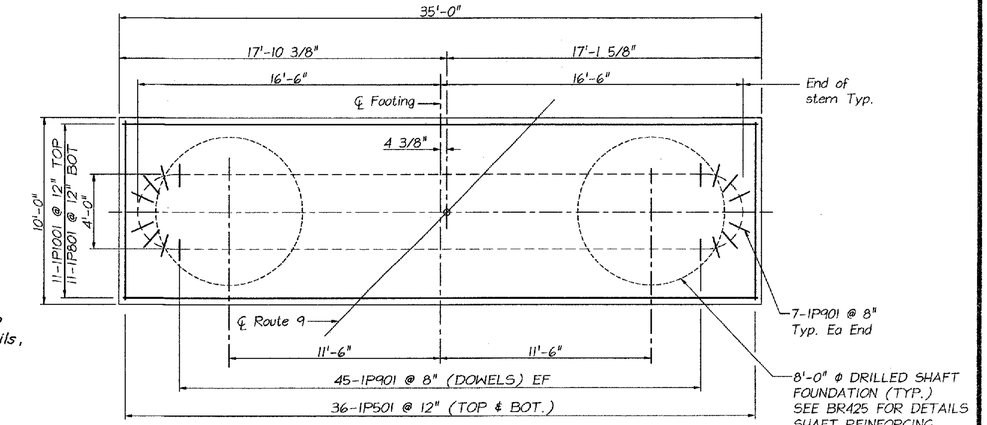

FOOTING PLAN
Scale: 1/4" = 1'-0"

BRIDGE SEAT ELEVATION CHANGES REFLECT BEARING DESIGN CHANGE FROM STRUCTURES.

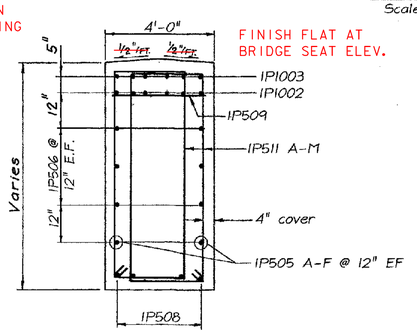

FINISH FLAT AT BRIDGE SEAT ELEV.

SECTION A-A
(NOT TO SCALE)

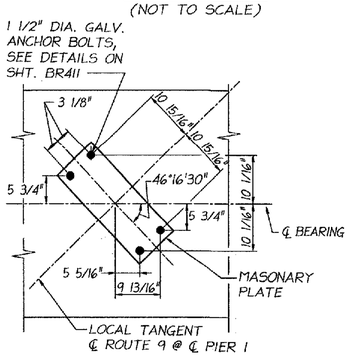

PLAN-ANCHOR BOLT LAYOUT
(NOT TO SCALE)

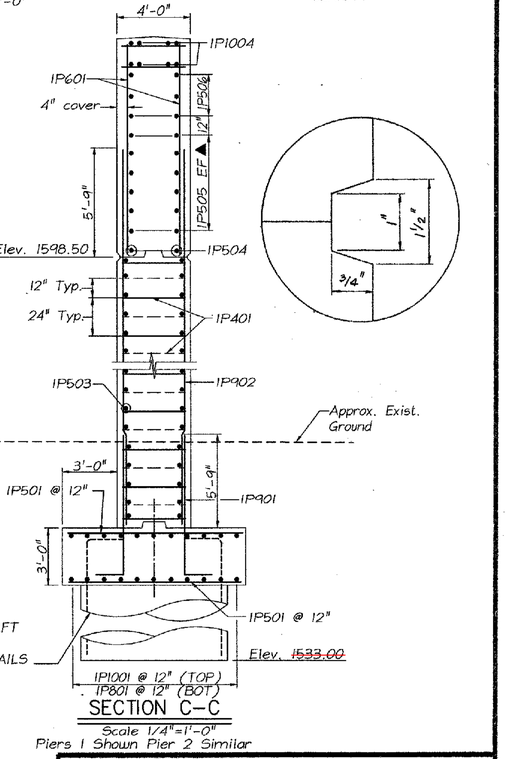

SECTION C-C
Scale 1/4"=1'-0"
Piers 1 Shown Pier 2 Similar

NOTES:

1. Major Chord not shown on plan. For Major Chord Layout, see sheet BR406.
2. Adjust horizontal spacing of 1P1002, 1P1003 & P1004 to provide clearance for cast-in place anchor bolts.
3. For Section B-B See BR424.

Revisions: by CLOUGH HARBOUR & ASSOC. LLP	App'd. By:	Date:
⚠ PIER FOUNDATION, STEM AND ELEVATIONS REVISED	MWO	6/01

McFARLAND-JOHNSON ENGINEERS, INC.

STATE OF VERMONT
AGENCY OF TRANSPORTATION

Town Of SEARSBURG	Bridge No. 25B
Highway No. VT. ROUTE 9	Log Sta. / Surv. Sta. 143+11
VT. ROUTE 9 OVER DEERFIELD RIVER	
PIER 1 PLAN AND ELEVATION	
Designed By RPJ	Drawn By JJM
Checked By RPJ Date 11-85	Bridge Design Supervisor WTS Date 9/85
PROJECT SEARSBURG-WILMINGTON	PROJECT NO. F010-1(18)
I.C.C. Info.	
Bridge Sheet No. BR423	Sheet 229 of 435

M.J. Job No. 83-3302.0
M.J. Br. No. 2
M.J. Sht. No. 40

DRUNING 62165

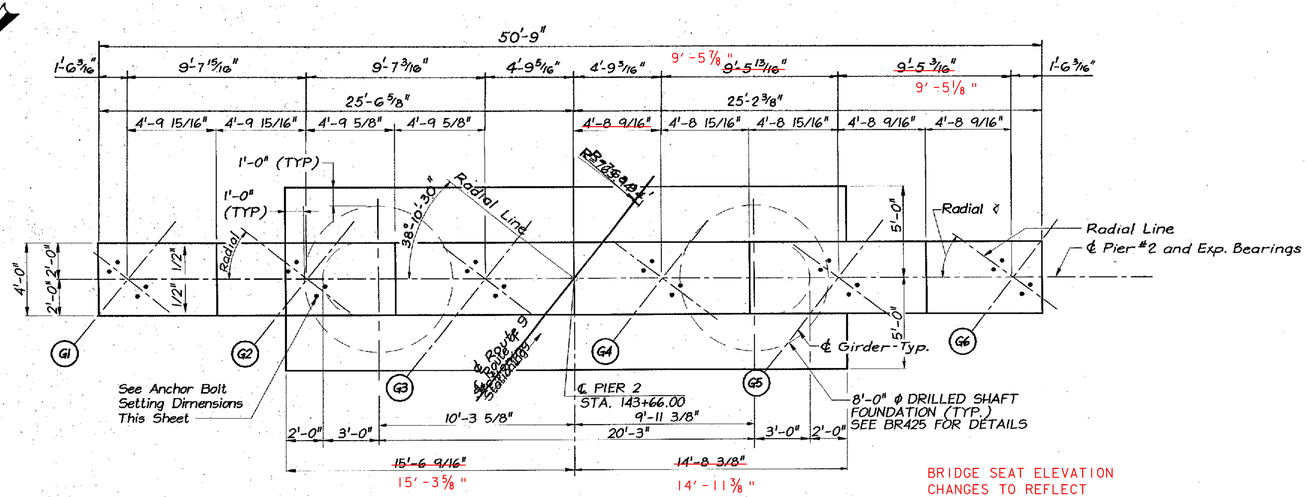

PLAN
Scale: 1/4" = 1'-0"

BRIDGE SEAT ELEVATION CHANGES TO REFLECT BEARING DESIGN CHANGE BY STRUCTURES.

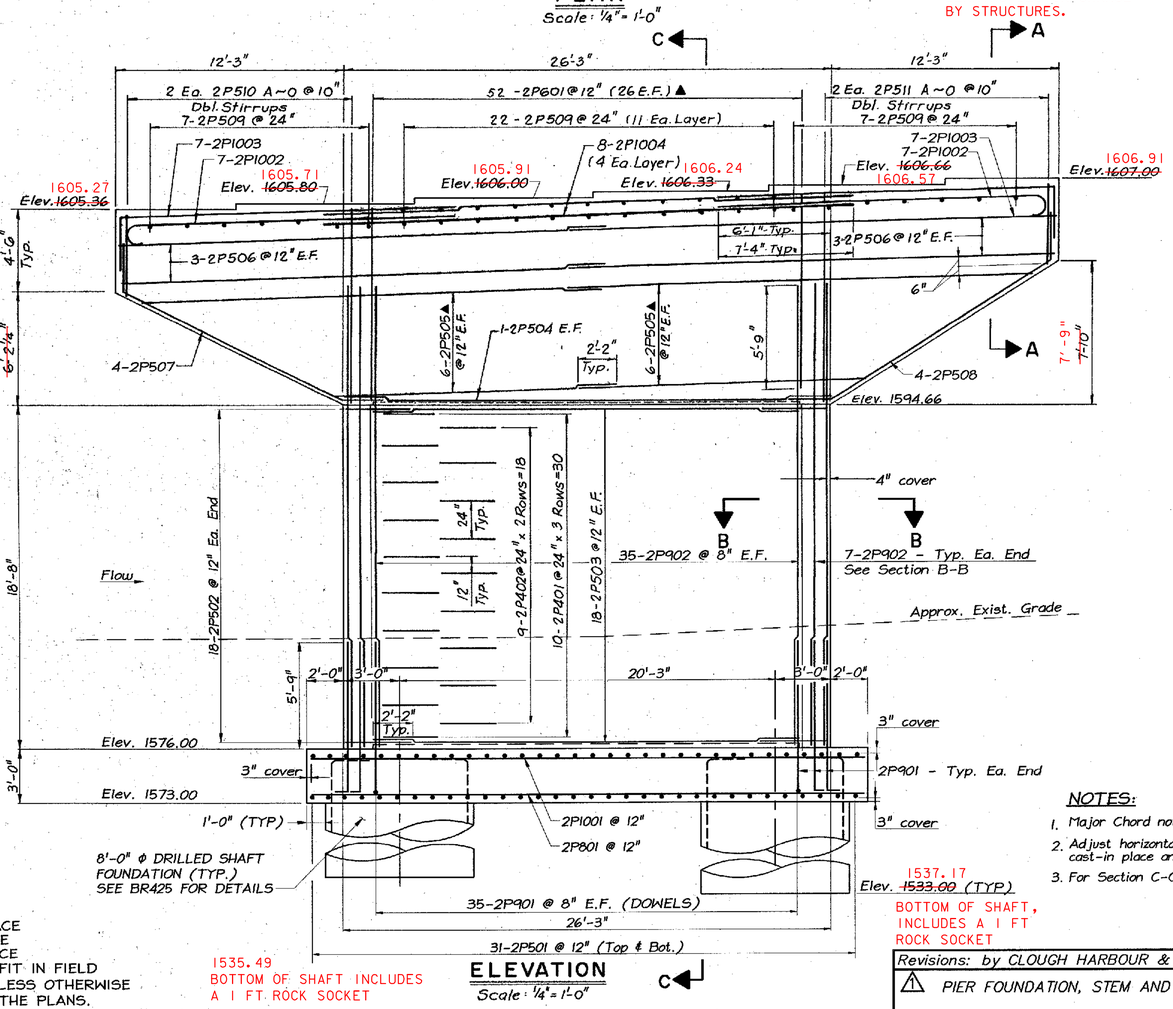

ELEVATION
Scale: 1/4" = 1'-0"

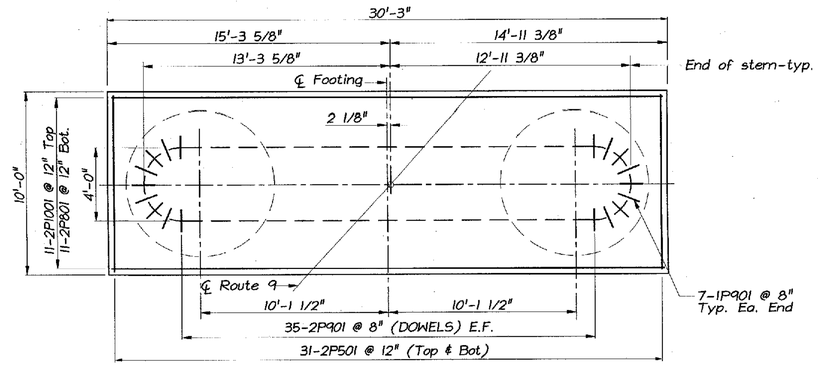

FOOTING PLAN
Scale: 3/16" = 1'-0"

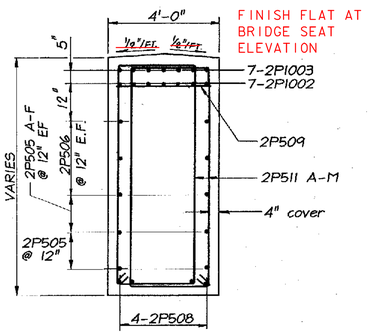

FINISH FLAT AT BRIDGE SEAT ELEVATION

SECTION A-A
(Not to scale)

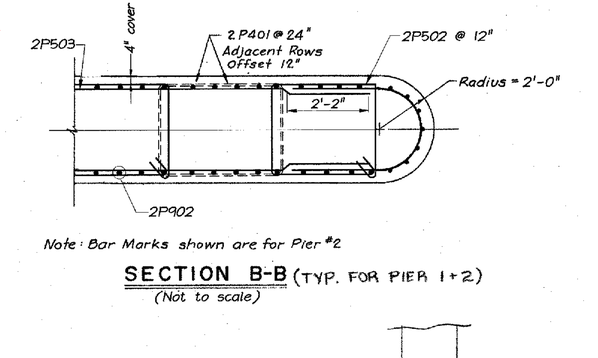

Note: Bar Marks shown are for Pier #2

SECTION B-B (TYP. FOR PIER 1+2)
(Not to scale)

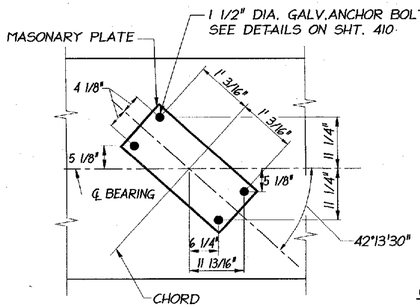

PLAN—ANCHOR BOLT LAYOUT
(Not to scale)

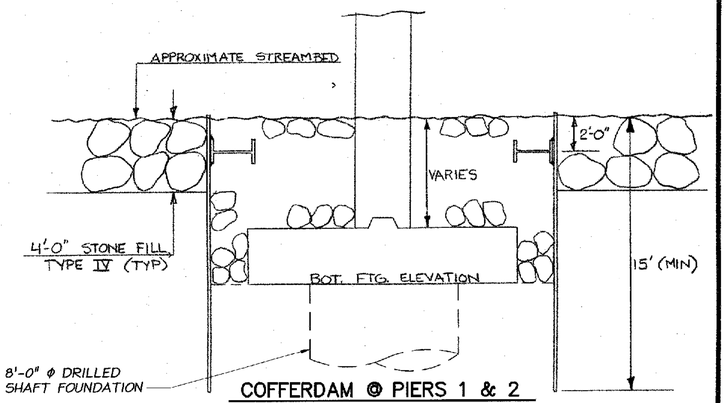

COFFERDAM @ PIERS 1 & 2
(Not to scale)

COFFERDAM NOTE:
COFFERDAM SIZE TO BE DETERMINED BY THE CONTRACTOR.

THE PAY LIMITS OF COFFERDAM EXCAVATION, ROCK" SHALL BE 5'-0" OUTSIDE THE PERIMETER OF THE FOOTING.

IF A COFFERDAM IS CONSTRUCTED WHICH IS LARGER THAN THE COFFERDAM EXCAVATION PAY LIMITS, PAYMENT FOR ALL UNCLASSIFIED CHANNEL EXCAVATION, INCLUDING THAT PORTION WHICH IS INSIDE THE COFFERDAM BUT OUTSIDE THE COFFERDAM EXCAVATION PAY LIMITS, WILL BE MADE AT THE CONTRACT UNIT PRICE FOR UNCLASSIFIED CHANNEL EXCAVATION.

NOTES:
1. Major Chord not shown on plan. For Major Chord Layout, see sheet br406.
2. Adjust horizontal spacing of 1P1002, 1P1003 & P1004 to provide clearance for cast-in place anchor bolts.
3. For Section C-C See BR423.

KEY:
NF = NEAR FACE
FF = FAR FACE
EF = EACH FACE
▲ = CUT TO FIT IN FIELD
3" CLR. UNLESS OTHERWISE SPECIFIED ON THE PLANS.

Revisions: by CLOUGH HARBOUR & ASSOC.	App'd. By:	Date:
⚠ PIER FOUNDATION, STEM AND ELEVATIONS REVISED	MWO	5/18/01

McFARLAND - JOHNSON ENGINEERS, INC.

STATE OF VERMONT
AGENCY OF TRANSPORTATION

Town Of SEARSBURG	Bridge No. 25B
Highway No. VT. ROUTE 9	Log Sta. Surv. Sta. 143+11
VT. ROUTE 9 OVER DEERFIELD RIVER	
PIER 2 PLAN AND ELEVATION	
Designed By JJM	Drawn By JJM
Checked By RPJ Date 11-85	Bridge Design Supervisor WTS Date 9/85
PROJECT SEARSBURG-WILMINGTON	PROJECT NO. F010-1(18)
L.G.C. Info.	
Bridge Sheet No. BR424	Sheet 230 of 435

M.J. Sht. No. 41

BRUNING 52165

BR-6

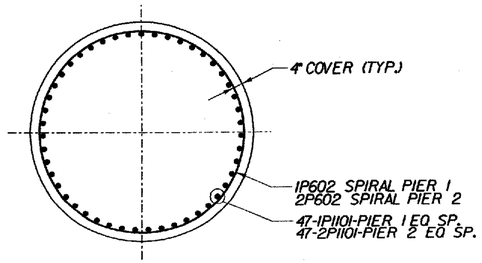

A BR425 8'Ø SHAFT SECTION

SCALE 3/8" = 1'-0

1 0 1 2 3 4

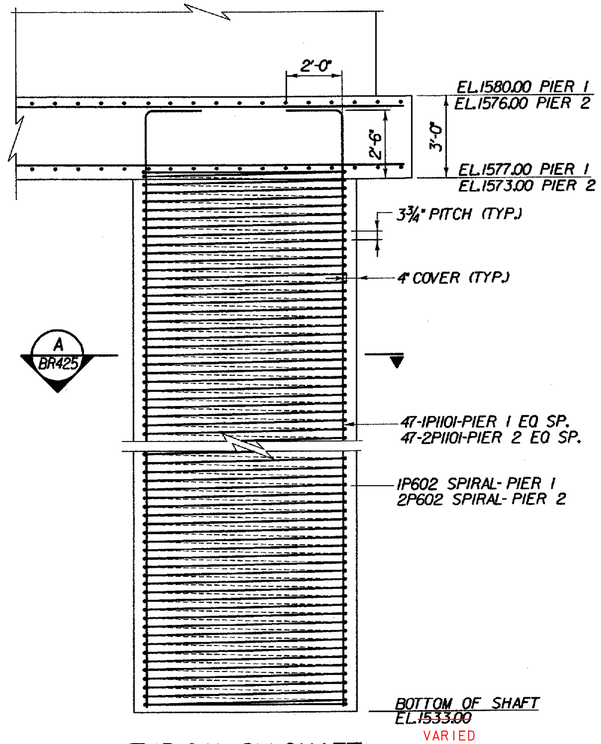

TYPICAL 8'Ø SHAFT

SCALE 3/8" = 1'-0

1 0 1 2 3 4

STATE OF VERMONT
AGENCY OF TRANSPORTATION

Town Of	SEARSBURG	Bridge No. 25B
		Log Sta.
Highway No.	VT. RTE. 9	Surv. Sta.

VT. RTE. 9 OVER DEERFIELD RIVER

DRILLED SHAFT DETAILS - BR 25B

Designed By D. VIENI	Drawn by K. DETRICK/Wm WEATHERBY
Checked By M. OLSTAD Date 12/2001	Bridge Design Supervisor M. OLSTAD Date 12/2001
PROJECT SEARSBURG - WILMINGTON	PROJECT NO. NHF 010-1(18)
I.G.C. Info.	
Bridge Sheet No. BR425	Sheet 231 OF 435

CLOUGH, HARBOUR & ASSOCIATES LLP
ENGINEERS, SURVEYORS, PLANNERS & LANDSCAPE ARCHITECTS
11 WINNERS CIRCLE ALBANY, NEW YORK, 12205

FILE NAME =u:\9755\MSTN\15\BROG25B\25B_drlshaft.PLT
DATE/TIME =12/12/01
USER =2225

ITEM	NO. PIECES	SIZE	LENGTH	MARK	TYPE	A	B	C	D	E	F	G	H	J	K	R	O
1	ABUTMENT 1																
2	34	5	33'-10	1A501 ▲	STR.												
3	34	5	45'-0	1A502	STR.												
4	71	5	3'-8	1A503 △	STR.												
5	68	5	25'-0	1A504 ▲	STR.												
6	26	5	25'-6	1A505	STR.												
7	52	5	38'-2	1A506	STR.												
8	26	5	13'-0	1A507	22			10'-8	2'-4				1'-3⅜		1'-11½		
9	26	5	11'-6	1A508	STR.												
10	26	5	12'-8	1A509	STR.												
11	71	5	9'-0	1A510	S10		2'-0	5'-0	2'-0								
12	26	5	4'-8	1A511	16		2'-0	7½	2'-0				1'-6½		1'-3¼		
13	9	5	25'-0	1A512 ▲	STR.												
14	26	5	16'-3	1A513	22		2'-2	11'-11	2'-2	2'-0½	8¾		2'-0½		8¾		13'-4¼
15	26	5	28'-1	1A514	22			24'-10	2'-2				7½		2'-1		
16	4	5	25'-9	1A515 ▲	STR.												
17	4	5	36'-0	1A516	STR.												
18	4	5	12'-11	1A517 ▲	STR.												
19	68	5	8'-8	1A518	S10		2'-0	9	5'-10½								
20	21	5	4'-0	1A519	22		2'-4		1'-7½				1'-2¾		1'-2¾		
21	66	5	12'-2	1A520	17		4'-2½	1'-9	6'-2½								
22	5	5	22'-4	1A521	22		11	21'-5		8½	7						
23	10	5	35'-8	1A522	STR.												
24	5	5	15'-3	1A523	19			11'-4¼	2'-3¼				1'-10¾		1'-3		
25	4	5	18'-8	1A524	STR.												
26	4	5	15'-5	1A525	STR.												
27	1	5	20'-10	1A526	22		1'-10	18'-11½		1'-5	1'-2						
28	1	5	15'-3	1A527	19			11'-2	1'-8				1'-5		11		
29	8	5	6'-6	1A528	S10		2'-0	2'-6	2'-0								
30	77	7	15'-11	1A701 ▲△	STR.												
31	176	8	12'-7	1A801	17		1'-5	13'-4½									
32	89	8	27'-7	1A802 ▲	STR.												
33	149	9	15'-11	1A901 ▲	STR.												
34																	
35	WINGWALL 1																
36	32	5	31'-2	1W501 ▲	STR.												
37	84	5	3'-8	1W502 △	STR.												
38	34	5	27'-6½	1W503	STR.												
39	3	5	29'-0 1/2	1W504	STR.												
40	5	5	25'-1	1W505	STR.												
41	52	5	18'-3	1W506	STR.												
42	26	5	25'-8	1W507	STR.												
43	26	5	13'-9 1/2	1W508	STR.												
44	35	5	8'-7 1/2	1W509 ▲	STR.												
45	33	5	7'-6	1W510	S10		2'-0	3'-6	2'-0								
46	34	5	6'-7	1W511 ▲	STR.												
47	14	5	18'-3	1W512	STR.												
48	7	5	20'-4	1W513 ▲	STR.												
49	7	5	11'-4	1W514	STR.												
50	2	5	18'-3	1W515	STR.												
51	2	5	11'-0 1/2	1W516	STR.												
52	34	5	5'-6	1W517	S10		2'-0	1'-6	2'-0								
53	4	5	5'-0	1W518	S10		2'-0	1'-0	2'-0								
54	2	5	5'-6	1W519	S10		2'-0	1'-6	2'-0								
55	97	9	15'-6	1W901 △	STR.												
56	92	9	15'-11	1W902	17		1'-4	1'-7									
57	47	9	25'-1	1W903	STR												
58																	
59																	
60																	
61																	
62																	
63																	
64	WINGWALL 2																
65	32	5	30'-0	2W501	STR.												
66	32	5	31'-0	2W502 ▲	STR.		3'-6	1'-0									
67	119	5	3-8	2W503 △	STR												
68	54	5	26'-7	2W504	STR.												
69	3	5	28'-1	2W505	STR.												
70	2	5	24'-2	2W506	STR.												
71	50	5	28'-4	2W507	STR.												
72	25	5	32'-1	2W508	STR.												
73	25	5	26'-0	2W509	STR.												
74	54	5	9'-3	2W510	STR												
75	53	5	7'-6	2W511 ▲	S10.		2'-0	3'-6	2'-0								
76	16	5	28'-4	2W512	STR.												
77	8	5	30'-2	2W513	STR.												
78	8	5	25'-8	2W514	STR												
79	4	5	4'-0	2W515	19		2'-0	2'-0					1'-1		1'-8		3'-8
80	2	5	5'-6	2W516	S10.		2'-0	1'-6	2'-0								
81	55	5	5'-6	2W517	STR.												
82	55	5	7'-2	2W518	S10.		2'-0	1'-5¼	2'-0								
83	2	5	27'-4	2W519	STR.												
84	2	5	28'-1	2W520	STR.												
85	172	9	15'-6	2W901 △	STR												
86	164	9	15'-9	2W902	17		14'-2	1'-7"									
87	82	9	24'-2	2W903	STR.												
88																	
89																	
90																	
91																	
92																	
93																	
94																	
95																	
96																	
97																	

ITEM	NO. PIECES	SIZE	LENGTH	MARK	TYPE	A	B	C	D	E	F	G	H	J	K	R	O
98	ABUTMENT 2																
99	24	5	24'-5	2A501	STR.												
100	24	5	33'-1	2A502 ▲	STR.												
101	53	5	3'-8	2A503 △	STR.												
102	51	5	18'-0 1/2	2A504 ▲	STR.												
103	19	5	18'-6 1/2	2A505	STR.												
104	38	5	25'-6	2A506	STR.												
105	19	5	11'-5 1/2	2A507	22			9'-3½	2'-2						1'-10½		1'-1¼
106	19	5	14'-6	2A508	STR.												
107	19	5	10'-9 1/2	2A509	STR.												
108	18	5	2'-7 1/4	2A510	12		1'-0	7⅛	1'-0						10		6¼
109	4	5	16'-2	2A511	STR.												
110	19	5	15'-11 3/4	2A512	22		2'-2	11'-7⅜	2'-2	1'-10⅝	1'-0⅝				1'-10⅜		1'-0⅜	13'-9
111	8	5	13'-0 1/2	2A513	STR.												
112	19	5	24'-11	2A514	22		2'-2	20'-9	2'-2	1'-0¾	1'-10⅛				1'-0¾		1'-10⅝	24'-3¾
113	53	5	9'-0	2A515	S10		2'-0	5'-0	2'-0								
114	47	5	10'-9½	2A516	17		7'-2	9	2'-10½								
115	4	5	19'-1 1/2	2A517 ▲	STR.												
116	4	5	25'-6	2A518	STR.												
117	4	5	11'-2	2A519	STR.												
118	12	5	15'-11 1/2	2A520 ▲	STR.												
119	12	5	25'-6	2A521	STR.												
120	12	5	8'-9	2A522 ▲	STR.												
121	48	5	7'-11	2A523	17		2'-0	1'-10	4'-1								
122	20	5	4'-0	2A524	22			2'-4½	1'-7½						1'-2½		1'-1⅜
123	58	6	10'-11	2A601 ▲△	STR.												
124	94	7	10'-3	2A701	17		1'-7	8'-8									
125	48	7	16'-1	2A702 ▲	STR.												
126	56	8	10'-11	2A801 ▲	STR.												
127																	
128																	
129																	
130	WINGWALL 3																
131	24	5	11'-0	3W501 ▲	STR.												
132	35	5	3'-8	3W502 △	STR.												
133	13	5	21'-6	3W503 ▲	STR.												
134	4	5	16'-3	3W504	STR.												
135	18	5	12'-10	3W505	STR.												
136	18	5	9'-7	3W506	STR.												
137	14	5	12'-5	3W507 ▲	STR.												
138	7	5	5'-8	3W508 ▲	16		2'-0	1'-8	2'-0	1'-8¼	1'-0⅞				1'-8¼		1'-0⅞
139	13	5	5'-5	3W509	S10.		2'-0	1'-5	2'-0								
140	2	5	12'-0	3W510	STR												
141	37	8	10'-6	3W801 △	STR.												
142	20	10	13'-5	3W1001	17		1'-10	11'-7									
143	10	10	21'-6	3W1002 ▲	STR.												
144																	
145																	
146																	
147																	
148	WINGWALL 4																
149	22	5	24'-11	4W501 ▲	STR.												
150	48	5	3'-8	4W502 △	STR.												
151	20	5	23'-5	4W503 ▲	STR.												
152	4	5	18'1	4W504	STR.												
153	19	5	22'-11	4W505	STR.												
154	19	5	18'-3	4W506	STR.												
155	14	5	20'-5	4W507 ▲	STR.												
156	6	5	5'-8	4W508 ▲	28		2'-0	1'-8	2'-0	1'-8½	1'-0⅝		1'-8½		1'-0⅝		
157	20	5	5'-5	4W509	S10		2'-0	1'-5	2'-0								
158	2	5	14'-6	4W510	STR.												
159	61	8	10'-6	4W801 △	STR.												
160	39	10	13'-5	4W1001	17		1'-10	11'-7									
161	19	10	23'-5	4W1002 ▲	STR.												
162																	
163																	
164																	
165																	
166																	
167																	
168																	
169																	
170																	
171																	
172																	
173																	
174																	
175																	
176																	
177																	
178																	
179																	
180																	
181																	
182																	
183																	
184																	
185																	
186																	
187																	
188																	
189																	
190																	
191																	
192																	
193																	
194																	

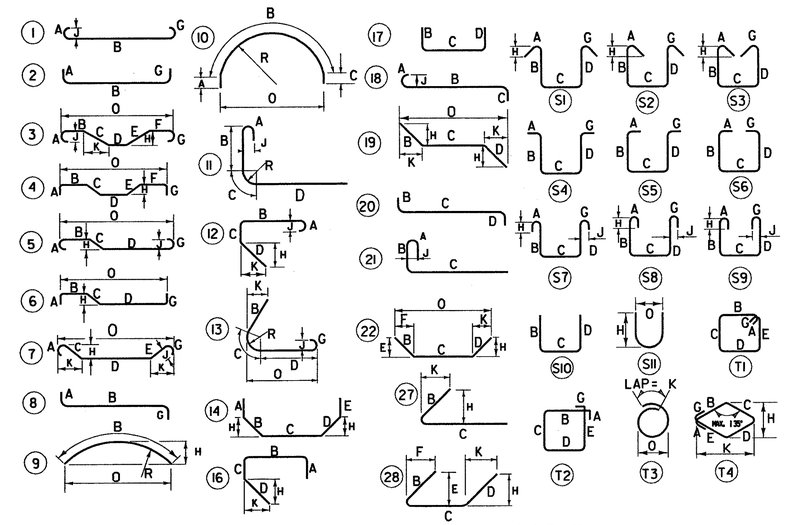

NOTES:

1. UNLESS OTHERWISE DESIGNATED, ALL BAR REINFORCEMENT FOR CONCRETE IN SIZES UP TO AND INCLUDING NO. 18 SHALL CONFORM TO THE REQUIREMENTS OF THE "SPECIFICATIONS FOR DEFORMED BILLET-STEEL BARS FOR CONCRETE REINFORCEMENT", AASHTO M 31 (ASTM A 615-S1). ALL BARS SHALL BE GRADE 60, UNLESS OTHERWISE DESIGNATED.
2. FOR TYPICAL BENDING DETAILS, RECOMMENDED PIN DIAMETER "D" OF BENDS AND HOOKS, AND OTHER STANDARD PRACTICE, SEE CURRENT CONCRETE REINFORCING STEEL INSTITUTE "MANUAL OF STANDARD PRACTICE".
3. BARS WHICH REQUIRE MORE ACCURATE BENDING THAN STANDARD PRACTICES SHOULD HAVE LIMITS INDICATED.
4. ALL DIMENSIONS ARE OUT TO OUT OF BAR EXCEPT "A" AND "G" ON STANDARD 180 DEGREE AND 135 DEGREE HOOKS.
5. "J" DIMENSION ON 180 DEGREE HOOKS TO BE SHOWN ONLY WHERE NECESSARY TO RESTRICT HOOK SIZE. OTHERWISE, STANDARD HOOKS ARE TO BE USED.
6. "H" DIMENSION ON STIRRUPS TO BE SHOWN ONLY WHEN NECESSARY TO MAINTAIN CLEARANCES.
7. WHERE SLOPE DIFFERS FROM 45 DEGREES, DIMENSIONS "H" AND "K" MUST BE SHOWN.
8. ▲ DENOTES BARS TO BE CUT IN FIELD.
9. ♦ DENOTES BARS TO BE BENT IN FIELD.
10. ✳ DENOTES ONE EXTRA BAR ADDED FOR TESTING PURPOSES.
11. △ DENOTES TWO EXTRA BARS ADDED FOR TESTING PURPOSES.
12. "E" IN PREFIX DENOTES EPOXY COATED REINFORCING STEEL.

ASTM STANDARD REINFORCING BARS

BAR SIZE DESIGNATION	WEIGHT POUNDS PER FOOT	NOMINAL DIMENSIONS ROUND SECTION		
		DIAMETER INCHES	CROSS SECTIONAL AREA SQ. INCHES	PERIMETER INCHES
#3	.376	.375	.11	1.178
#4	.668	.500	.20	1.571
#5	1.043	.625	.31	1.963
#6	1.502	.750	.44	2.356
#7	2.044	.875	.60	2.749
#8	2.670	1.000	.79	3.142
#9	3.400	1.128	1.00	3.544
#10	4.303	1.270	1.27	3.990
#11	5.313	1.410	1.56	4.430
#14	7.65	1.693	2.25	5.32
#18	13.60	2.257	4.00	7.09

STATE OF VERMONT
AGENCY OF TRANSPORTATION

Town Of SEARSBURG	Bridge No. 25B
Highway No. VT. RTE. 9	Log Sta.
	Surv. Sta.

VT. RTE. 9 OVER DEERFIELD RIVER

REINFORCING STEEL SCHEDULE 1 - BR 25B

Designed By D. VIENI	Drawn by K. DETRICK
Checked By M. OLSTAD Date 12/2001	Bridge Design Supervisor M. OLSTAD Date 12/2001
PROJECT SEARSBURG - WILMINGTON	PROJECT NO. NHF 010-1(18)
I.G.C. Info.	
Bridge Sheet No. BR426	Sheet 232 OF 435

CHA CLOUGH, HARBOUR & ASSOCIATES LLP
ENGINEERS, SURVEYORS, PLANNERS & LANDSCAPE ARCHITECTS
11 WINNERS CIRCLE ALBANY, NEW YORK, 12205

FILE NAME = a:\9755\WSTN\15\BR00259\259_berlist.PLT
DATE/TIME = 12/18/01
USER = 564

ITEM	NO. PIECES	SIZE	LENGTH	MARK	TYPE	A	B	C	D	E	F	G	H	J	K	R	O
1	APPROACH SLAB 1																
2	27	5	34'-1	E1AS501 △	STR.												
3	25	5	36'-0	E1AS502	STR.												
4	61	9	27'-7	E1AS901 △	1	1'-3	26'-4							1'-3			
5																	
6																	
7	APPROACH SLAB 2																
8	27	5	22'-11	E2AS501 △	STR.												
9	25	5	23'-6	E2AS502	STR.												
10	53	9	25'-9	E2AS901 △	1	1'-3	24'-5							1'-0			
11																	
12																	
13																	
14																	
15																	
16	PIER 1																
17	30	4	20'-11	IP401	T1	4 1/2	6'-8⅝	3'-4	6'-8⅝	3'-4		4 1/2					
18	20	4	16'-11	IP402 △	T1	4 1/2	4'-8⅝	3'-4	4'-8⅝	3'-4		4 1/2					
19	72	5	9'-6	IP501	STR.												
20	38	5	10'-9⅜	IP502	S11								4'-6¼				3'-0¾
21	38	5	27'-4	IP503	STR.												
22	2	5	33'-0	IP504	STR.												
23	24	5	29'-5	IP505 ▲	STR.												
24	12	5	29'-4½	IP506	STR.												
25	4	5	18'-2½	IP507	22		2'-2	13'-5½	2'-7	11¾	1'-11¼		2'-3⅝		1'-2⅛		15'-7¾
26	4	5	17'-5¼	IP508	22		2'-7	14'-1	2'-2	2'-2⅜	1'-4⅝		1'-5⅛		1'-10		
27	44	5	3'-4	IP509 △	STR												
28																	
29	2 EA	5	13'-7	IP510A	T1	4½	2'-7¼	3'-9⅜	2'-7¼	3'-9⅜		4½					
30			TO	THRU				TO		TO	VARY IN 12 EQ. INCREMENTS						
31	2 EA	5	26'-5½	IP510M	T1	4½	2'-7¼	10'-2¼	2'-7¼	10'-2¼		4½					
32																	
33	2 EA	5	13'-8½	IP511A	T1	4½	2'-7¼	3'-10½	2'-7¼	3'-10½		4½					
34			TO	THRU				TO		TO	VARY IN 12 EQ. INCREMENTS						
35	2 EA	5	27'-6¼	IP511M	T1	4½	2'-7¼	10'-9⅜	2'-7¼	10'-9⅜		4½					
36																	
37	64	6	11'-4¼	IP601 ▲	STR.												
38	11	8	34'-6	IP801	STR.												
39	104	9	9'-11	IP901	2	1'-7	8'-5										
40	104	9	24'-6	IP902	STR.												
41	11	10	34'-6	IP1001	STR.												
42	12	10	20'-7	IP1002	1	1'-5	19'-2							1'-1¼			
43	12	10	21'-2½	IP1003	17		3'-0	19'-7									
44	8	10	33'-0	IP1004	STR.												
45																	
46	DRILLED SHAFTS (PIER 1)																
47	118	6	60'-0	IP602 △	STR.												
48	96	11	48'-6	IP1101 △	2	2'-0	46'-6										
49																	
50																	
51																	
52	PIER 2																
53	32	4	15'-6	2P401 △	T1	4½	4'-0⅜	3'-4	4'-0⅜	3'-4		4½					
54	18	4	18'-2	2P402	T1	4½	5'-4⅛	3'-4	5'-4⅛	3'-4		4½					
55	62	5	9'-6	2P501	STR.												
56	36	5	10'-11	2P502	S11								4'-6¼				3'-0¾
57	36	5	21'-11	2P503	STR.												
58	2	5	26'-3	2P504	STR.												
59	24	5	25'-7	2P505 ▲	STR.												
60	12	5	26'-2	2P506	STR.												
61	4	5	18'-2	2P507	22		2'-7	13'-5¼	2'-2	2'-3⅝	1'-2		11¾		1'-11¼		16'-7⅛
62	4	5	19'-0	2P508	22		2'-2	14'-3⅛	2'-7	1'-2	1'-8⅛		2'-2⅛		1'-4¾		17'-6
63	38	5	3'-3	2P509 △	STR.												
64																	
65	2 EA	5	13'-6	2P510A	T1	4½	2'-7¼	3'-9¼	2'-7¼	3'-9¼		4½					
66			TO	THRU				TO		TO	VARY IN 12 EQ. INCREMENTS						
67	2 EA	5	26'-1	2P510o	T1	4½	2'-7¼	10'-0½	2'-7¼	10'-0½		4½					
68																	
69	2 EA	5	13'-6	2P511A	T1	4½	2'-7¼	3'-9¼	2'-7¼	3'-9¼		4½					
70			TO	THRU				TO		TO	VARY IN 12 EQ. INCREMENTS						
71	2 EA	5	27'-8	2P511o	T1	4½	2'-7¼	11'-8¼	2'-7¼	11'-8¼		4½					
72																	
73	52	6	11'-5	2P601 ▲	STR.												
74	11	8	29'-9	2P801	STR.												
75	84	9	9'-11	2P901	2	1'-6¾	8'-4½										
76	84	9	24'-5	2P902	STR.												
77	11	10	29'-9	2P1001	STR.												
78	14	10	20'-8	2P1002	1	1'-5	18'-2½										
79	14	10	21'-3	2P1003	17		3'-0	18'-3						1'-1¼			
80	8	10	26'-3	2P1004	STR.												
81																	
82	DRILLED SHAFTS (PIER 2)																
83	108	6	60'-0	2P602 △	STR.												
84	96	11	44'-6	2P1101 △	2	2'-0	42'-6										
85																	
86																	
87																	
88																	
89																	
90																	
91																	
92																	
93																	
94																	
95																	
96																	
97																	

ITEM	NO. PIECES	SIZE	LENGTH	MARK	TYPE	A	B	C	D	E	F	G	H	J	K	R	O
98	DECK SLAB																
99	556	5	42'-2	ES501	STR.												
100	1112	5	22'-9	ES502	1	0'-7	22'-2								0'-5		
101	365	5	45'-6	ES503	STR.												
102	1 EA.	5	12'-9	ES504	STR.												
103		5	TO	THRU	STR.	VARY IN 4 EQUAL INCREMENTS											
104	1 EA.	5	14'-11	ES508	STR.												
105	411	5	22'-3	ES509	STR.												
106	2 EA.	5	21'-1	ES510	STR.												
107		5	TO	THRU	STR.	VARY IN 49 EQUAL INCREMENTS											
108	2 EA.	5	28'-7	ES559	STR.												
109	38	5	34'-10	ES560	STR.												
110	38	5	33'-8	ES561	STR.												
111	38	5	32'-8	ES562	STR.												
112	38	5	35'-8	ES563	STR.												
113	38	5	34'-9	ES564	STR.												
114	38	5	33'-11	ES565	STR.												
115	38	5	32'-2	ES566	STR.												
116	38	5	31'-10	ES567	STR.												
117	38	5	31'-5	ES568	STR.												
118	1 EA.	5	3'-6	ES569	STR.												
119		5	TO	THRU	STR.	VARY IN 106 EQUAL INCREMENTS											
120	1 EA.	5	40'-2	ES5175	STR.												
121	1 EA.	5	4'-1	ES5176	1	0'-7	3'-6								0'-5		
122		5	TO	THRU			TO	VARY IN 106 EQUAL INCREMENTS									
123	1 EA.	5	40'-9	ES5282	1	0'-7	40'-2								0'-5		
124	1 EA.	5	1'-2	ES5283	STR.												
125		5	TO	THRU		VARY IN 53 EQUAL INCREMENTS											
126	1 EA.	5	40'-2	ES5336	STR.												
127	1 EA.	5	1'-9	ES5337	1	0'-7	1'-2								0'-5		
128		5	TO	THRU			TO	VARY IN 53 EQUAL INCREMENTS									
129	1 EA.	5	40'-9	ES5390	1	0'-7	40'-2								0'-5		
130	35	5	7'-5	ES5339	16	2'-2"	0'-7	4'-1	0'-7				1'-4½		0'-10		
131	10	5	9'-2	ES5392	STR.												
132	4	5	32'-9	ES5393	STR.												
133	35	5	5'-11	ES5394	16	2'-2"	0'-10	1'-9	1'-2				0'-10¾		0'-9		
134	17	5	7'-2	ES5395 △	STR.												
135	551	5	5'-6	ES5396 △	S5	1'-3	1'-0	1'-3	1'-7			1'-0	1'-2⅝		1'-1¼		
136	1	5	50'-0	ES5397	STR.												
137																	
138																	
139	116	8	46'-0	ES801 △													
140																	
141																	
142																	
143	CURB																
144	29	5	42'-0	EC501 △	STR.												
145	30	5	40'-9	EC502 △	STR.												
146																	
147																	
148																	
149																	
150																	
151																	
152																	
153																	
154																	
155																	
156																	
157																	
158																	
159																	
160																	
161																	
162																	
163																	
164																	
165																	
166																	
167																	
168																	
169																	
170																	
171																	
172																	
173																	
174																	
175																	
176																	
177																	
178																	
179																	
180																	
181																	
182																	
183																	
184																	
185																	
186																	
187																	
188																	
189																	
190																	
191																	
192																	
193																	
194																	

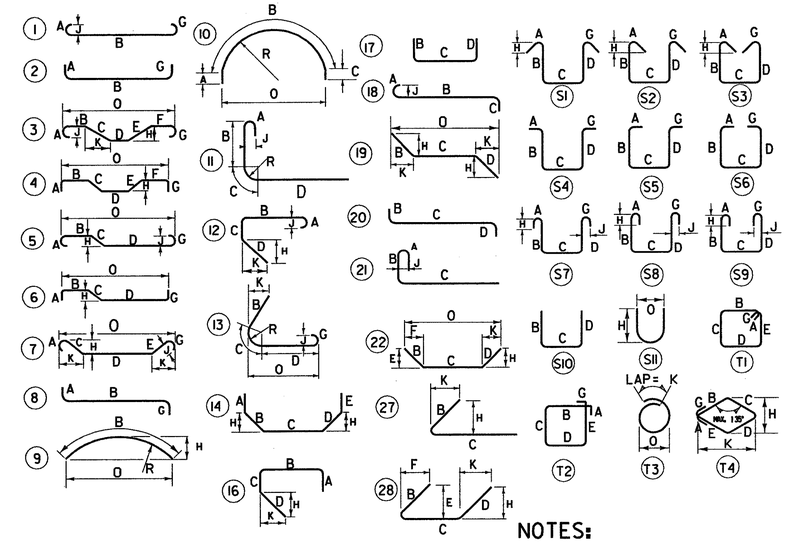

NOTES:

1. UNLESS OTHERWISE DESIGNATED, ALL BAR REINFORCEMENT FOR CONCRETE IN SIZES UP TO AND INCLUDING NO. 18 SHALL CONFORM TO THE REQUIREMENTS OF THE "SPECIFICATIONS FOR DEFORMED BILLET-STEEL BARS FOR CONCRETE REINFORCEMENT", AASHTO M 31 (ASTM A 615-91). ALL BARS SHALL BE GRADE 60, UNLESS OTHERWISE DESIGNATED.
2. FOR TYPICAL BENDING DETAILS, RECOMMENDED PIN DIAMETER "D" OF BENDS AND HOOKS, AND OTHER STANDARD PRACTICE, SEE CURRENT CONCRETE REINFORCING STEEL INSTITUTE "MANUAL OF STANDARD PRACTICE".
3. BARS WHICH REQUIRE MORE ACCURATE BENDING THAN STANDARD PRACTICES SHOULD HAVE LIMITS INDICATED.
4. ALL DIMENSIONS ARE OUT TO OUT OF BAR EXCEPT "A" AND "G" ON STANDARD 180 DEGREE AND 135 DEGREE HOOKS.
5. "J" DIMENSION ON 180 DEGREE HOOKS TO BE SHOWN ONLY WHERE NECESSARY TO RESTRICT HOOK SIZE. OTHERWISE, STANDARD HOOKS ARE TO BE USED.
6. "H" DIMENSION ON STIRRUPS TO BE SHOWN ONLY WHEN NECESSARY TO MAINTAIN CLEARANCES.
7. WHERE SLOPE DIFFERS FROM 45 DEGREES, DIMENSIONS "H" AND "K" MUST BE SHOWN.
8. ▲ DENOTES BARS TO BE CUT IN FIELD.
9. ♦ DENOTES BARS TO BE BENT IN FIELD.
10. ✱ DENOTES ONE EXTRA BAR ADDED FOR TESTING PURPOSES.
11. △ DENOTES TWO EXTRA BARS ADDED FOR TESTING PURPOSES.
12. "E" IN PREFIX DENOTES EPOXY COATED REINFORCING STEEL.

ASTM STANDARD REINFORCING BARS

BAR SIZE DESIGNATION	WEIGHT POUNDS PER FOOT	NOMINAL DIMENSIONS ROUND SECTION		
		DIAMETER INCHES	CROSS SECTIONAL AREA SQ. INCHES	PERIMETER INCHES
#3	.376	.375	.11	1.178
#4	.668	.500	.20	1.571
#5	1.043	.625	.31	1.963
#6	1.502	.750	.44	2.356
#7	2.044	.875	.60	2.749
#8	2.670	1.000	.79	3.142
#9	3.400	1.128	1.00	3.544
#10	4.303	1.270	1.27	3.990
#11	5.313	1.410	1.56	4.430
#14	7.65	1.693	2.25	5.32
#18	13.60	2.257	4.00	7.09

STATE OF VERMONT
AGENCY OF TRANSPORTATION

Town Of SEARSBURG	Bridge No. 25B
Highway No. VT. RTE. 9	Log Sta. / Surv. Sta.
VT. RTE. 9 OVER DEERFIELD RIVER	
REINFORCING STEEL SCHEDULE 2 - BR 25B	
Designed By D. VIENI	Drawn by K. DETRICK
Checked By M. OLSTAD Date 12/2001	Bridge Design Supervisor M. OLSTAD Date 12/2001
PROJECT SEARSBURG - WILMINGTON	PROJECT NO. NHF 010-1(18)
I.G.C. Info.	
Bridge Sheet No. BR427	Sheet 233 OF 435

CHA CLOUGH, HARBOUR & ASSOCIATES LLP
ENGINEERS, SURVEYORS, PLANNERS & LANDSCAPE ARCHITECTS
11 WINNERS CIRCLE ALBANY, NEW YORK, 12205

FILE NAME =q:\1975\MSTN\15\BR0025B\25B_bar_list_PLT
DATE/TIME =12/18/01
USER =564

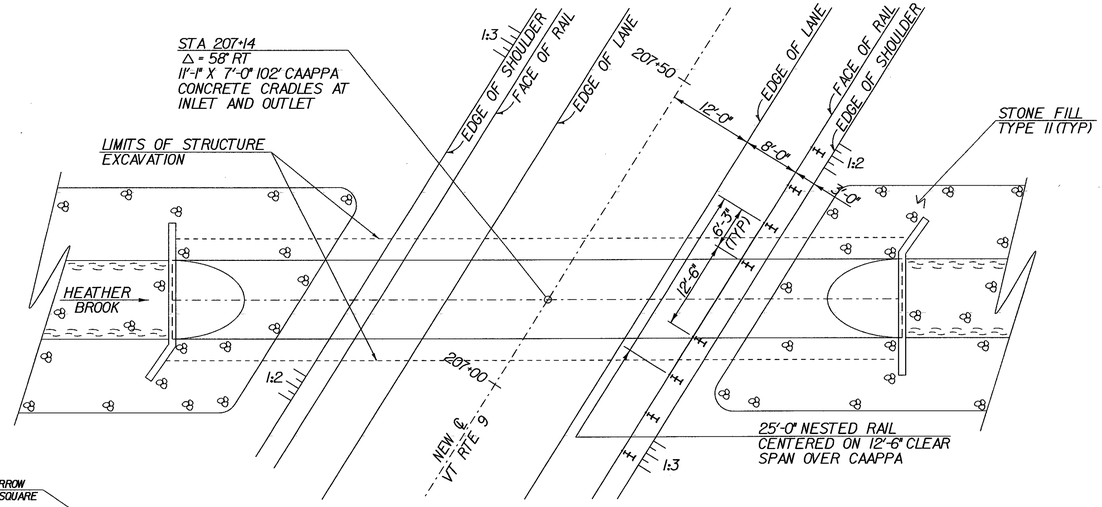

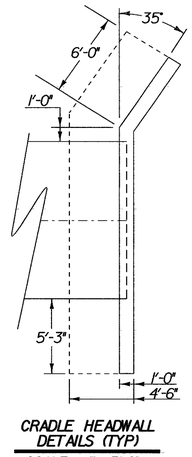

CRADLE HEADWALL DETAILS (TYP)
SCALE 1" = 5'-0"

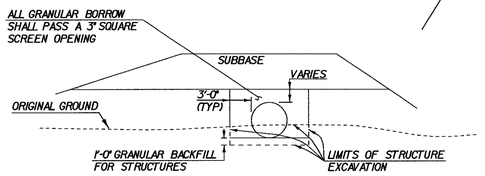

PLAN

SCALE 1" = 10'-0

10 0 10

EXCAVATION AND BACKFILL DETAILS

~ NOTES ~

1. ALL MATERIALS AND CONSTRUCTION SHALL CONFORM TO AGENCY OF TRANSPORTATION STANDARD SPECIFICATIONS FOR CONSTRUCTION DATED 1990, AND THE LATEST A.A.S.H.T.O. STANDARD SPECIFICATIONS FOR HIGWAY BRIDGES. DESIGN IS FOR HS-25 LIVE LOAD.
2. UNLESS OTHERWISE INDICATED, 5 1/3 BOLTS PER LINEAR FOOT FOR ALUMINUM PLATES ARE REQUIRED ALONG THE LONGITUDINAL SEAMS. ALL CONNECTIONS FOR STRUCTURAL PLATE SECTIONS SHALL BE MADE WITH BOLTS MEETING ASTM A-449 (GALVANIZED AFTER FABRICATION).
3. WHEN NORMAL CONSTRUCTION OR REGULAR TRAFFIC IS MAINTAINED OVER THE PIPE THE CONTRACTOR SHALL MAINTAIN A MINIMUM COVER OF THREE (3) FEET OF COMPACTED MATERIAL.
4. ALUMINUM PIPE WHICH IS TO BE IN CONTACT WITH CONCRETE SHALL HAVE CONTACT SURFACES THOROUGHLY COATED WITH BITUMINOUS OR ASPHALTIC PAINT.
5. PIPES SHALL BE FACTORY ELONGATED 5% (PIPE ARCHES SHALL NOT BE ELONGATED).
6. THE ENDS OF THE PIPE SHALL BE CUT SQUARE.
7. THE CONTRACTOR SHALL INCLUDE AT THE OUTLET END, A 10 FOOT PIECE OF 6" UNDERDRAIN EACH SIDE ON SAME GRADIENT AS CULVERT CONFORMING TO SUBSECTIONS 711.01. THE COST SHALL BE INCLUDED IN THE UNIT PRICE BID FOR THE CULVERT PIPE.

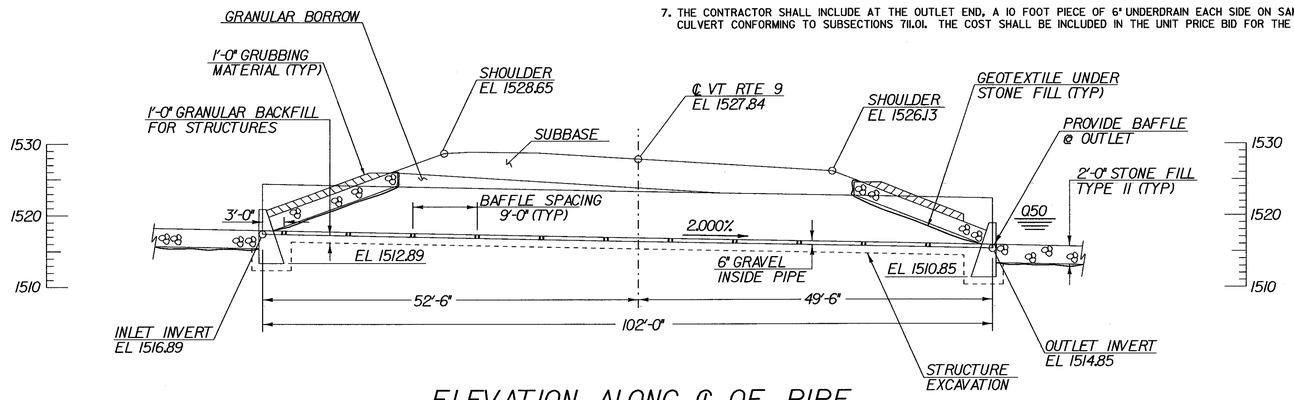

ELEVATION ALONG ℄ OF PIPE

SCALE 1" = 10'-0

10 0 10

~ HYDRAULIC DATA ~

DRAINAGE AREA 1.4 sq mi	DESIGN FLOW Q 50	DESIGN OUTLET VELOCITY 7.9 fps	
DESIGN TAILWATER DEPTH 3.6 ft	ELEVATION 1519.6		
ORDINARY HIGH WATER DEPTH 1.5 ft			
Q 10 FLOW 210 cfs	HEADWATER ELEVATION	1522.1	
Q 25 FLOW 270 cfs	HEADWATER ELEVATION	1522.9	
Q 50 FLOW 310 cfs	HEADWATER ELEVATION	1523.3	
Q 100 FLOW 380 cfs	HEADWATER ELEVATION	1524.1	
COMMENTS			

DETAILS OF STRUCTURAL PLATE PIPE CULVERTS

	STEEL	STEEL	ALUMINUM
CORRUGATIONS			9" X 2½"
SIZE OF PIPE OR PIPE ARCH		NO	11'-1" X 7'-0"
WATERWAY AREA		STEEL	61.4 sqft
PLATE THICKNESS (COATED)		OPTION	0.175 In
BOLT SIZE			¾" Ø
WEIGHT PER LINEAR FOOT			112 lb
TOTAL WEIGHT			11424 lb

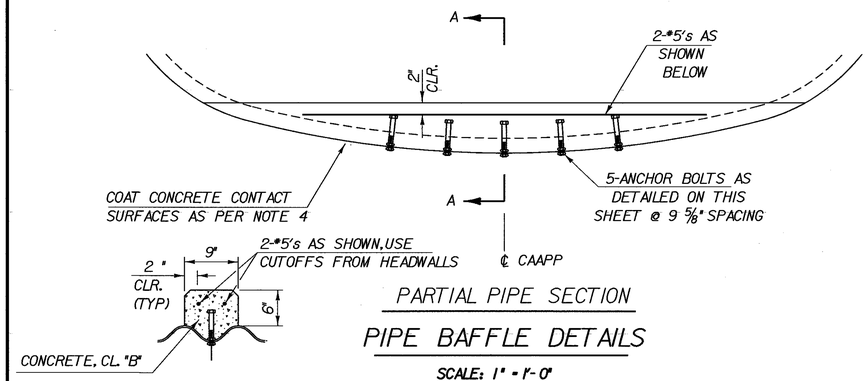

SECTION A - A

PARTIAL PIPE SECTION

PIPE BAFFLE DETAILS

SCALE: 1" = 1'-0"

THE BAFFLES LOCATED WITHIN THE PIPE SHALL NOT BE INSTALLED UNTIL THE FULL DEPTH OF THE GRANULAR BORROW BACKFILL HAS BEEN PLACED.

ALL COSTS OF PLACING THE PIPE BAFFLES SHALL BE INCLUDED IN THE PRICE BID FOR THE CAAPP.

SEE ELEVATION FOR BAFFLE LOCATIONS. THE SPACING WILL BE ADJUSTED TO BE CENTERED ON THE NEAREST CORRUGATION VALLEY.

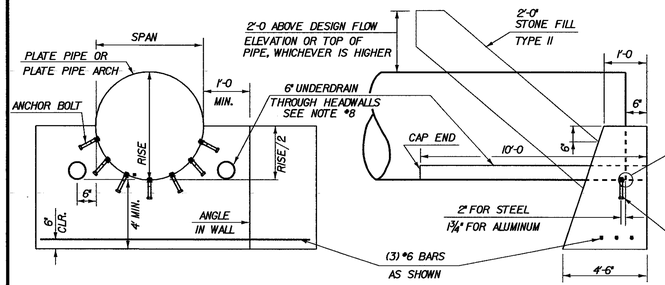

CRADLE HEADWALL DETAILS

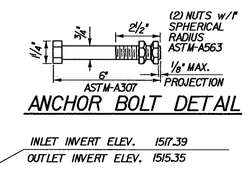

ANCHOR BOLT DETAIL

INLET INVERT ELEV. 1517.39
OUTLET INVERT ELEV. 1515.35

(1) ROW GALVANIZED ANCHOR BOLTS SPACED IN ALTERNATE CIRCUMFERENTIAL SEAM HOLES (19.2" C-C) TO BE FURNISHED WITH AND INCLUDED IN COST OF PIPE.

REINFORCING STEEL SCHEDULE

NO. PCS.	SIZE	LENGTH	MARK	TYPE	A	B
6	6	23'-9"	1H601	8	17'-0"	5'-9"

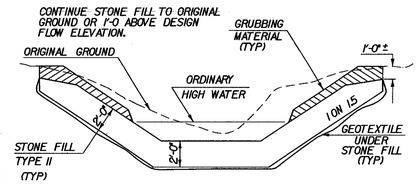

TYPICAL CHANNEL SECTION

ESTIMATED QUANTITIES

NO.	ITEM	UNIT	TOTAL	FINAL
203.27	Unclassified Channel Excavation	cy	120	
203.32	Granular Borrow	cy	230	
204.25	Structure Excavation	cy	315	
204.30	Granular Backfill for Structures	cy	95	
501.25	Concrete, Class B	cy	32	
507.15	Reinforcing Steel	lb	215	
511.30	CAAPPA – Sta 207+14	ea	1	
529.20	Partial Removal of Structure	ea	1	
613.11	Stone Fill, Type II	cy	180	
649.31	Geotextile Under Stone Fill	sy	270	
651.40	Grubbing Material	sy	140	

STATE OF VERMONT
AGENCY OF TRANSPORTATION

Town Of WILMINGTON	Bridge No. 26
Highway No. VT RTE 9	Log Sta. / Surv. Sta.
CORR. ALUM. ALLOY PLATE PIPE ARCH	
HEATHER BROOK – STA 207+14	
Designed By C WOODS	Drawn By C WOODS
Checked By T SCHMELZENBACH Date 1/94	Bridge Design Supervisor J WEAVER Date 1/94
PROJECT SEARSBURG	PROJECT NO. F010-1(18)
LG.C. Info. N:\78d096\Structures\sd096ly.dgn	sd096c07.1
Bridge Sheet No.	Sheet 237 of 435

PLOTTED 05-FEB-2002

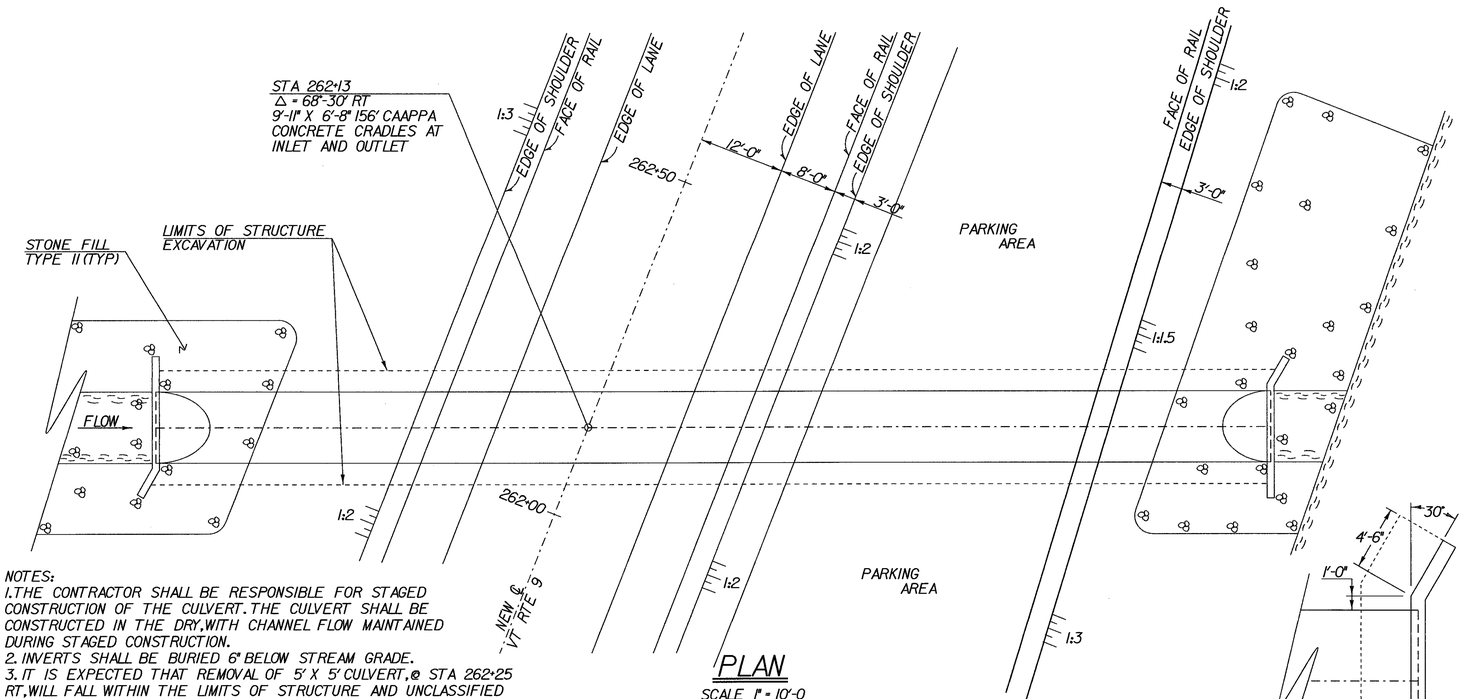

PLAN

SCALE 1" = 10'-0

10 0 10

NOTES:
1. THE CONTRACTOR SHALL BE RESPONSIBLE FOR STAGED CONSTRUCTION OF THE CULVERT. THE CULVERT SHALL BE CONSTRUCTED IN THE DRY, WITH CHANNEL FLOW MAINTAINED DURING STAGED CONSTRUCTION.
2. INVERTS SHALL BE BURIED 6" BELOW STREAM GRADE.
3. IT IS EXPECTED THAT REMOVAL OF 5' X 5' CULVERT, @ STA 262+25 RT, WILL FALL WITHIN THE LIMITS OF STRUCTURE AND UNCLASSIFIED CHANNEL EXCAVATIONS. THUS REMOVAL OF SAID CULVERT WILL BE IN ACCORDANCE WITH ITEM 529.15, REMOVAL OF STRUCTURE, BUT SHALL BE PAID ENTIRELY UNDER ITEMS 204.25 AND 203.27, STRUCTURE AND UNCLASSIFIED CHANNEL EXCAVATIONS.

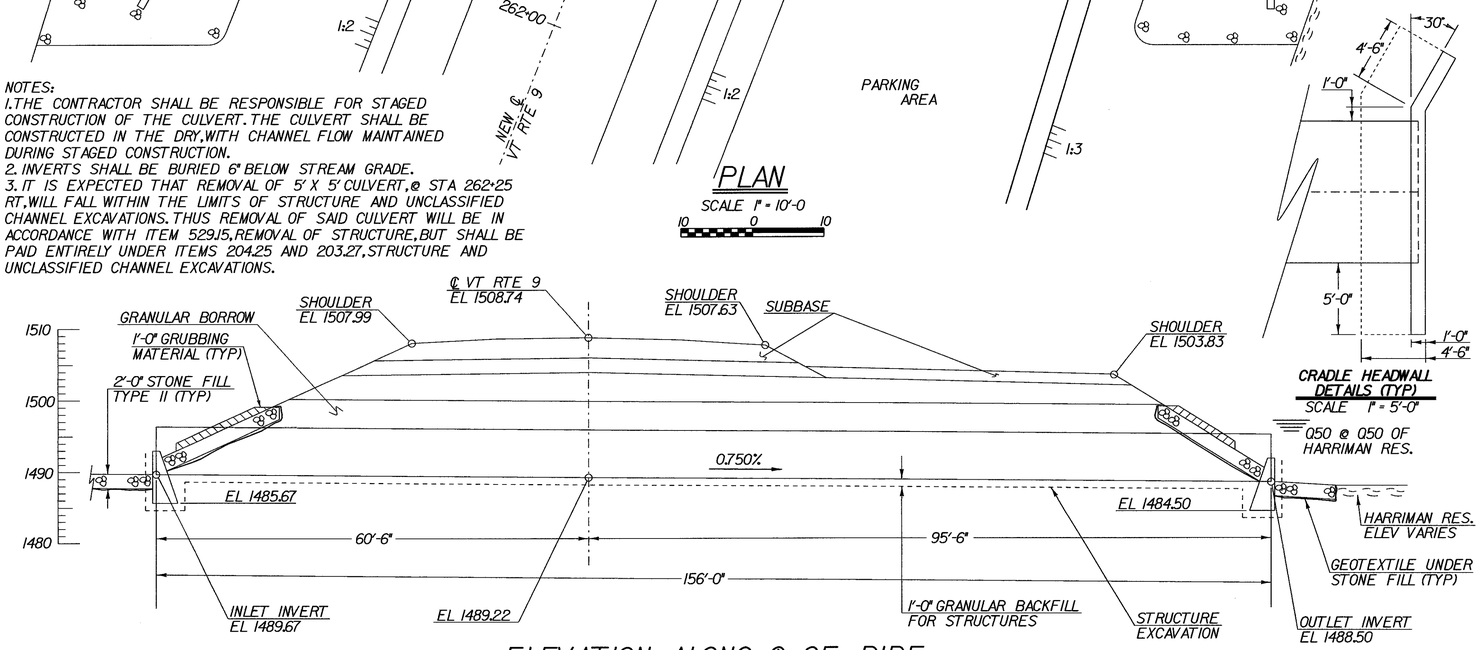

ELEVATION ALONG ℄ OF PIPE

SCALE 1" = 10'-0

10 0 10

CRADLE HEADWALL DETAILS (TYP)

SCALE 1" = 5'-0"

Q50 @ Q50 OF HARRIMAN RES.

~ NOTES ~

1. ALL MATERIALS AND CONSTRUCTION SHALL CONFORM TO AGENCY OF TRANSPORTATION STANDARD SPECIFICATIONS FOR CONSTRUCTION DATED 1990, AND THE LATEST A.A.S.H.T.O. STANDARD SPECIFICATIONS FOR HIGWAY BRIDGES. DESIGN IS FOR HS-25 LIVE LOAD.
2. UNLESS OTHERWISE INDICATED, 5 1/3 BOLTS PER LINEAR FOOT FOR ALUMINUM PLATES ARE REQUIRED ALONG THE LONGITUDINAL SEAMS. ALL CONNECTIONS FOR STRUCTURAL PLATE SECTIONS SHALL BE MADE WITH BOLTS MEETING ASTM A-449 (GALVANIZED AFTER FABRICATION).
3. WHEN NORMAL CONSTRUCTION OR REGULAR TRAFFIC IS MAINTAINED OVER THE PIPE THE CONTRACTOR SHALL MAINTAIN A MINIMUM COVER OF THREE (3) FEET OF COMPACTED MATERIAL.
4. ALUMINUM PIPE WHICH IS TO BE IN CONTACT WITH CONCRETE SHALL HAVE CONTACT SURFACES THOROUGHLY COATED WITH BITUMINOUS OR ASPHALTIC PAINT.
5. PIPES SHALL BE FACTORY ELONGATED 5% (PIPE ARCHES SHALL NOT BE ELONGATED).
6. THE ENDS OF THE PIPE SHALL BE CUT SQUARE.
7. THE CONTRACTOR SHALL INCLUDE AT THE OUTLET END, A 10 FOOT PIECE OF 6" UNDERDRAIN EACH SIDE ON SAME GRADIENT AS CULVERT CONFORMING TO SUBSECTIONS 711.01. THE COST SHALL BE INCLUDED IN THE UNIT PRICE BID FOR THE CULVERT PIPE.

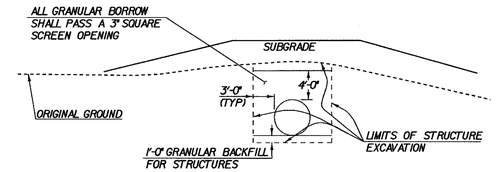

EXCAVATION AND BACKFILL DETAILS

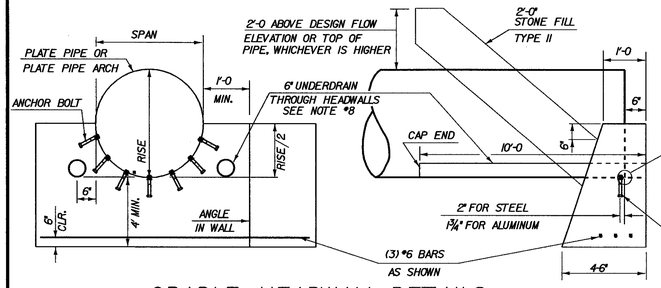

CRADLE HEADWALL DETAILS

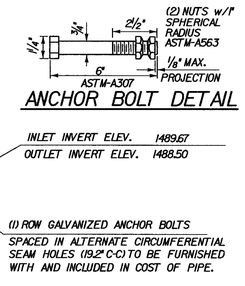

ANCHOR BOLT DETAIL

REINFORCING STEEL SCHEDULE

NO. PCS.	SIZE	LENGTH	MARK	TYPE	A	B
6	6	20'-0"	2H601	8	15'-9"	4'-3"

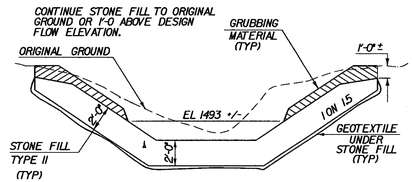

TYPICAL CHANNEL SECTION

ESTIMATED QUANTITIES

NO.	ITEM	UNIT	TOTAL	FINAL
203.27	Unclassified Channel Excavation	cy	390	
203.32	Granular Borrow	cy	560	
204.25	Structure Excavation	cy	925	
204.30	Granular Backfill for Structures	cy	118	
501.25	Concrete, Class B	cy	30	
507.15	Reinforcing Steel	lb	180	
511.30	CAAPPA – Sta 262+13	ea	1	
613.11	Stone Fill, Type II	cy	305	
649.31	Geotextile Under Stone Fill	sy	455	
651.40	Grubbing Material	sy	170	

~ HYDRAULIC DATA ~

DRAINAGE AREA 0.67 sq mi DESIGN FLOW Q 50 DESIGN OUTLET VELOCITY 8.7 fps (max.)

DESIGN TAILWATER DEPTH varies ELEVATION see comment below * HARRIMAN RESERVOIR FLOW

ORDINARY HIGH WATER DEPTH varies		OLW*	Q2.33*	Q10*	Q25*	Q50*	Q100*
Q 10 FLOW 140 cfs	HEADWATER ELEVATION	1493.6	1494.2	1495.0	1495.6	1496.6	1497.6
Q 25 FLOW 180 cfs	HEADWATER ELEVATION	1494.2	1494.6	1495.3	1495.9	1496.9	1497.9
Q 50 FLOW 210 cfs	HEADWATER ELEVATION	1494.6	1494.9	1495.5	1496.1	1497.1	1498.1
Q 100 FLOW 250 cfs	HEADWATER ELEVATION	1495.2	1495.4	1495.9	1496.5	1497.5	1498.5
	DESIGN TAILWATER ELEVATION	1492.0	1493.5	1494.5	1495.3	1496.2	1497.2

COMMENTS: WATER SURFACE ELEVATIONS ARE CONTROLLED BY HARRIMAN RESERVOIR

DETAILS OF STRUCTURAL PLATE PIPE CULVERTS

	STEEL	STEEL	ALUMINUM
CORRUGATIONS			9" X 2 1/2"
SIZE OF PIPE OR PIPE ARCH	NO		9'-11" X 6'-8"
WATERWAY AREA	STEEL		52.7 sqft
PLATE THICKNESS (COATED)	OPTION		0.125"
BOLT SIZE			3/4" Ø
WEIGHT PER LINEAR FOOT			76.6 lb
TOTAL WEIGHT			11950 lb

STATE OF VERMONT
AGENCY OF TRANSPORTATION

Town Of WILMINGTON	Bridge No. 27
Highway No. VT RTE 9	Log Sta. / Surv. Sta.
CORR. ALUM. ALLOY PLATE PIPE ARCH	
UNNAMED BROOK – STA 262+13	
Designed By C WOODS	Drawn By C WOODS
Checked By T SCHMELZENBACH Date 1/94	Bridge Design Supervisor J WEAVER Date 1/94
PROJECT SEARSBURG	PROJECT NO. F010-1(18)
L.G.C. Info. N:\78d096\Structures\sd096ly.dgn	sd096c621
Bridge Sheet No.	Sheet 238 of 435

PLOTTED 27-FEB-2002

STATE OF VERMONT
AGENCY OF TRANSPORTATION

QUANTITY SHEET

SUMMARY OF ESTIMATED QUANTITIES	TOTALS			DESCRIPTIONS				DETAILED SUMMARY OF QUANTITIES		
WALL QUANTITY	ROUND	GRAND TOTAL	FINAL	UNIT	ITEMS	ITEM NUMBER		QUANTITIES	UNIT	ITEMS
1080				CY	STRUCTURE EXCAVATION	204.25				
1010				CY	GRANULAR BACKFILL FOR STRUCTURES	204.30				
553				CY	CONCRETE, CLASS B (HPC-B) (MOD.)	501.25				
75200				LB	REINFORCING STEEL	507.15				
416				SY	STONE MASONRY FACING (MOD.)	602.25				
2				EA	GUARD RAIL APPROACH SECTION, NETC 2 RAIL (MOD.)	621.72	®			
					® DENOTES ROADWAY QUANTITY					

PROJECT NAME: **SEARSBURG-WILMINGTON**
PROJECT NUMBER: **NH F010-1(18)**

FILE NAME: **sd096wal1qty.xls**
PROJECT LEADER: **R. R. WHITCOMB**
DESIGNED BY: **J. LACROIX**
CATAMOUNT TRAIL QUANTITY SHEET BR500

PLOT DATE: **2/26/02**
DRAWN BY: **G. ROY**
CHECKED BY: **G. ROY**
SHEET 239 OF 435

NOTES

1. THRIE BEAM RAIL, TRANSITION SECTION, WOOD POSTS AND OFFSET BLOCKS SHALL CONFORM TO SECTION 728 - GUARD RAIL, GUIDE POSTS AND BARRIERS OF THE STANDARD SPECIFICATIONS FOR CONSTRUCTION.
2. TERMINAL CONNECTOR AND CONNECTOR PLATE SHALL BE ASTM A709/A709M, GRADE 36.
3. BOLTS SHALL BE ROUND HEAD, AASHTO M164, TYPE 1. NUTS SHALL COMPLY WITH AASHTO M291. WASHERS SHALL COMPLY WITH AASHTO M293 (ASTM A563).
4. ALL PARTS SHALL BE GALVANIZED AFTER FABRICATION IN ACCORDANCE WITH AASHTO M111, EXCEPT THAT HARDWARE SHALL MEET THE REQUIREMENTS OF AASHTO M232.
5. ALL APPROACH RAIL SPLICES SHALL BE LAPPED IN THE DIRECTION OF TRAFFIC FLOW.
6. ALL MATERIALS AND INSTALLATION COSTS FOR THE GUARD RAIL APPROACH SECTION, INCLUDING CONNECTOR PLATE, TERMINAL CONNECTOR, RAIL, POSTS, OFFSET BLOCKS, AND ATTACHMENT HARDWARE SHALL BE PAID FOR UNDER ITEM 621.72 "GUARD RAIL APPROACH SECTION, NETC 2 RAIL (MOD.)".

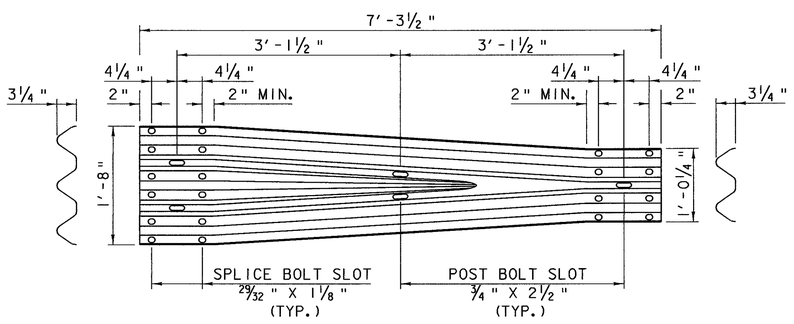

THRIE-BEAM TO W-BEAM TRANSITION SECTION

SCALE: 1" = 1'-0"

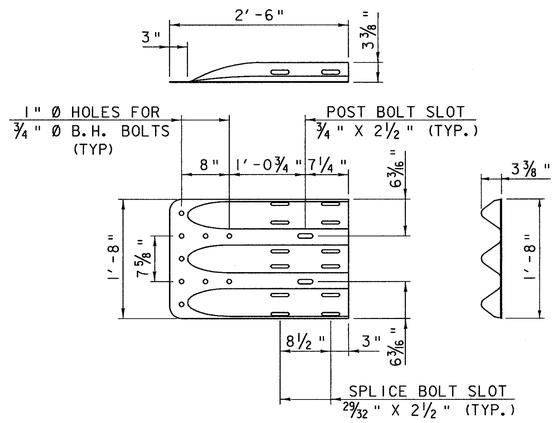

THRIE-BEAM TERMINAL CONNECTOR

SCALE: 1" = 1'-0"

(ARTBA HM-TF-13 / RE-67)

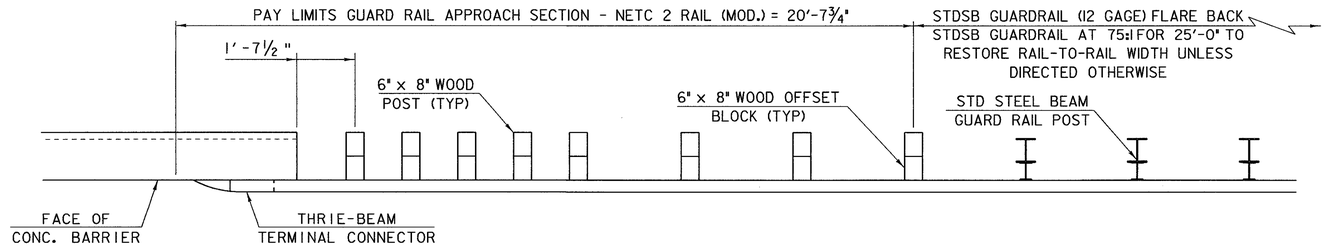

RAILING TRANSITION PLAN

NOT TO SCALE

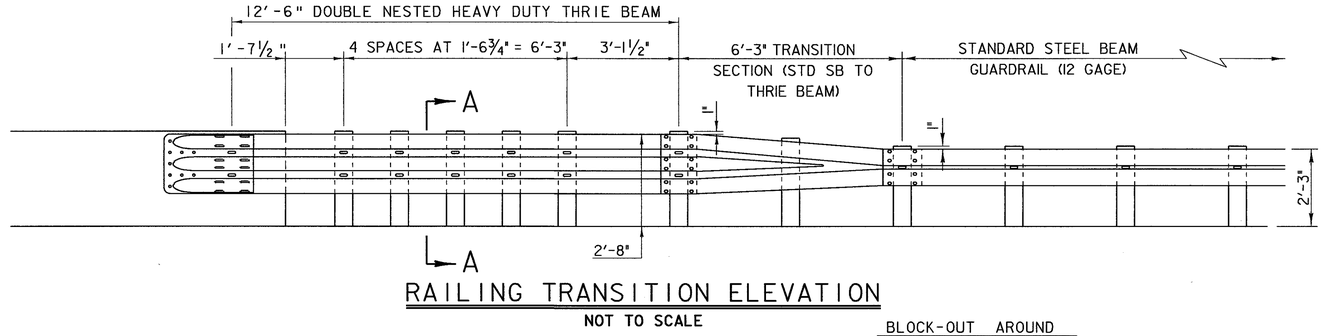

RAILING TRANSITION ELEVATION

NOT TO SCALE

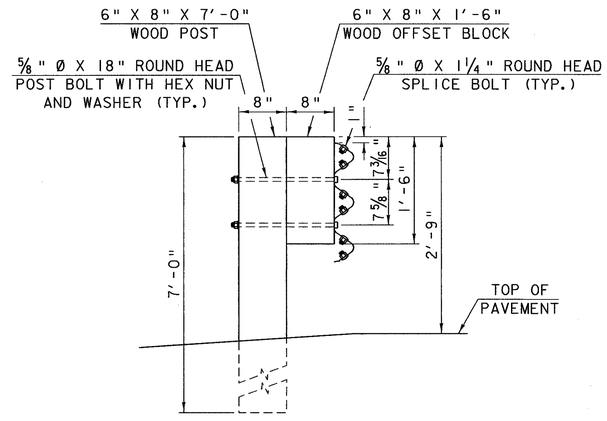

SECTION A-A

SCALE: 1" = 1'-0"

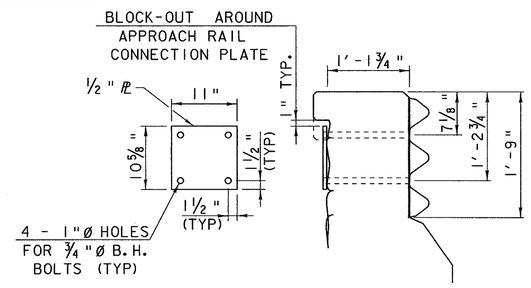

CONNECTION DETAIL

SCALE: 1" = 1'-0"

STATE OF VERMONT
AGENCY OF TRANSPORTATION

Town Of SEARSBURG-WILMINGTON	Bridge No.
Highway No. VT 9	Log Sta. / Surv. Sta.
CATAMOUNT TRAIL WALL	
APPROACH RAIL DETAILS	
Designed By R. WHITCOMB	Drawn By J. LACROIX
Checked By G. ROY Date 2/02	Project Manager R.R. WHITCOMB Date 2/02
PROJECT SEARSBURG-WILMINGTON	PROJECT NO. NHF 010-1(18)
I.G.C. Info. 78d096\Structures\sd096typ.dgn	sd096rai.i
Bridge Sheet No. BR501	Sheet 240 of 435

PLOTTED 26-FEB-2002

GENERAL NOTES

1. STONE PATTERN TO EXTEND 6" TO 12" BELOW GROUNDLINE
2. STONE PATTERN FORM LINER TO BE USED ON EXPOSED FACE ONLY
3. WATER REPELLENT SHALL BE APPLIED TO ALL EXPOSED CONCRETE SURFACES
4. ALL CONCRETE SHALL BE CONCRETE, CLASS B (HPC-B) (MOD.)
5. ALL EXPOSED EDGES OF NEW CONCRETE SHALL BE CHAMFERED 1" X 1". JOINTS AND SCORE MARKS IN CONCRETE SHALL BE CONSTRUCTED AS SHOWN IN THE PLANS OR AS DIRECTED BY THE RESIDENT ENGINEER.
6. THE KEY IN CONCRETE CONSTRUCTION JOINTS SHALL BE MONOLITHIC AND CONTINUOUS FOR THE FULL LENGTH OF THE JOINT. ANY UPWARD KEY SHALL BE PLACED INTEGRALLY WITH THE CONCRETE BELOW THE JOINT.
7. FORM LINER PATTERN SHALL BE CUSTOM-ROCK INTERNATIONAL PATTERN NUMBER 1103 (RUSTIC ASHLAR) OR EQUIVALENT.

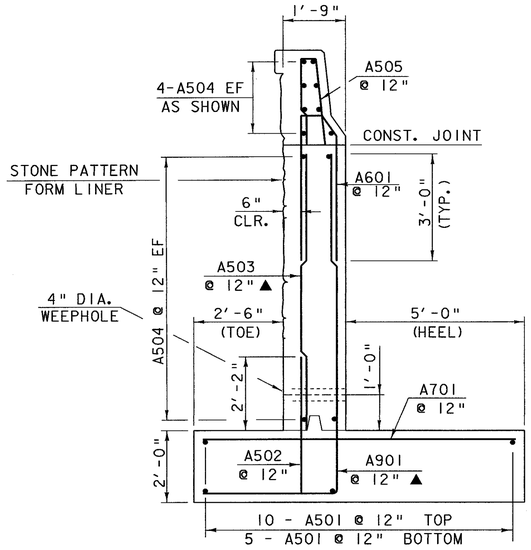

CATAMOUNT TRAIL WALL TYPICAL A

SECTION 5
SCALE: ½" = 1'-0"
10' DESIGN HT.

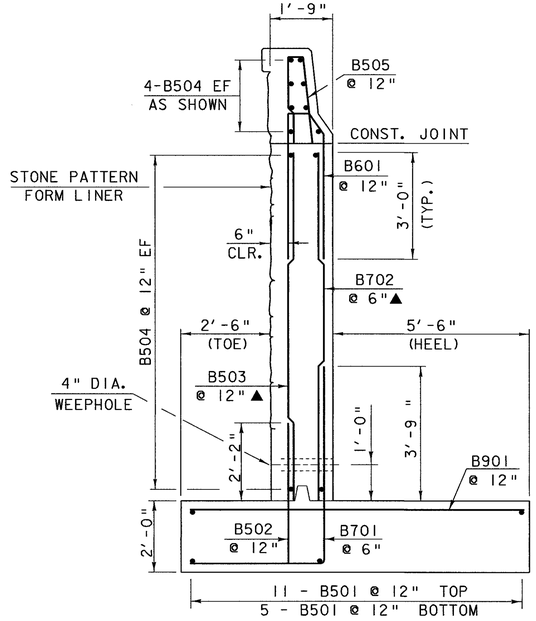

CATAMOUNT TRAIL WALL TYPICAL B

SECTIONS: 3 & 4
SCALE: ½" = 1'-0"
12' DESIGN HT.

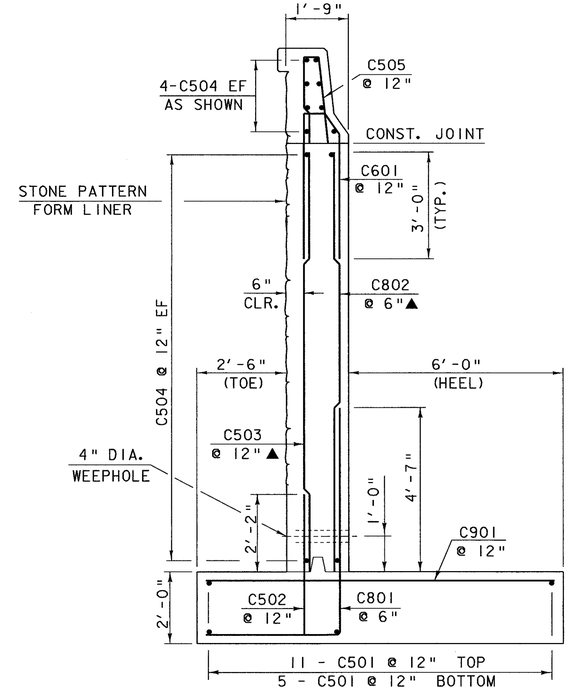

CATAMOUNT TRAIL WALL TYPICAL C

SECTIONS: 1 & 2
SCALE: ½" = 1'-0"
14' DESIGN HT.

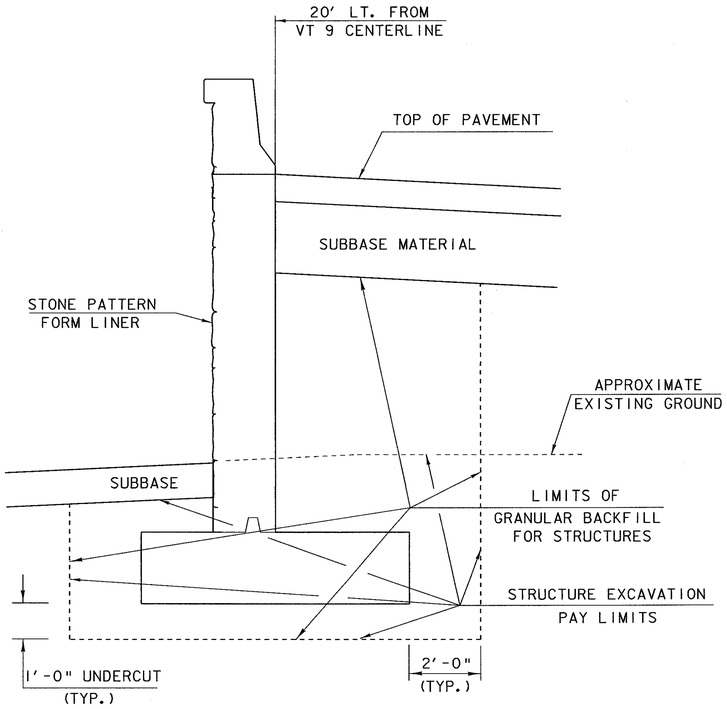

CATAMOUNT TRAIL WALL EARTHWORK TYPICAL

(NOT TO SCALE)

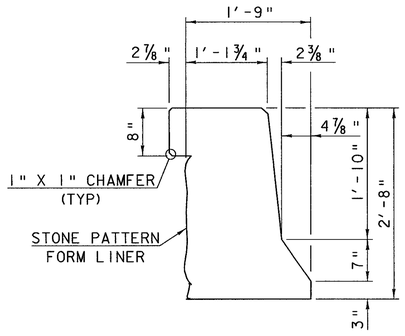

BARRIER DIMENSIONS

SCALE: 1" = 1'-0"

NOTE:

NF = NEAR FACE
FF = FAR FACE
EF = EACH FACE
▲ = CUT TO FIT IN FIELD
3" CLR. UNLESS OTHERWISE NOTED
2'-2" BAR LAP UNLESS OTHERWISE NOTED

STATE OF VERMONT
AGENCY OF TRANSPORTATION

Town Of SEARSBURG-WILMINGTON	Bridge No.
Highway No. VT 9	Log Sta.
	Surv. Sta.
CATAMOUNT TRAIL WALL	
WALL TYPICAL SECTIONS	
Designed By J. LACROIX	Drawn By J. LACROIX
Checked By G. ROY Date 2/02	Project Manager R.R. WHITCOMB Date 2/02
PROJECT SEARSBURG-WILMINGTON	PROJECT NO. NHF 010-1(18)
I.G.C. Info. 78d096\Structures\sd096typ.dgn	sd096typ.i
Bridge Sheet No. BR502	Sheet 241 of 435

PLOTTED 22-FEB-2002

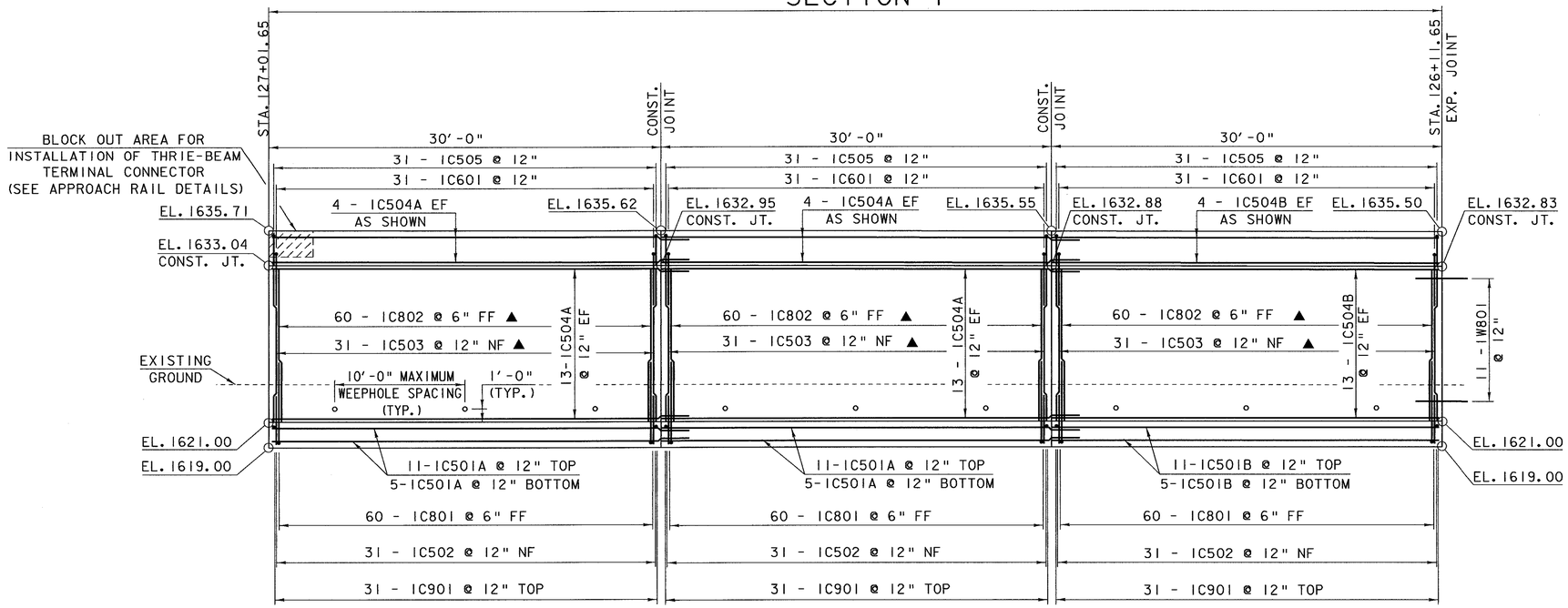

ELEVATION

SCALE: 1" = 5'-0"

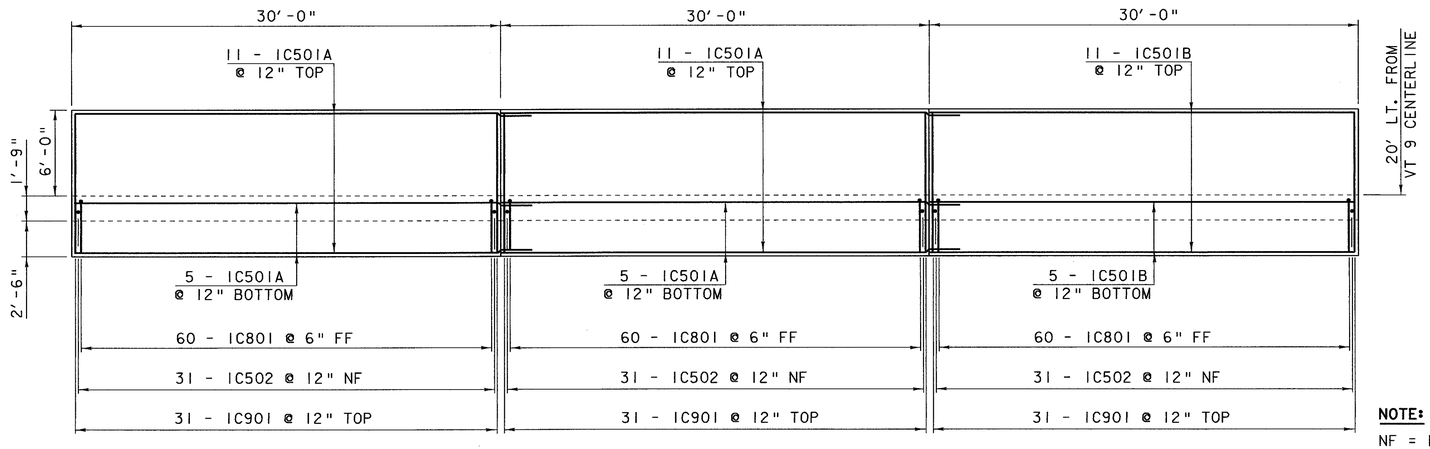

FOOTING PLAN

SCALE: 1" = 5'-0"

SECTION	DESIGN
I	C

NOTE:

NF = NEAR FACE
FF = FAR FACE
EF = EACH FACE
▲ = CUT TO FIT IN FIELD
3" CLR. UNLESS OTHERWISE NOTED
2'-2" BAR LAP UNLESS OTHERWISE NOTED

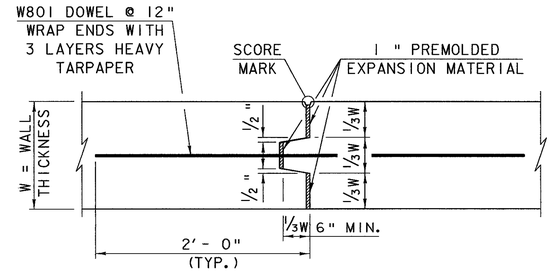

TYPICAL CONCRETE EXPANSION JOINT

(IN WALL ONLY. PAINT SIDE OF KEY WITH BITUMEN TO PREVENT BONDING.)

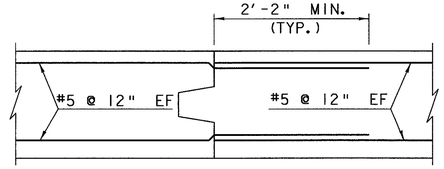

TYPICAL CONCRETE CONSTRUCTION JOINT

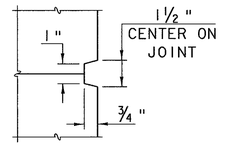

SCORE MARK DETAIL

NOT TO SCALE

STATE OF VERMONT
AGENCY OF TRANSPORTATION

Town Of SEARSBURG-WILMINGTON	Bridge No.
Highway No. VT 9	Log Sta.
	Surv. Sta.

CATAMOUNT TRAIL WALL

PLAN AND ELEVATION SECTION I

Designed By J. LACROIX	Drawn By J. LACROIX
Checked By G. ROY Date 2/02	Bridge Design Supervisor R.R. WHITCOMB Date 2/02
PROJECT SEARSBURG-WILMINGTON	PROJECT NO. NHF 010-1(18)
I.G.C. Info. 78d096\Structures\sd096wal.dgn	sd096wal.i
Bridge Sheet No. BR503	Sheet 242 of 435

PLOTTED 22-FEB-2002

SECTION 2

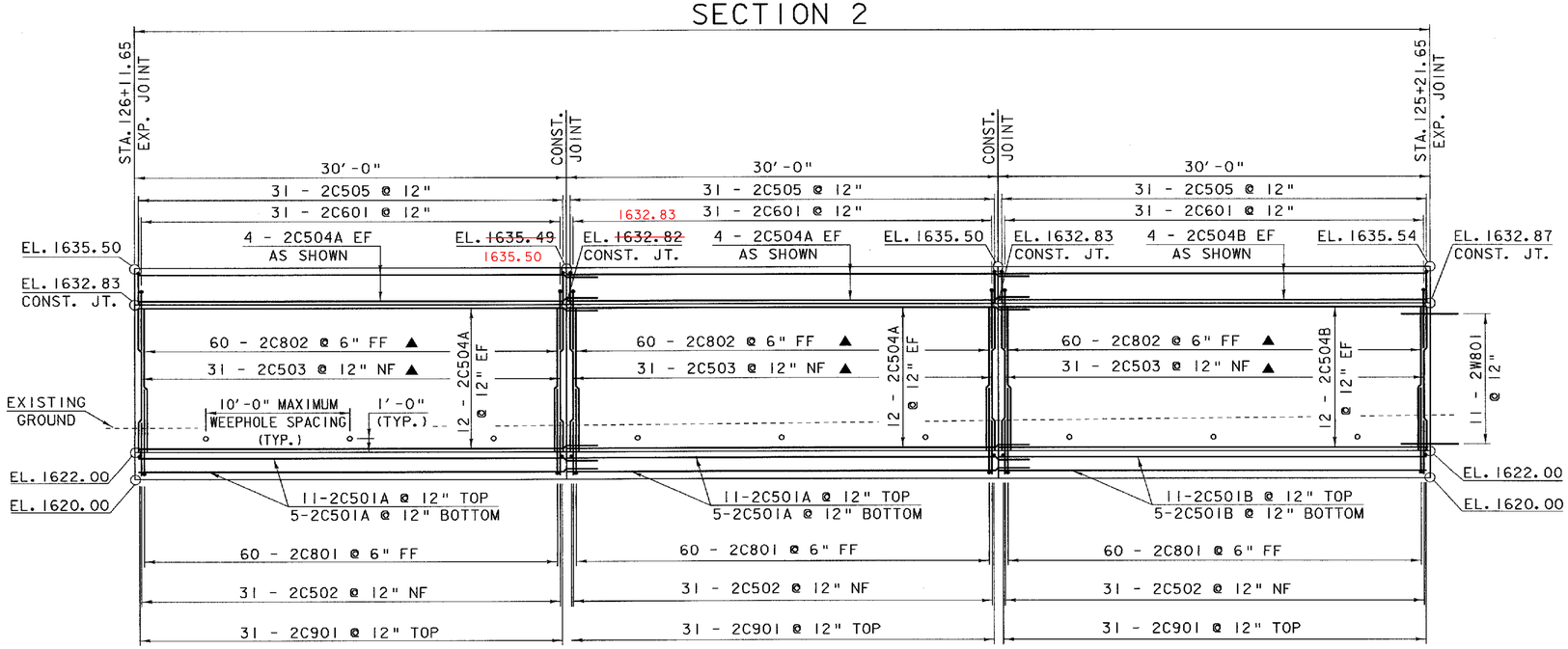

ELEVATION

SCALE: 1" = 5'

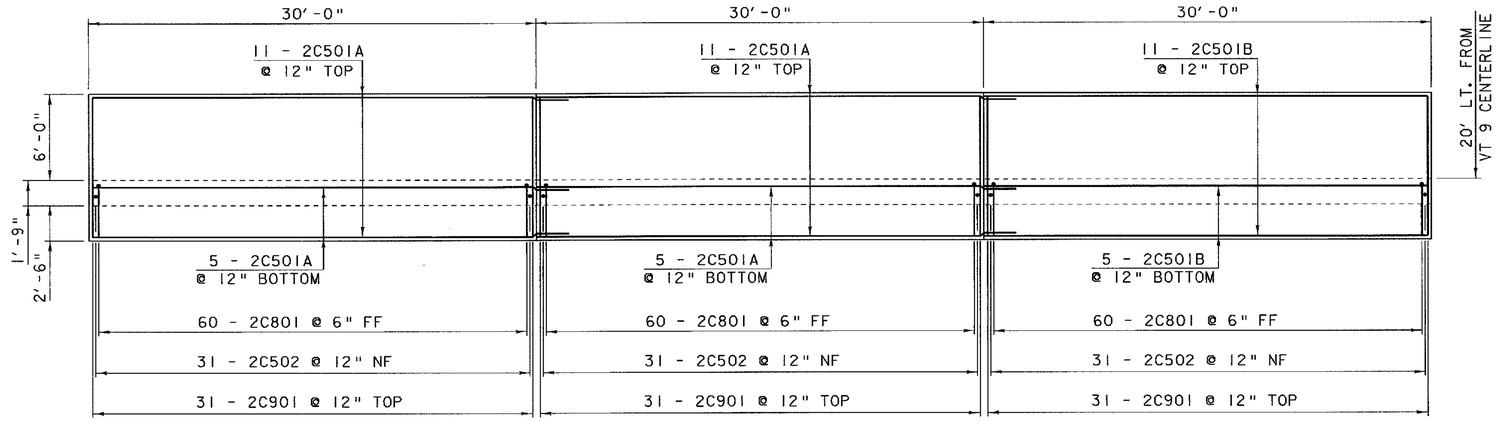

FOOTING PLAN

SCALE: 1" = 5'

SECTION	DESIGN
2	C

NOTE:

NF = NEAR FACE
FF = FAR FACE
EF = EACH FACE
▲ = CUT TO FIT IN FIELD
3" CLR. UNLESS OTHERWISE NOTED
2'-2" BAR LAP UNLESS OTHERWISE NOTED

STATE OF VERMONT
AGENCY OF TRANSPORTATION

Town Of SEARSBURG-WILMINGTON	Bridge No.
Highway No. VT 9	Log Sta. / Surv. Sta.
CATAMOUNT TRAIL WALL	
PLAN AND ELEVATION SECTION 2	
Designed By J. LACROIX	Drawn By J. LACROIX
Checked By G. ROY Date 2/02	Bridge Design Supervisor R.R. WHITCOMB Date 2/02
PROJECT SEARSBURG-WILMINGTON	PROJECT NO. NHF 010-1(18)
I.G.C. Info. 78d096\Structures\sd096wal.dgn	sd096wa2.i
Bridge Sheet No. BR504	Sheet 243 of 435

PLOTTED 22-FEB-2002

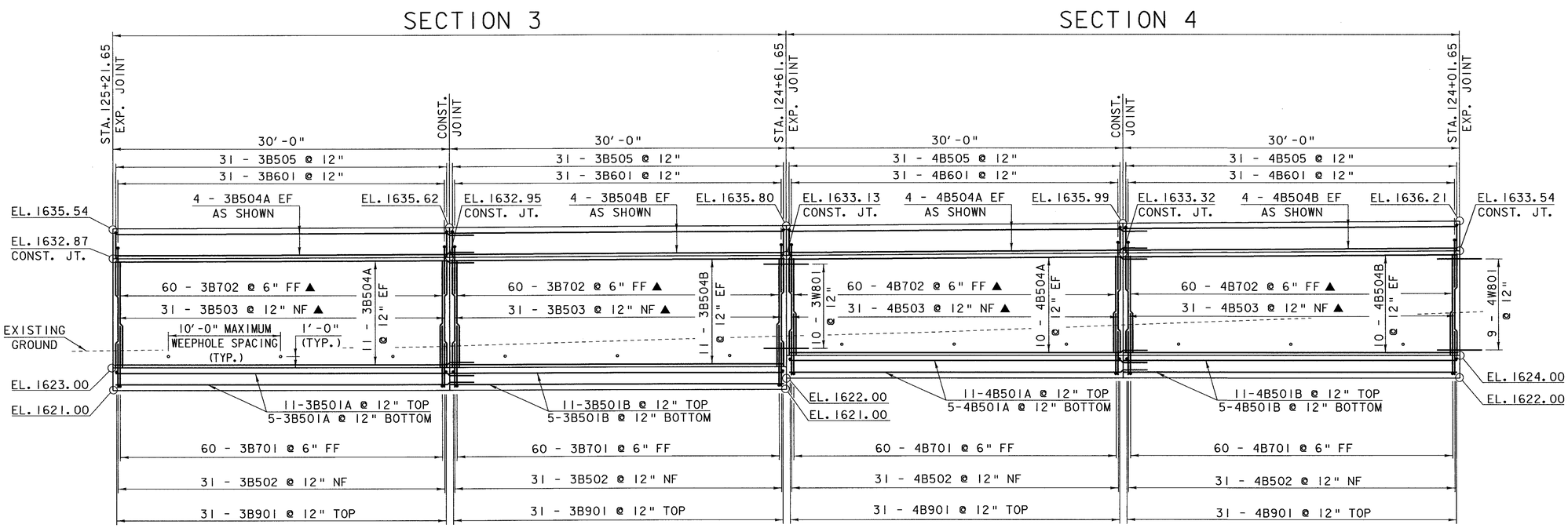

ELEVATION

SCALE: 1" = 5'-0"

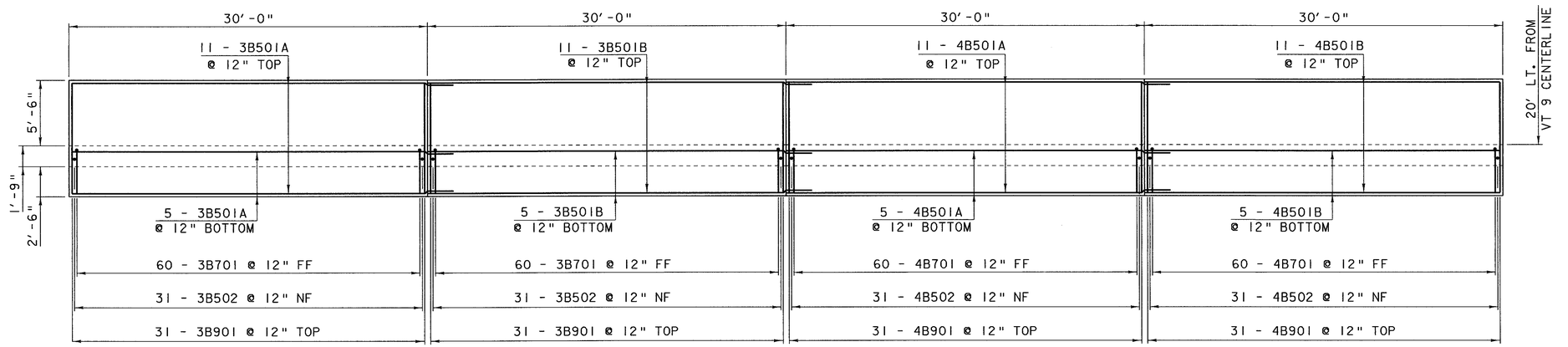

FOOTING PLAN

SCALE: 1" = 5'-0"

SECTION	DESIGN
3	B
4	B

NOTE:

NF = NEAR FACE
FF = FAR FACE
EF = EACH FACE
▲ = CUT TO FIT IN FIELD
3" CLR. UNLESS OTHERWISE NOTED
2'-2" BAR LAP UNLESS OTHERWISE NOTED

STATE OF VERMONT
AGENCY OF TRANSPORTATION

Town Of SEARSBURG-WILMINGTON	Bridge No.
Highway No. VT 9	Log Sta. / Surv. Sta.
CATAMOUNT TRAIL WALL	
PLAN AND ELEVATION SECTIONS 3 & 4	
Designed By J. LACROIX	Drawn By J. LACROIX
Checked By G. ROY Date 2/02	Bridge Design Supervisor R.R. WHITCOMB Date 2/02
PROJECT SEARSBURG-WILMINGTON	PROJECT NO. NHF 010-1(18)
L.G.C. Info. 78d096\Structures\sd096wa1.dgn	sd096wa3.i
Bridge Sheet No. BR505	Sheet 244 of 435

PLOTTED 22-FEB-2002

SECTION 5

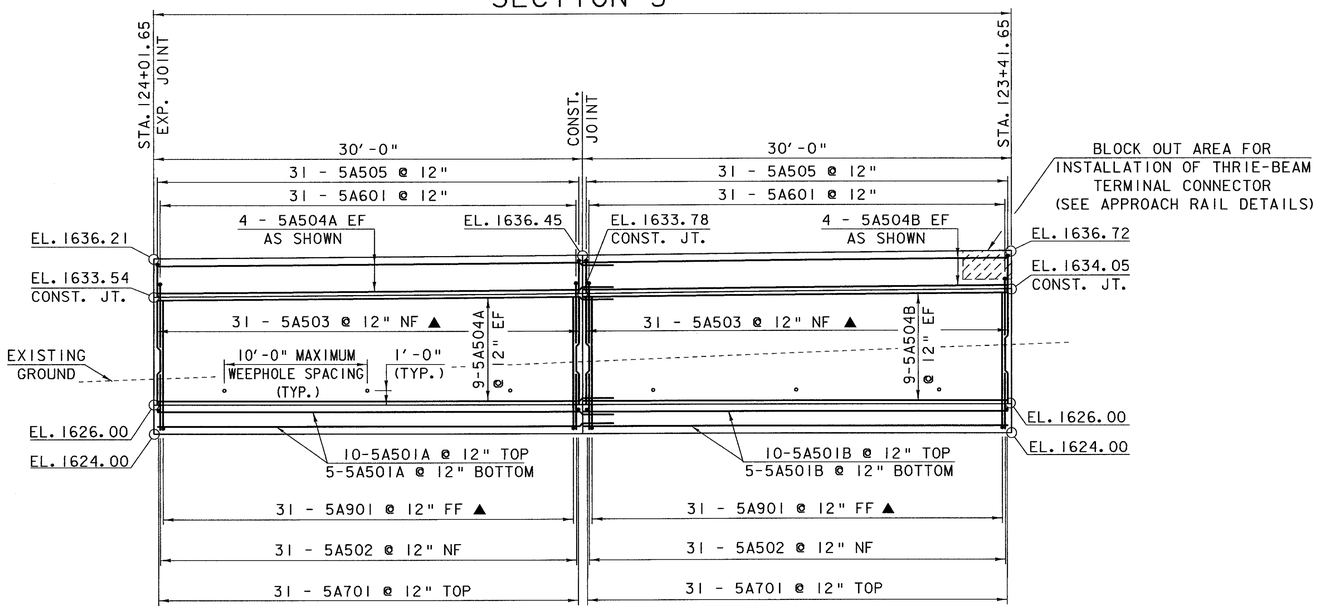

ELEVATION

SCALE: 1" = 5'-0"

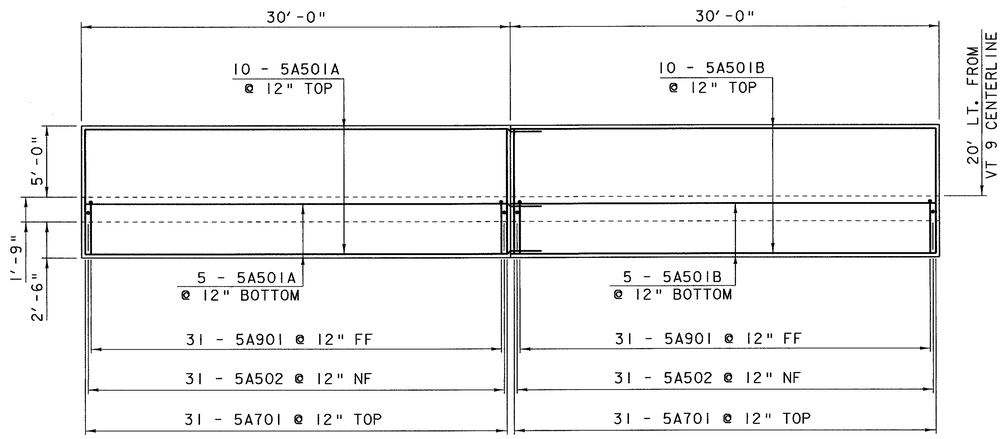

FOOTING PLAN

SCALE: 1" = 5'-0"

SECTION	DESIGN
5	A

NOTE:

NF = NEAR FACE
FF = FAR FACE
EF = EACH FACE
▲ = CUT TO FIT IN FIELD
3" CLR. UNLESS OTHERWISE NOTED
2'-2" BAR LAP UNLESS OTHERWISE NOTED

STATE OF VERMONT
AGENCY OF TRANSPORTATION

Town Of SEARSBURG-WILMINGTON	Bridge No.
Highway No. VT 9	Log Sta. / Surv. Sta.
CATAMOUNT TRAIL WALL	
PLAN AND ELEVATION SECTION 5	
Designed By J. LACROIX	Drawn By J. LACROIX
Checked By G. ROY Date 2/02	Bridge Design Supervisor R.R. WHITCOMB Date 2/02
PROJECT SEARSBURG-WILMINGTON	PROJECT NO. NHF 010-1(18)
I.G.C. Info. 78d096\Structures\sd096wa1.dgn	sd096wa4.i
Bridge Sheet No. BR506	Sheet 245 of 435

PLOTTED 22-FEB-2002

STATE OF VERMONT
AGENCY OF TRANSPORTATION

REINFORCING STEEL SCHEDULE

ITEM	EACH	SIZE	LENGTH	MARK	TYPE	A	B	C	D	E	F	G	H	J	K	R	O
SECTION 1																	
	32	5	31'- 11"	1C501A	STR												
	16	5	29'- 9"	1C501B	STR												
	93	5	3'- 11"	1C502	STR												
✳ ▲	94	5	11'- 9"	1C503	STR												
	68	5	31'- 11"	1C504A	STR												
	34	5	29'- 9"	1C504B	STR												
	93	5	5'- 3"	1C505	29		2'- 5"	0'- 5"	2'- 5"				2'- 5"		0'- 3"		
△	95	6	8'- 10"	1C601	28		4'- 1"	0'- 7"	0'- 8"	3'- 6"			0'- 7"		0'- 5"		
✳	181	8	10'- 1"	1C801	17		6'- 4"	3'- 9"	---								
✳ ▲	181	8	11'- 9"	1C802	STR												
	11	8	4'- 0"	1W801	STR												
	93	9	9'- 9"	1C901	STR												
SECTION 2																	
	32	5	31'- 11"	2C501A	STR												
	16	5	29'- 9"	2C501B	STR												
	93	5	3'- 11"	2C502	STR												
▲	93	5	10'- 5"	2C503	STR												
	64	5	31'- 11"	2C504A	STR												
	32	5	29'- 9"	2C504B	STR												
	93	5	5'- 3"	2C505	29		2'- 5"	0'- 5"	2'- 5"				2'- 5"		0'- 3"		
	93	6	8'- 10"	2C601	28		4'- 1"	0'- 7"	0'- 8"	3'- 6"			0'- 7"		0'- 5"		
	180	8	10'- 1"	2C801	17		6'- 4"	3'- 9"	---								
▲	180	8	11'- 9"	2C802	STR												
	11	8	4'- 0"	2W801	STR												
✳	94	9	9'- 9"	2C901	STR												
SECTION 3																	
	16	5	31'- 11"	3B501A	STR												
	16	5	29'- 9"	3B501B	STR												
	62	5	3'- 11"	3B502	STR												
▲	62	5	10'- 7"	3B503	STR												
	30	5	31'- 11"	3B504A	STR												
	30	5	29'- 9"	3B504B	STR												
	62	5	5'- 3"	3B505	29		2'- 5"	0'- 5"	2'- 5"				2'- 5"		0'- 3"		
	62	6	8'- 10"	3B601	28		4'- 1"	0'- 7"	0'- 8"	3'- 6"			0'- 7"		0'- 5"		
✳	121	7	9'- 3"	3B701	17		5'- 6"	3'- 9"	---								
✳ ▲	121	7	10'- 7"	3B702	STR												
	10	8	4'- 0"	3W801	STR												
	62	9	9'- 3"	3B901	STR												
SECTION 4																	
	16	5	31'- 11"	4B501A	STR												
	16	5	29'- 9"	4B501B	STR												
	62	5	3'- 11"	4B502	STR												
▲	62	5	9'- 3"	4B503	STR												
	30	5	31'- 11"	4B504A	STR												
	30	5	29'- 9"	4B504B	STR												
	62	5	5'- 3"	4B505	29		2'- 5"	0'- 5"	2'- 5"				2'- 5"		0'- 3"		
	62	6	8'- 10"	4B601	28		4'- 1"	0'- 7"	0'- 8"	3'- 6"			0'- 7"		0'- 5"		
	120	7	9'- 3"	4B701	17		5'- 6"	3'- 9"	---								
▲	120	7	9'- 3"	4B702	STR												
	10	8	4'- 0"	4W801	STR												
	62	9	9'- 3"	4B901	STR												

ITEM	EACH	SIZE	LENGTH	MARK	TYPE	A	B	C	D	E	F	G	H	J	K	R	O
SECTION 5																	
	15	5	31'- 11"	5A501A	STR												
	15	5	29'- 9"	5A501B	STR												
	62	5	3'- 11"	5A502	STR												
▲	62	5	7'- 9"	5A503	STR												
	26	5	31'- 11"	5A504A	STR												
	26	5	29'- 9"	5A504B	STR												
	62	5	5'- 3"	5A505	29		2'- 5"	0'- 5"	2'- 5"				2'- 5"		0'- 3"		
	62	6	8'- 10"	5A601	28		4'- 1"	0'- 7"	0'- 8"	3'- 6"			0'- 7"		0'- 5"		
	62	7	8'- 9"	5A701	STR												
✳ ▲	63	9	11'- 6"	5A901	17		7'- 9"	3'- 9"									

~ NOTES ~

1. UNLESS OTHERWISE DESIGNATED, ALL BAR REINFORCEMENT FOR CONCRETE IN SIZES UP TO AND INCLUDING NO. 18 SHALL CONFORM TO THE REQUIREMENTS OF THE "SPECIFICATIONS FOR DEFORMED BILLET-STEEL BARS FOR CONCRETE REINFORCEMENT", AASHTO M 31 (ASTM A 615-SI). ALL BARS SHALL BE GRADE 60, UNLESS OTHERWISE DESIGNATED.
2. FOR TYPICAL BENDING DETAILS, RECOMMENDED PIN DIAMETER "D" OF BENDS AND HOOKS, AND OTHER STANDARD PRACTICE, SEE CURRENT CONCRETE REINFORCING STEEL INSTITUTE "MANUAL OF STANDARD PRACTICE".
3. BARS WHICH REQUIRE MORE ACCURATE BENDING THAN STANDARD PRACTICES SHOULD HAVE LIMITS INDICATED.
4. ALL DIMENSIONS ARE OUT TO OUT OF BAR EXCEPT "A" AND "G" ON STANDARD 180 DEGREE AND 135 DEGREE HOOKS.
5. "J" DIMENSION ON 180 DEGREE HOOKS TO BE SHOWN ONLY WHERE NECESSARY TO RESTRICT HOOK SIZE. OTHERWISE, STANDARD HOOKS ARE TO BE USED.
6. "H" DIMENSION ON STIRRUPS TO BE SHOWN ONLY WHEN NECESSARY TO MAINTAIN CLEARANCES.
7. WHERE SLOPE DIFFERS FROM 45 DEGREES, DIMENSIONS "H" AND "K" MUST BE SHOWN.
8. ▲ DENOTES BARS TO BE CUT IN FIELD.
9. ✳ DENOTES ONE EXTRA BAR ADDED FOR TESTING PURPOSES.
10. △ DENOTES TWO EXTRA BARS ADDED FOR TESTING PURPOSES.
11. E DENOTES REINFORCING STEEL TO BE EPOXY COATED.

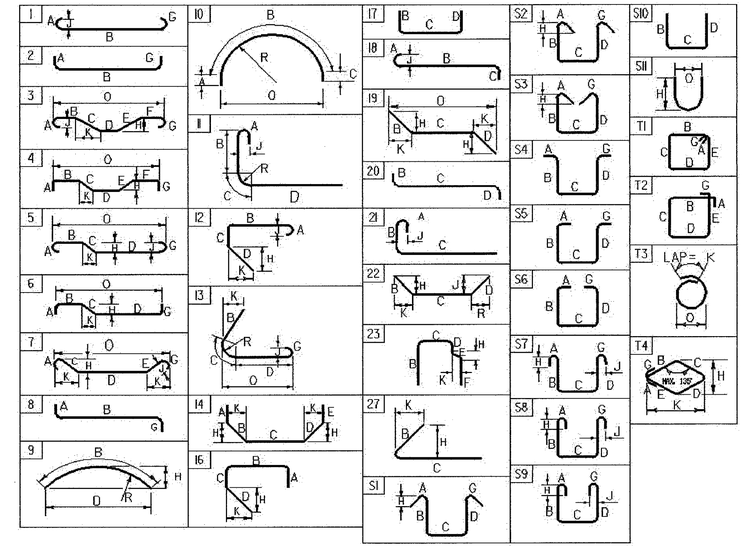

ASTM STANDARD REINFORCING BARS

BAR SIZE DESIGNATION	WEIGHT POUNDS PER FOOT	NOMINAL DIMENSIONS ROUND SECTION		
		DIAMETER INCHES	AREA INCHES^2	PERIMETER INCHES
#3	0.376	0.375	0.11	1.178
#4	0.668	0.500	0.20	1.571
#5	1.043	0.625	0.31	1.963
#6	1.502	0.750	0.44	2.356
#7	2.044	0.875	0.60	2.749
#8	2.670	1.000	0.79	3.142
#9	3.400	1.128	1.00	3.544
#10	4.303	1.270	1.27	3.990
#11	5.313	1.410	1.56	4.430
#14	7.65	1.693	2.25	5.32
#18	13.60	2.257	4.00	7.09

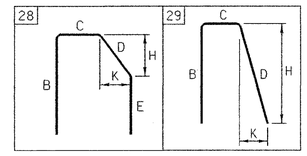

CATAMOUNT TRAIL WALL

PROJECT NAME: **SEARSBURG-WILMINGTON**
PROJECT NUMBER: **NHF 010-1 (18)**

FILE NAME: **78d096\Structures\sd096wa1rss.xls** PLOT DATE: **2/22/02**
PROJECT MANAGER: **R. R. WHITCOMB** DRAWN BY: **G. ROY**
DESIGNED BY: **J. LACROIX** 82507 CHECKED BY: **G. ROY**
REINFORCING STEEL SCHEDULE SHEET #1 SHEET 246 OF 435

STATE OF VERMONT
AGENCY OF TRANSPORTATION

QUANTITY SHEET

SUMMARY OF ESTIMATED QUANTITIES	TOTALS				DESCRIPTIONS			DETAILED SUMMARY OF QUANTITIES		
	WALL QUANTITY	ROUND	GRAND TOTAL	FINAL	UNIT	ITEMS	ITEM NUMBER	QUANTITIES	UNIT	ITEMS
	1570				CY	STRUCTURE EXCAVATION	204.25			
	1700				CY	GRANULAR BACKFILL FOR STRUCTURES	204.30			
	483				CY	CONCRETE, CLASS B (HPC-B) (MOD.)	501.25			
	51530				LB	REINFORCING STEEL	507.15			
	405				SY	STONE MASONRY FACING (MOD.)	602.25			

PROJECT NAME: **SEARSBURG-WILNINGTON**
PROJECT NUMBER: **NH F010-1(18)**

FILE NAME: **sd096wal2qty**
PROJECT LEADER: **R. Whitcomb**
DESIGNED BY: **R. Whitcomb**
MORSE WALL QUANTITY SHEET

PLOT DATE: **2/25/02**
DRAWN BY: **J. LaCroix**
CHECKED BY: **J. LaCroix**
BRGOO
SHEET 247 OF 435

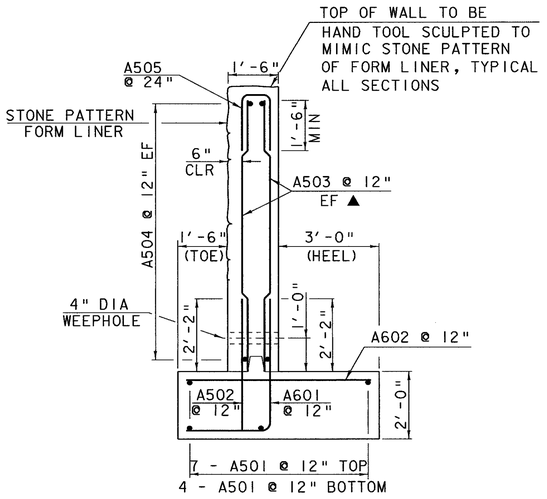

RETAINING WALL TYPICAL A

SECTION 1 & 6
SCALE: ½" = 1'-0"
10.5' DESIGN HT.

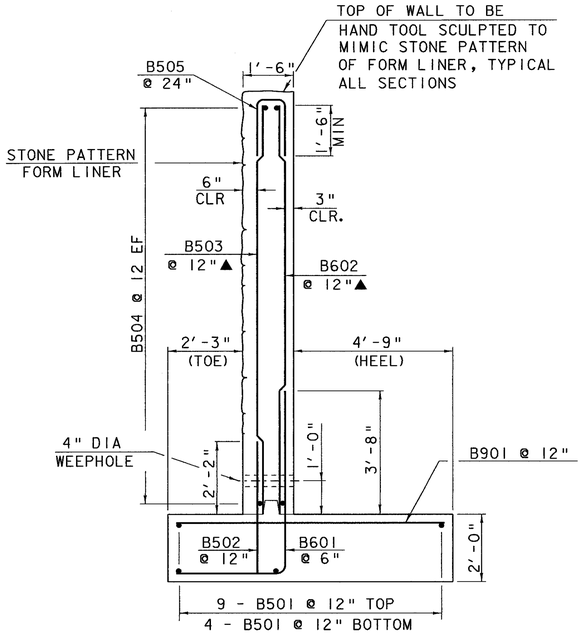

RETAINING WALL TYPICAL B

SECTIONS: 2, 3, 4, & 5
SCALE: ½" = 1'-0"
14.6' DESIGN HT.

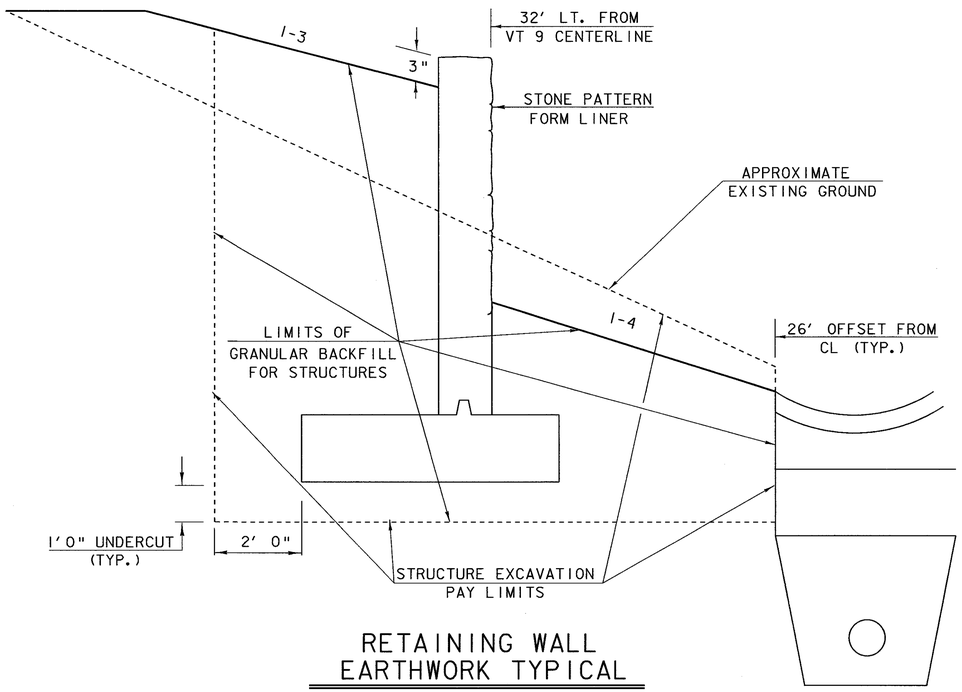

RETAINING WALL EARTHWORK TYPICAL

(NOT TO SCALE)

GENERAL NOTES

1. STONE PATTERN TO EXTEND 6" TO 12" BELOW GROUNDLINE
2. STONE PATTERN FORM LINER TO BE USED ON EXPOSED FACE ONLY
3. WATER REPELLENT SHALL BE APPLIED TO ALL EXPOSED CONCRETE SURFACES
4. ALL CONCRETE SHALL BE CONCRETE, CLASS B - (HPC-B) (MODIFIED)
5. ALL EXPOSED EDGES OF NEW CONCRETE SHALL BE CHAMFERED 1" X 1". JOINTS AND SCORE MARKS IN CONCRETE SHALL BE CONSTRUCTED AS SHOWN IN THE PLANS OR AS DIRECTED BY THE RESIDENT ENGINEER.
6. THE KEY IN CONCRETE CONSTRUCTION JOINTS SHALL BE MONOLITHIC AND CONTINUOUS FOR THE FULL LENGTH OF THE JOINT. ANY UPWARD KEY SHALL BE PLACED INTEGRALLY WITH THE CONCRETE BELOW THE JOINT.
7. FORM LINER PATTERN SHALL BE CUSTOM-ROCK INTERNATIONAL PATTERN NUMBER 11003 (RUSTIC ASHLAR) OR EQUIVALENT.

NOTE:

NF = NEAR FACE
FF = FAR FACE
EF = EACH FACE
▲ = CUT TO FIT IN FIELD
3" CLR. UNLESS OTHERWISE NOTED
2'-2" BAR LAP UNLESS OTHERWISE NOTED

STATE OF VERMONT
AGENCY OF TRANSPORTATION

Town Of SEARSBURG-WILMINGTON	Bridge No.
Highway No. VT 9	Log Sta. / Surv. Sta.
MORSE WALL	
WALL TYPICAL SECTIONS	
Designed By J. LACROIX	Drawn By J. LACROIX
Checked By G. ROY Date 2/02	Project Manager R.R. WHITCOMB Date 2/02
PROJECT SEARSBURG-WILMINGTON	PROJECT NO. NHF 010-1(18)
I.G.C. Info.78d096\Structures\sd096typ2a.dgn sd096typ2.i	
Bridge Sheet No. BR601	Sheet 248 of 435

PLOTTED 25-FEB-2002

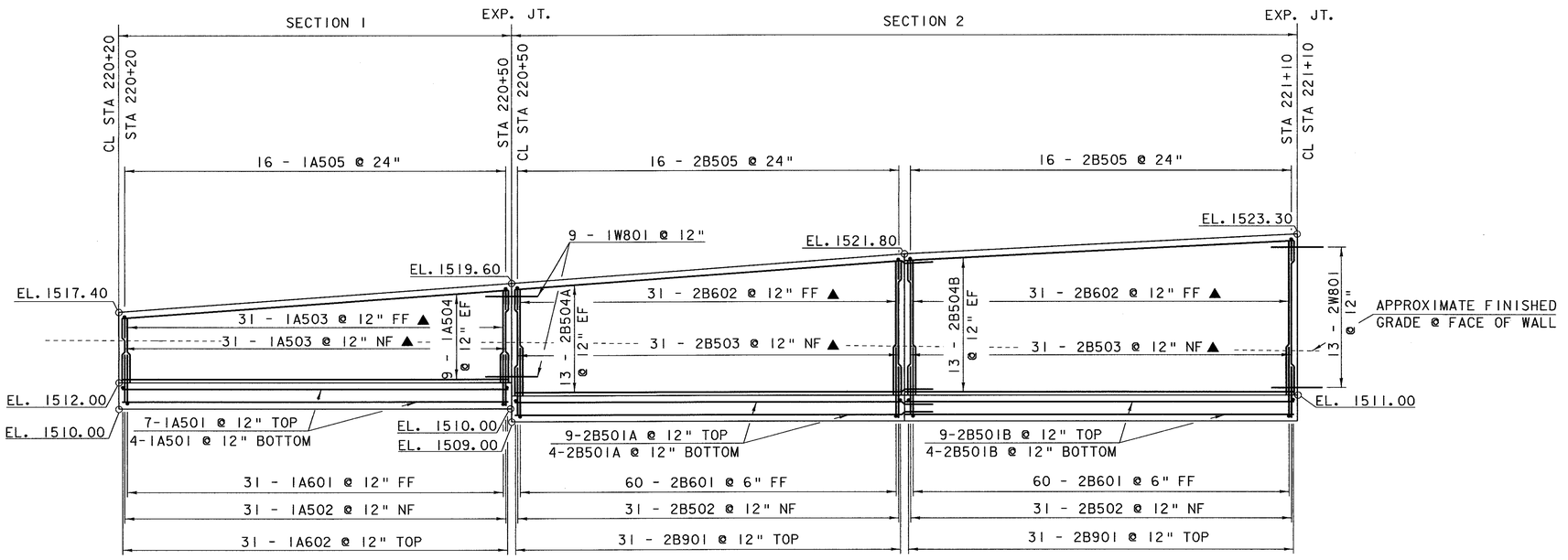

ELEVATION

SCALE: 1" = 5'-0"

SECTION	DESIGN
1	A
2	B

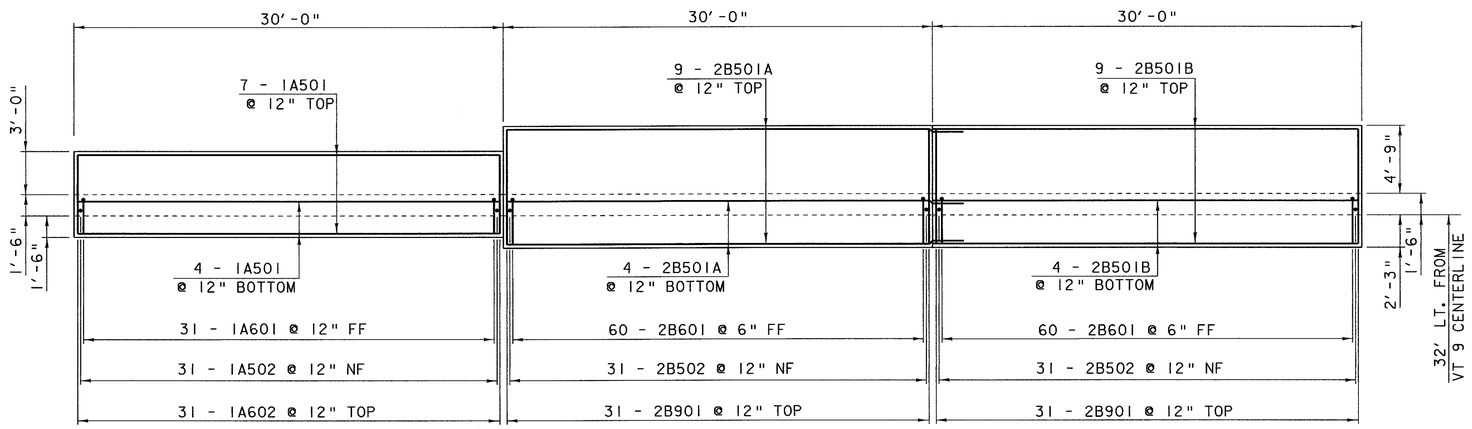

FOOTING PLAN

SCALE: 1" = 5'-0"

NOTE:

NF = NEAR FACE
FF = FAR FACE
EF = EACH FACE
▲ = CUT TO FIT IN FIELD
3" CLR. UNLESS OTHERWISE NOTED
2'-2" BAR LAP UNLESS OTHERWISE NOTED

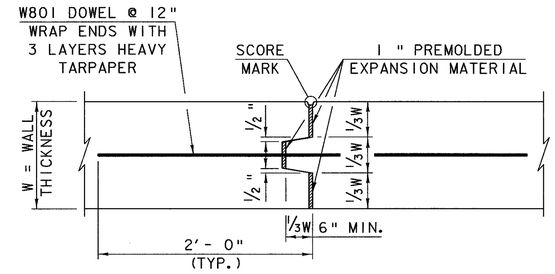

TYPICAL CONCRETE EXPANSION JOINT

(IN WALL ONLY. PAINT SIDE OF KEY WITH BITUMEN TO PREVENT BONDING.)

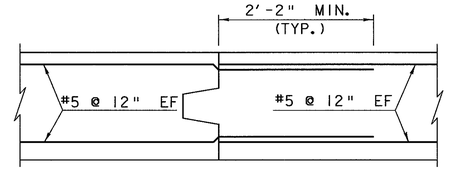

TYPICAL CONCRETE CONSTRUCTION JOINT

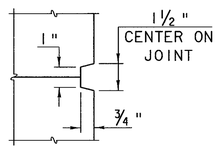

SCORE MARK DETAIL

NOT TO SCALE

STATE OF VERMONT
AGENCY OF TRANSPORTATION

Town Of SEARSBURG-WILMINGTON	Bridge No.
Highway No. VT 9	Log Sta. / Surv. Sta.

MORSE WALL

PLAN AND ELEVATION SECTIONS 1 & 2

Designed By J. LACROIX	Drawn By J. LACROIX
Checked By G. ROY Date 2/02	Bridge Design Supervisor R.R. WHITCOMB Date 2/02
PROJECT SEARSBURG-WILMINGTON	PROJECT NO. NHF 010-1(18)
I.G.C. Info.78d096\Structures\sd096typ2a.dgn	sd096wa12a.i
Bridge Sheet No. BR602	Sheet 249 of 435

PLOTTED 25-FEB-2002

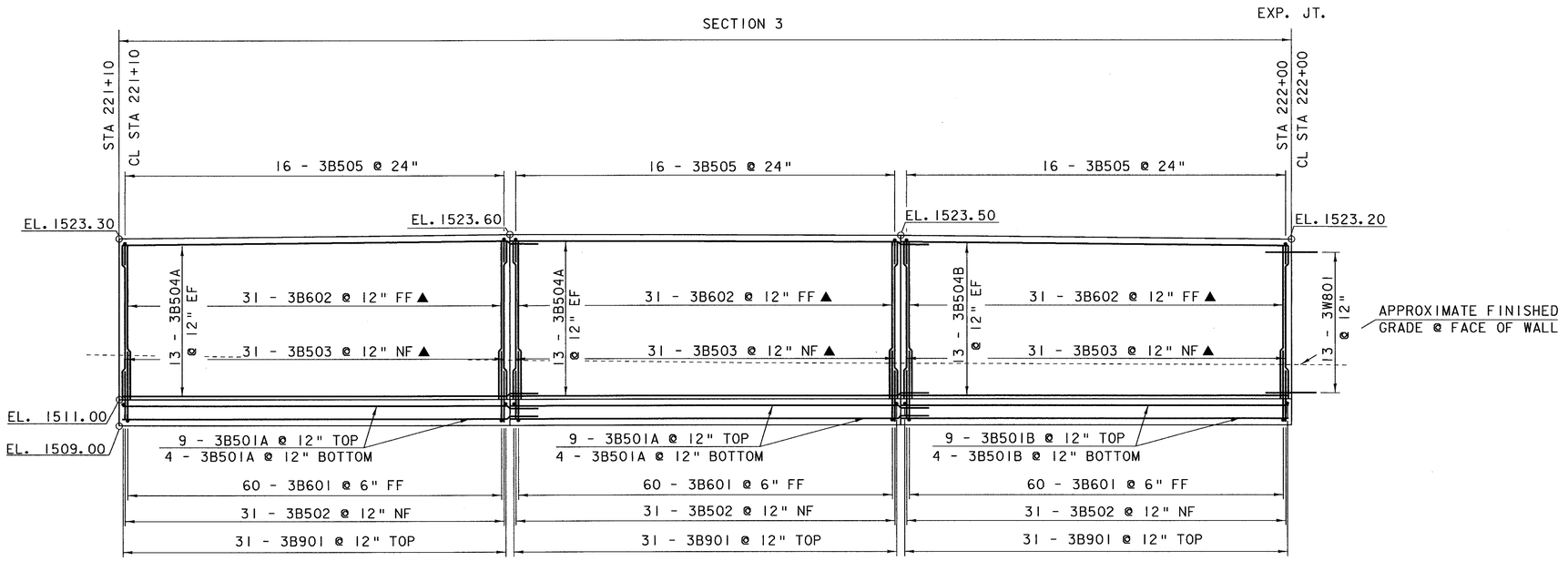

ELEVATION

SCALE: 1" = 5'-0"

SECTION	DESIGN
3	B

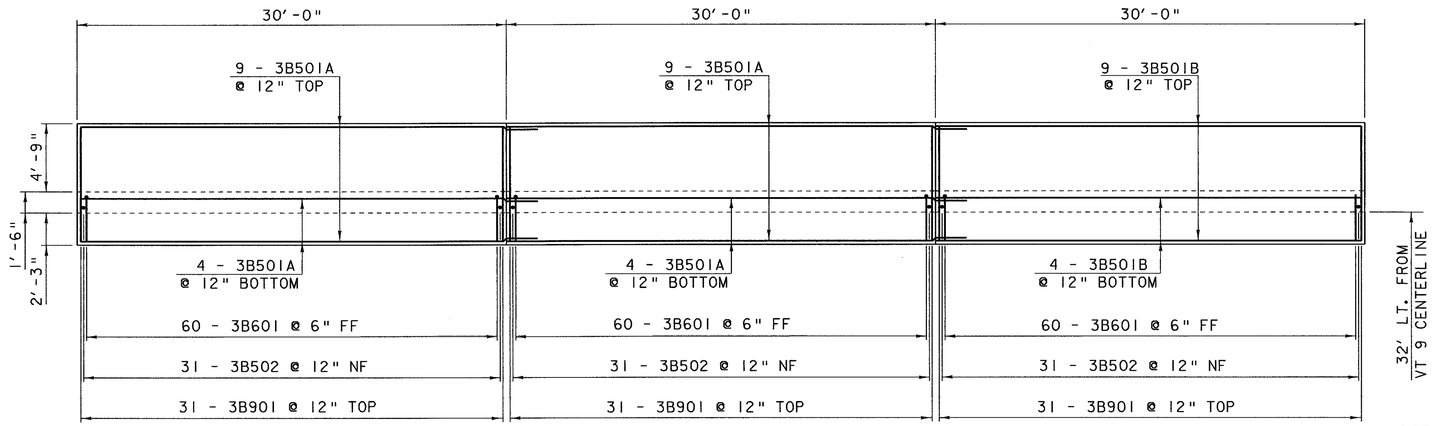

FOOTING PLAN

SCALE: 1" = 5'-0"

NOTE:

NF = NEAR FACE
FF = FAR FACE
EF = EACH FACE
▲ = CUT TO FIT IN FIELD
3" CLR. UNLESS OTHERWISE NOTED
2'-2" BAR LAP UNLESS OTHERWISE NOTED

STATE OF VERMONT
AGENCY OF TRANSPORTATION

Town Of SEARSBURG-WILMINGTON	Bridge No.
Highway No. VT 9	Log Sta. / Surv. Sta.
MORSE WALL	
PLAN AND ELEVATION SECTION 3	
Designed By J. LACROIX	Drawn By J. LACROIX
Checked By G. ROY Date 2/02	Bridge Design Supervisor R. R. WHITCOMB Date 2/02
PROJECT SEARSBURG-WILMINGTON	PROJECT NO. NHF 010-1(18)
I.G.C. Info.78d096\Structures\sd096typ2a.dgn sd096wa12b.i	
Bridge Sheet No. BR603	Sheet 250 of 435

PLOTTED 25-FEB-2002

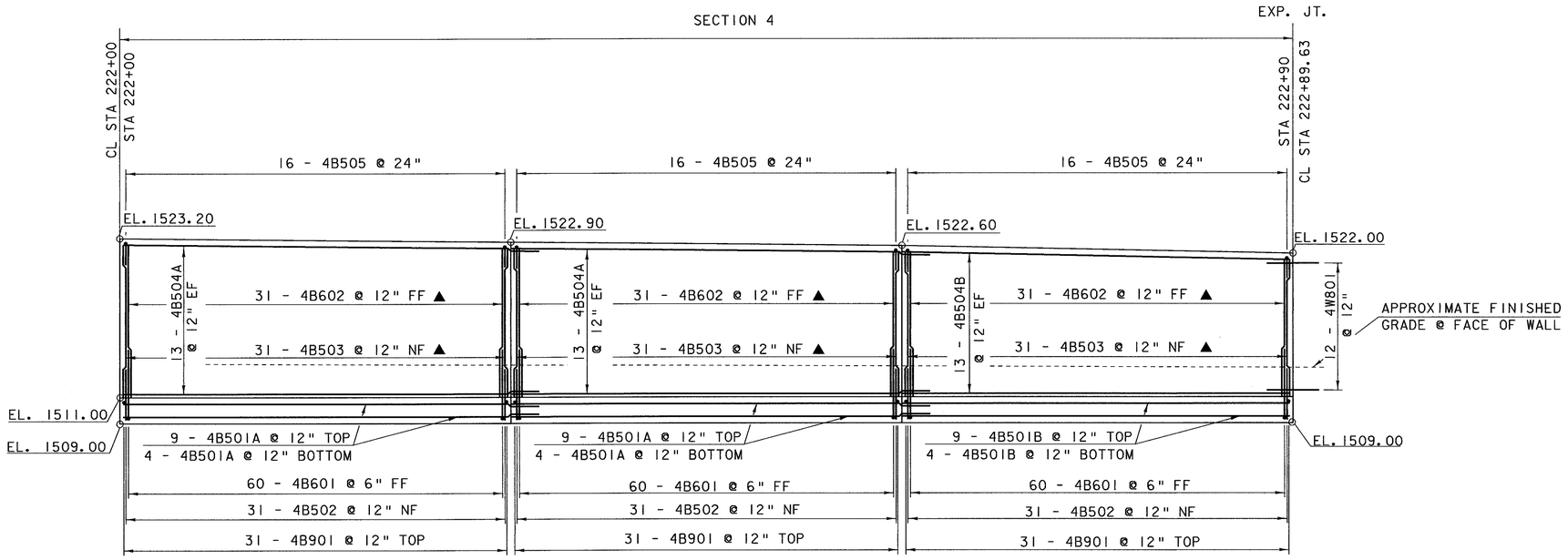

ELEVATION

SCALE: 1" = 5'-0"

SECTION	DESIGN
4	B

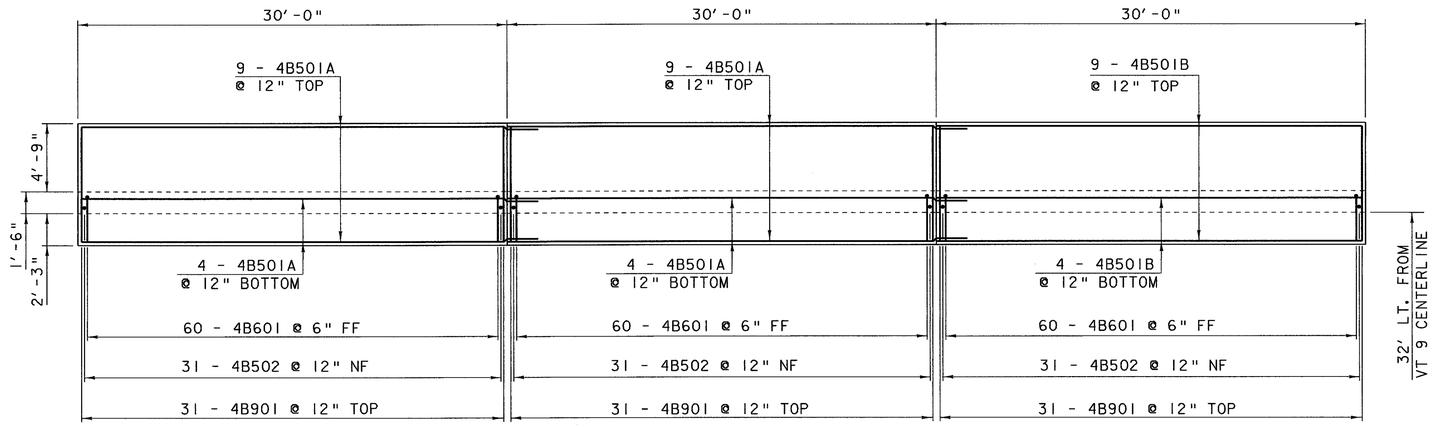

FOOTING PLAN

SCALE: 1" = 5'-0"

NOTE:

NF = NEAR FACE
FF = FAR FACE
EF = EACH FACE
▲ = CUT TO FIT IN FIELD
3" CLR. UNLESS OTHERWISE NOTED
2'-2" BAR LAP UNLESS OTHERWISE NOTED

STATE OF VERMONT
AGENCY OF TRANSPORTATION

Town Of SEARSBURG-WILMINGTON	Bridge No.
	Log Sta.
Highway No. VT 9	Surv. Sta.

MORSE WALL

PLAN AND ELEVATION SECTION 4

Designed By J. LACROIX	Drawn By J. LACROIX
Checked By G. ROY Date 2/02	Bridge Design Supervisor R.R. WHITCOMB Date 2/02
PROJECT SEARSBURG-WILMINGTON	PROJECT NO. NHF 010-1(18)
LG.C. Info.78d096\Structures\sd096typ2a.dgn	sd096wal2c.i
Bridge Sheet No. BR604	Sheet 251 of 435

PLOTTED 25-FEB-2002

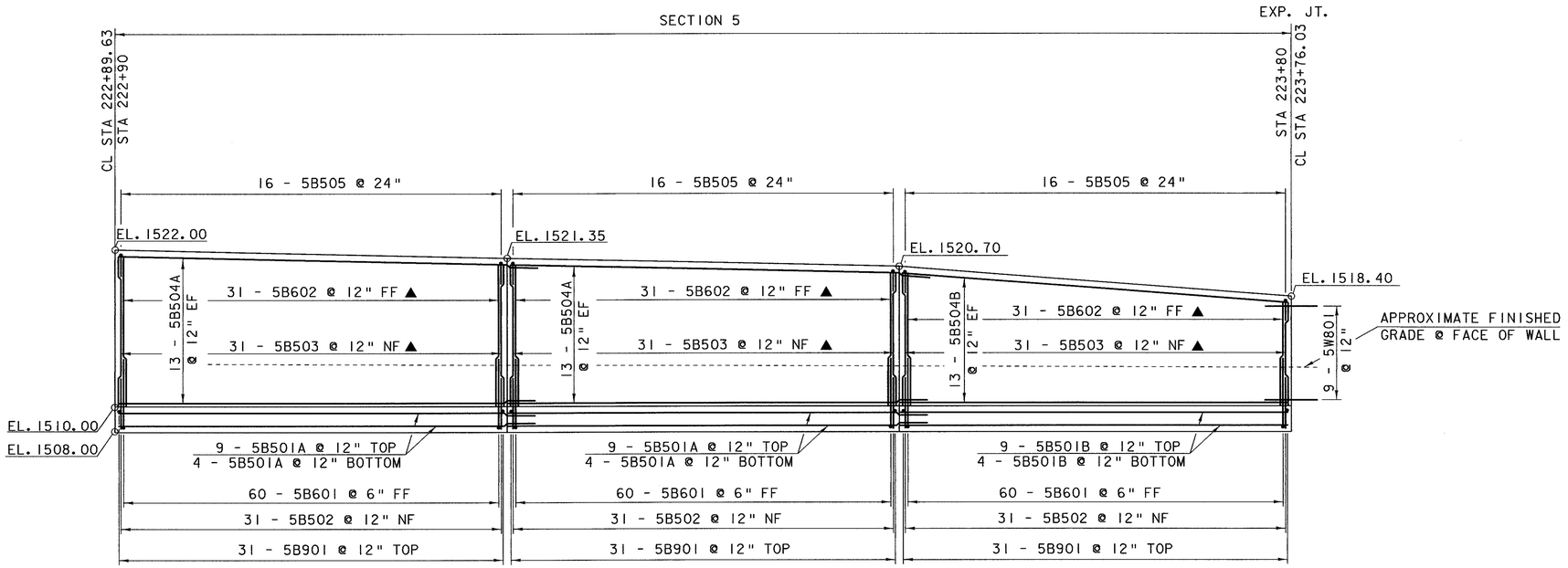

ELEVATION

SCALE: 1" = 5'-0"

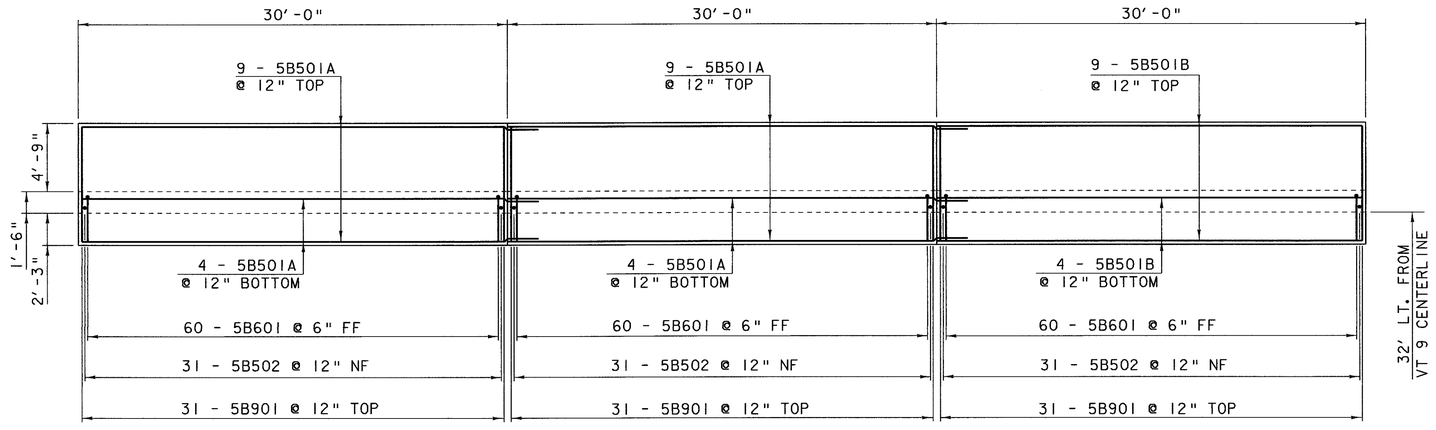

FOOTING PLAN

SCALE: 1" = 5'

SECTION	DESIGN
5	B

NOTE:

NF = NEAR FACE
FF = FAR FACE
EF = EACH FACE
▲ = CUT TO FIT IN FIELD
3" CLR. UNLESS OTHERWISE NOTED
2'-2" BAR LAP UNLESS OTHERWISE NOTED

STATE OF VERMONT
AGENCY OF TRANSPORTATION

Town Of SEARSBURG-WILMINGTON	Bridge No.
	Log Sta.
Highway No. VT 9	Surv. Sta.

MORSE WALL

PLAN AND ELEVATION SECTION 5

Designed By J. LACROIX	Drawn By J. LACROIX
Checked By G. ROY Date 2/02	Bridge Design Supervisor R.R. WHITCOMB Date 2/02
PROJECT SEARSBURG-WILMINGTON	PROJECT NO. NHF 010-1(18)

I.G.C. Info.78d096\Structures\sd096typ2a.dgn sd096wa12d.i

Bridge Sheet No. BR605 Sheet 252 of 435

PLOTTED 25-FEB-2002

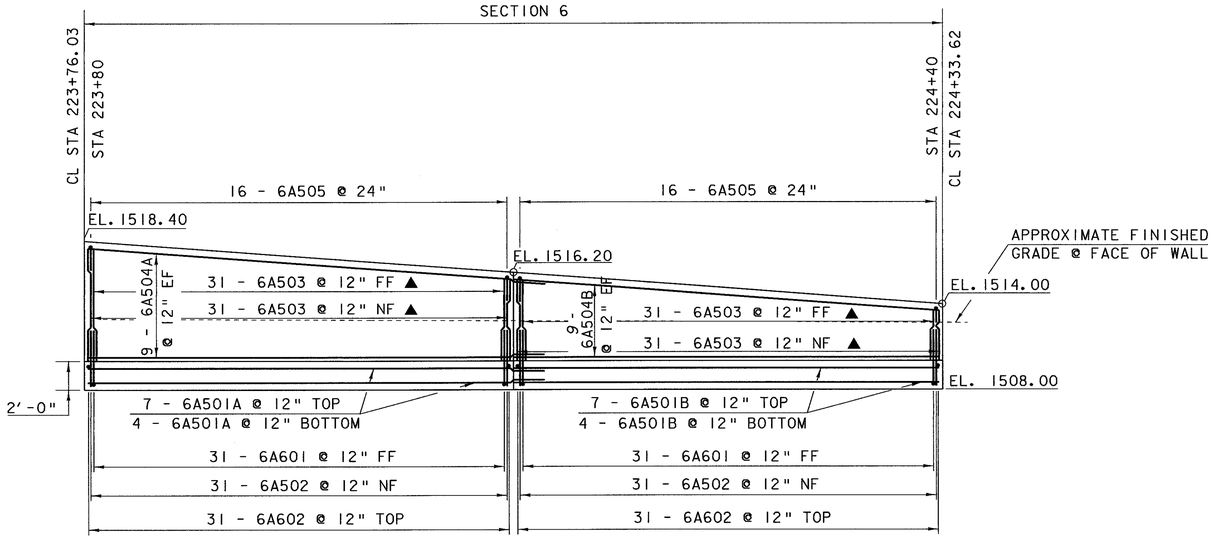

ELEVATION

SCALE: 1" = 5'-0"

SECTION	DESIGN
6	A

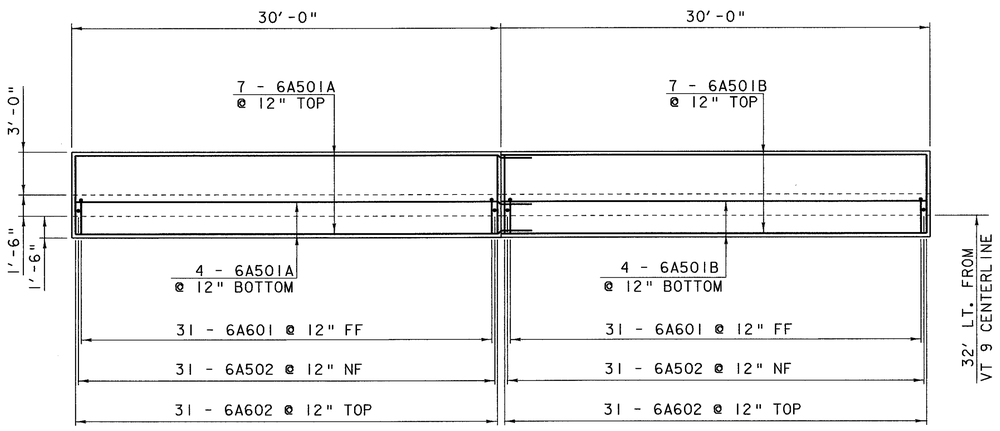

FOOTING PLAN

SCALE: 1" = 5'-0"

NOTE:

NF = NEAR FACE
FF = FAR FACE
EF = EACH FACE
▲ = CUT TO FIT IN FIELD
3" CLR. UNLESS OTHERWISE NOTED
2'-2" BAR LAP UNLESS OTHERWISE NOTED

STATE OF VERMONT
AGENCY OF TRANSPORTATION

Town Of SEARSBURG-WILMINGTON	Bridge No.
Highway No. VT 9	Log Sta. / Surv. Sta.

MORSE WALL

PLAN AND ELEVATION SECTION 6

Designed By J. LACROIX	Drawn By J. LACROIX
Checked By G. ROY Date 2/02	Bridge Design Supervisor R. R. WHITCOMB Date 2/02
PROJECT SEARSBURG-WILMINGTON	PROJECT NO. NHF 010-1(18)

I.G.C. Info.78d096\Structures\sd096typ2a.dgn sd096wal2e.i

Bridge Sheet No. BR606 Sheet 253 of 435

PLOTTED 25-FEB-2002

STATE OF VERMONT
AGENCY OF TRANSPORTATION

REINFORCING STEEL SCHEDULE

ITEM	EACH	SIZE	LENGTH	MARK	TYPE	A	B	C	D	E	F	G	H	J	K	R	O
SECTION 1																	
	11	5	29'- 6"	1A501	STR												
	31	5	3'- 11"	1A502	STR												
✳ ▲	63	5	7'- 4"	1A503	STR												
	18	5	29'- 6"	1A504	STR												
	16	5	3'- 9"	1A505	17		1'- 6"	0'- 9"	1'- 6"								
	31	6	6'- 5"	1A601	17		2'- 6"	3'- 11"	---								
✳	32	6	5'- 6"	1A602	STR												
✳	10	8	4'- 0"	1W801	STR												
SECTION 2																	
	13	5	31'- 11"	2B501A	STR												
	13	5	29'- 9"	2B501B	STR												
	62	5	3'- 11"	2B502	STR												
▲	62	5	12'- 0"	2B503	STR												
	26	5	31'- 11"	2B504A	STR												
	26	5	29'- 9"	2B504B	STR												
	32	5	3'- 9"	2B505	17		1'- 6"	0'- 9"	1'- 6"								
✳	121	6	8'- 8"	2B601	17		3'- 3"	5'- 5"	---								
▲	62	6	12'- 0"	2B602	STR												
✳	14	8	4'- 0"	2W801	STR												
✳	63	9	8'- 0"	2B901	STR												
SECTION 3																	
	26	5	31'- 11"	3B501A	STR												
	13	5	29'- 9"	3B501B	STR												
	93	5	3'- 11"	3B502	STR												
▲	93	5	12'- 4"	3B503	STR												
	52	5	31'- 11"	3B504A	STR												
	26	5	29'- 9"	3B504B	STR												
	48	5	3'- 9"	3B505	17		1'- 6"	0'- 9"	1'- 6"								
	180	6	8'- 8"	3B601	17		3'- 3"	5'- 5"	---								
▲	93	6	12'- 4"	3B602	STR												
	13	8	4'- 0"	3W801	STR												
✳	94	9	8'- 0"	3B901	STR												
SECTION 4																	
	26	5	31'- 11"	4B501A	STR												
	13	5	29'- 9"	4B501B	STR												
	93	5	3'- 11"	4B502	STR												
▲	93	5	11'- 11"	4B503	STR												
	52	5	31'- 11"	4B504A	STR												
	26	5	29'- 9"	4B504B	STR												
	48	5	3'- 9"	4B505	17		1'- 6"	0'- 9"	1'- 6"								
	180	6	8'- 8"	4B601	17		3'- 3"	5'- 5"	---								
▲	93	6	11'- 11"	4B602	STR												
	12	8	4'- 0"	4W801	STR												
	93	9	8'- 0"	4B901	STR												
SECTION 5																	
	26	5	31'- 11"	5B501A	STR												
	13	5	29'- 9"	5B501B	STR												
	93	5	3'- 11"	5B502	STR												
▲	93	5	11'- 9"	5B503	STR												
	52	5	31'- 11"	5B504A	STR												
	26	5	29'- 9"	5B504B	STR												
	48	5	3'- 9"	5B505	17		1'- 6"	0'- 9"	1'- 6"								
	180	6	8'- 8"	5B601	17		3'- 3"	5'- 5"	---								
▲	93	6	11'- 9"	5B602	STR												
	9	8	4'- 0"	5W801	STR												
	93	9	8'- 0"	5B901	STR												

ITEM	EACH	SIZE	LENGTH	MARK	TYPE	A	B	C	D	E	F	G	H	J	K	R	O
SECTION 6																	
	11	5	31'- 11"	6A501A	STR												
	11	5	29'- 9"	6A501B	STR												
	62	5	3'- 11"	6A502	STR												
✳ ▲	125	5	8'- 2"	6A503	STR												
	18	5	31'- 11"	6A504A	STR												
	18	5	29'- 9"	6A504B	STR												
	32	5	3'- 9"	6A505	17		1'- 6"	0'- 9"	1'- 6"								
	62	6	6'- 5"	6A601	17		2'- 6"	3'- 11"	---								
	62	6	5'- 6"	6A602	STR												

~ NOTES ~

1. UNLESS OTHERWISE DESIGNATED, ALL BAR REINFORCEMENT FOR CONCRETE IN SIZES UP TO AND INCLUDING NO. 18 SHALL CONFORM TO THE REQUIREMENTS OF THE "SPECIFICATIONS FOR DEFORMED BILLET-STEEL BARS FOR CONCRETE REINFORCEMENT", AASHTO M 31 (ASTM A 615-SI). ALL BARS SHALL BE GRADE 60, UNLESS OTHERWISE DESIGNATED.
2. FOR TYPICAL BENDING DETAILS, RECOMMENDED PIN DIAMETER "D" OF BENDS AND HOOKS, AND OTHER STANDARD PRACTICE, SEE CURRENT CONCRETE REINFORCING STEEL INSTITUTE "MANUAL OF STANDARD PRACTICE".
3. BARS WHICH REQUIRE MORE ACCURATE BENDING THAN STANDARD PRACTICES SHOULD HAVE LIMITS INDICATED.
4. ALL DIMENSIONS ARE OUT TO OUT OF BAR EXCEPT "A" AND "G" ON STANDARD 180 DEGREE AND 135 DEGREE HOOKS.
5. "J" DIMENSION ON 180 DEGREE HOOKS TO BE SHOWN ONLY WHERE NECESSARY TO RESTRICT HOOK SIZE. OTHERWISE, STANDARD HOOKS ARE TO BE USED.
6. "H" DIMENSION ON STIRRUPS TO BE SHOWN ONLY WHEN NECESSARY TO MAINTAIN CLEARANCES.
7. WHERE SLOPE DIFFERS FROM 45 DEGREES, DIMENSIONS "H" AND "K" MUST BE SHOWN.
8. ▲ DENOTES BARS TO BE CUT IN FIELD.
9. ✳ DENOTES ONE EXTRA BAR ADDED FOR TESTING PURPOSES.
10. △ DENOTES TWO EXTRA BARS ADDED FOR TESTING PURPOSES.
11. E DENOTES REINFORCING STEEL TO BE EPOXY COATED.

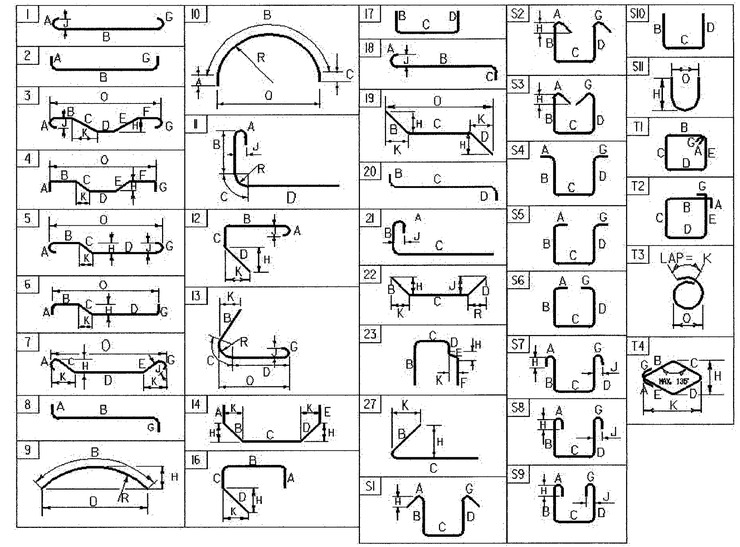

ASTM STANDARD REINFORCING BARS

BAR SIZE DESIGNATION	WEIGHT POUNDS PER FOOT	NOMINAL DIMENSIONS ROUND SECTION		
		DIAMETER INCHES	AREA INCHES^2	PERIMETER INCHES
#3	0.376	0.375	0.11	1.178
#4	0.668	0.500	0.20	1.571
#5	1.043	0.625	0.31	1.963
#6	1.502	0.750	0.44	2.356
#7	2.044	0.875	0.60	2.749
#8	2.670	1.000	0.79	3.142
#9	3.400	1.128	1.00	3.544
#10	4.303	1.270	1.27	3.990
#11	5.313	1.410	1.56	4.430
#14	7.65	1.693	2.25	5.32
#18	13.60	2.257	4.00	7.09

MORSE WALL

PROJECT NAME: **SEARSBURG - WILMINGTON**
PROJECT NUMBER: **NHF 010-1 (18)**

FILE NAME: **78d096\Structures\sd096wa2rss.xls** PLOT DATE: **2/25/02**
PROJECT MANAGER: **R. R. WHITCOMB** DRAWN BY: **G. ROY**
DESIGNED BY: **J. LACROIX** B2607 CHECKED BY: **G. ROY**
REINFORCING STEEL SCHEDULE SHEET #1 SHEET 254 OF 435

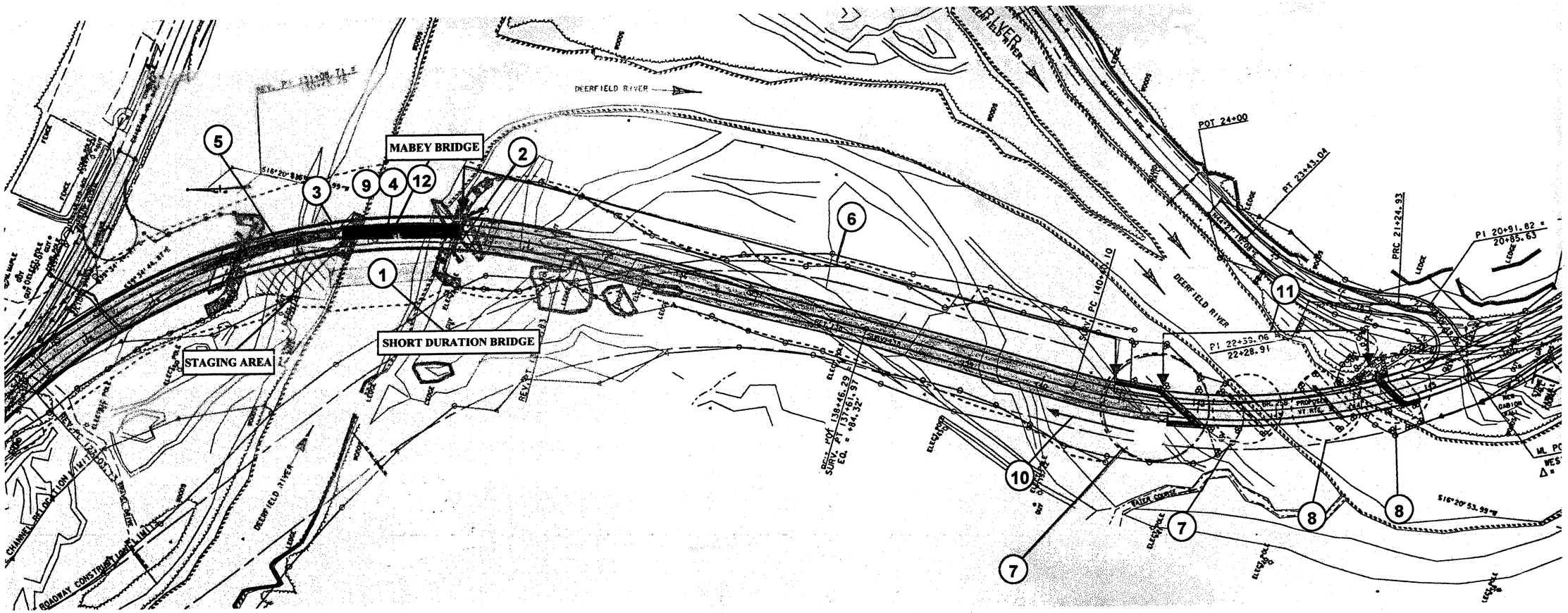

1. BUILD SHORT DURATION BRIDGE ACROSS DEERFIELD RIVER WEST OF PROPOSED BRIDGE 25A. BRIDGE WILL BE A SHORT-TERM STRUCTURE, SOLELY USED TO MOBILIZE EQUIPMENT OVER THE DEERFIELD RIVER THAT WILL BE USED FOR THE CONSTRUCTION OF PROPOSED ABUTMENT 2. SHORT DURATION BRIDGE WILL CONSIST OF STEEL GIRDERS WITH A TIMBER DECK SUPPORTED ON TIMBER MATS PLACED ABOVE ANTICIPATED HIGH WATER DURING TIME OF SERVICE. BRIDGE WILL BE CONSTRUCTED IN STAGING AREA AND SET INTO PLACE WITH A CRANE. ONCE EQUIPMENT IS ACROSS THE RIVER THE BRIDGE WILL BE REMOVED AND STORED IN STAGING AREA. ESTIMATED DURATION: 1 DAY USAGE.
2. CONSTRUCT ABUTMENT 2 FOR PROPOSED BRIDGE 25A TO TOP OF SEAT ELEVATION. CONTRACTOR TO MAKE NECESSARY MODIFICATION TO STEM AND FOOTING TO ACCOMMODATE BEARING SUPPORTS FOR TEMPORARY BRIDGE. ALL MATERIAL REQUIRED FOR THE CONSTRUCTION OF ABUTMENT 2 ON BRIDGE 25A WILL BE TRANSPORTED VIA CRANE SET UP IN STAGING AREA.
3. CONSTRUCT TEMPORARY ABUTMENT 1 FOR HAUL ROAD BRIDGE. THIS ABUTMENT WILL CONSIST OF A TEMPORARY WALL OF INTERLOCKING CONCRETE BLOCKS AND BACKFILL SET ON GEOTEXTILE THAT CAN BE REMOVED AFTER CONSTRUCTION.
4. SET TEMPORARY BRIDGE. TEMPORARY BRIDGE PLACED WITHIN VTRANS RIGHT OF WAY WILL ADHERE TO THE REQUIREMENTS OF PAY ITEM 528 OF THE VAOT STANDARD SPECIFICATIONS.
5. CONSTRUCT HAUL ROAD TO TEMPORARY BRIDGE.
6. CONSTRUCT HAUL ROAD TO PROPOSED BRIDGE 25B.
7. BEGIN CONSTRUCTION ON ABUTMENT 1 AND PIER 1, BRIDGE 25B.
8. CONSTRUCTION OF BRIDGE 25B PIER 2 AND ABUTMENT 2 WILL BE PROGRESSED FROM THE EAST SIDE OF THE DEERFIELD RIVER AND CAN BE STARTED AT ANY TIME.
9. TEMPORARY BRIDGE WILL BE PLACED TO ENABLE CONSTRUCTION TO PROGRESS ON ABUTMENT 1 AND PIER 1 OF BRIDGE 25A.
10. UPON COMPLETION OF BRIDGE 25B ABUTMENT 1, BACKFILL MATERIAL TO FINAL GRADE AND CONTINUE BACKFILL OPERATION TO BRIDGE 25A.
11. UPON COMPLETION OF ALL SUBSTRUCTURES FOR BRIDGE 25B CONSTRUCT THE SUPERSTRUCTURE FOR BRIDGE 25B.
12. REMOVE TEMPORARY BRIDGE WHEN CONSTRUCTION IS COMPLETED ON BRIDGE 25B, AND CONTINUE WITH CONSTRUCTION OF BRIDGE 25A USING BRIDGE 25B FOR ACCESS TO WEST SIDE OF RIVER.

NOT TO SCALE

SEQUENCE FOR CONSTRUCTING BRIDGES AND ENBANKMENTS ON THE WEST SIDE OF THE RIVER

PROJECT NAME: SEARSBURG-WILMINGTON
PROJECT NUMBER: NHF 010-1(18)

FILE NAME: mdesign/78d096/dd096.dgn
PROJECT LEADER: DELLA SANTA
DESIGNED BY: SQUAD B
dd096seq1

PLOT DATE: 25-APR-2001
DRAWN BY: SQUAD B
CHECKED BY:

WORK ZONE SIGNING

NOT TO SCALE

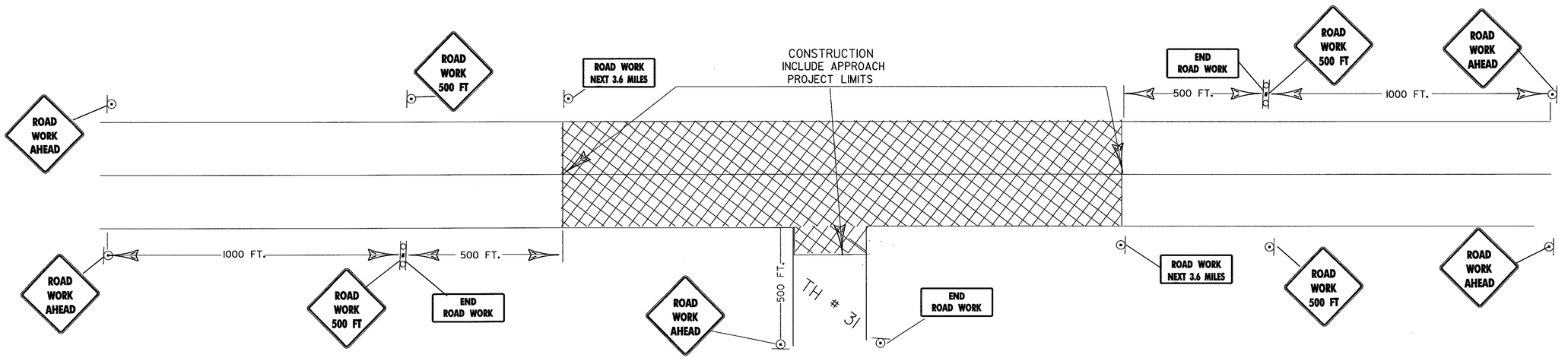

FOR SPECIAL TRAFFIC CONTROL DETAILS TO CONSTRUCT BRIDGE 24, BRIDGE 25, AND THE CATAMOUNT TRAIL RETAINING WALL, REFER TO THIS SHEET BELOW AND SHEETS 261 TO 276 OF 435.
FOR SPECIAL TRAFFIC CONTROL DETAILS TO CONSTRUCT THE GABION WALLS, REFER TO SHEET 93 AND SHEETS 278 TO 283 OF 435.

GENERAL NOTES FOR CONSTRUCTION PHASING AND TRAFFIC CONTROL FOR BRIDGE 24, BRIDGE 25 AND CATAMOUNT TRAIL RETAINING WALL CONSTRUCTION

1) REFER TO SHEETS 261 TO 276 OF 435 FOR SPECIFIC PHASE DETAILS.
2) BUILD PHASE 1 FOR STA. 113+50 TO 118+31.68 (UP TO THE EXISTING BRIDGE).
3) UPON COMPLETION OF PHASE 1, DIRECT TRAFFIC TO CONTINUE ON THIS PORTION OF THE EXISTING ROAD AND BUILD THE RIGHT HALF OF BRIDGE 24 AND ALL OF BRIDGE 25 AS PART OF PHASE 2 CONSTRUCTION.
4) UPON COMPLETION OF PHASE 2, DIRECT TRAFFIC FROM THE EXISTING ROAD ONTO THIS PORTION USING THE COMPLETED RIGHT SIDE OF THE NEW BRIDGE 24 AND THE NEW BRIDGE 25 AND PROCEED TO CONSTRUCT THE CATAMOUNT TRAIL RETAINING WALL (PHASE 3) AND THE REST OF BRIDGE 24.
5) UPON COMPLETION OF PHASE 3, BUILD PHASE 4 (STA. 121+08.47 TO 127+50+-) AND THE REST OF THE FILL AND SUBBASE PORTIONS FROM STA. 113+50 TO THE NEW BRIDGE 25.
6) TEMPORARY TRAFFIC BARRIER AND BARRELS SHALL BE PLACED FOR THE CONSTRUCTION PHASES AS DETERMINED BY THE RESIDENT ENGINEER.

PROJECT NAME: *SEARSBURG-WILMINGTON*	
PROJECT NUMBER: *NHF 010-1(18)*	
FILE NAME: *m:design/78d096/dd096.dgn*	PLOT DATE: 15-FEB-2002
PROJECT LEADER: *DELLA SANTA*	DRAWN BY: *SQUAD B*
DESIGNED BY: *SQUAD B*	CHECKED BY:
	SHEET *260* OF *435*

dd096ton

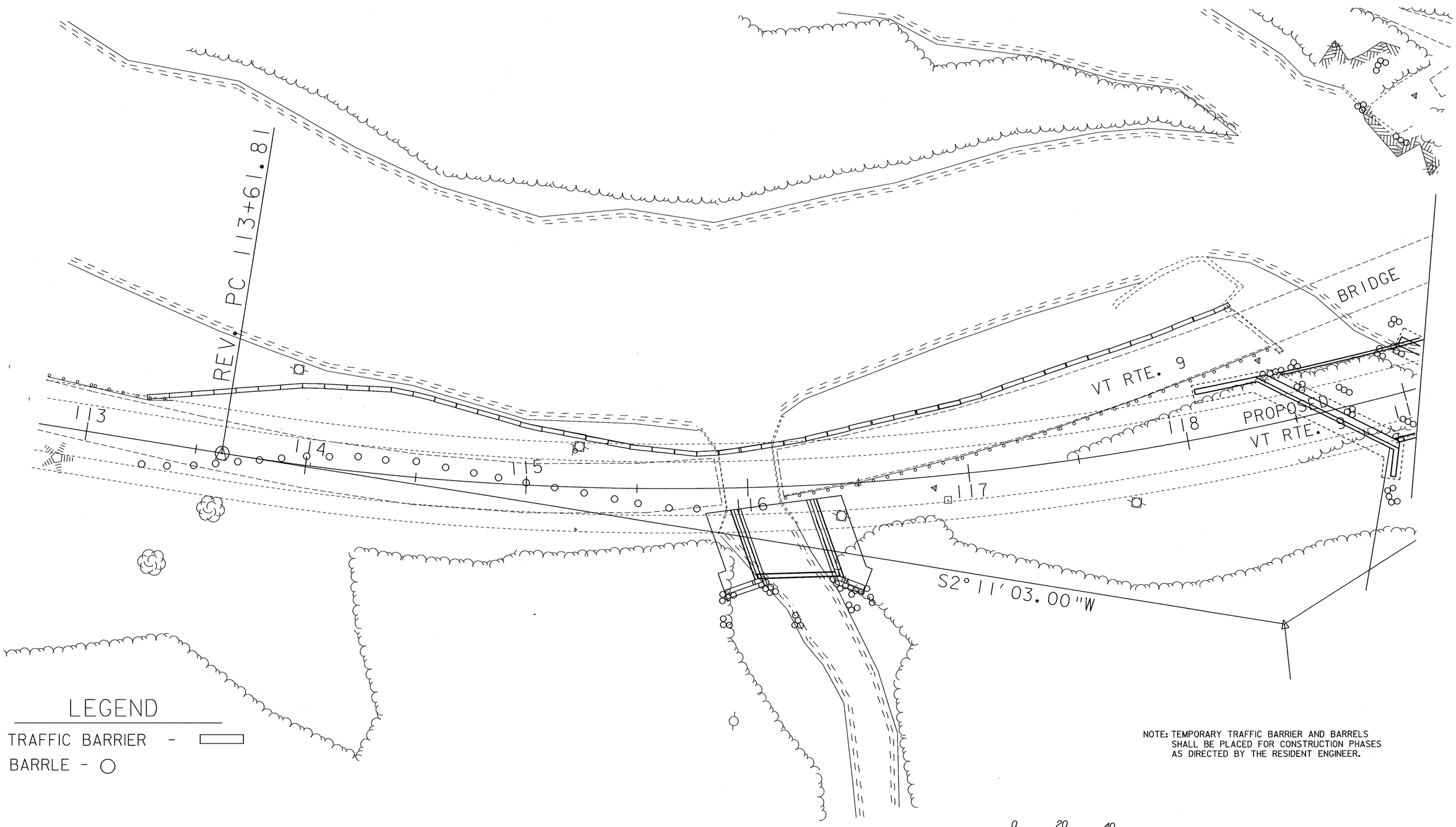

LEGEND

TRAFFIC BARRIER - ▭

BARRLE - ○

NOTE: TEMPORARY TRAFFIC BARRIER AND BARRELS SHALL BE PLACED FOR CONSTRUCTION PHASES AS DIRECTED BY THE RESIDENT ENGINEER.

0 20 40

SCALE IN FEET

TRAFFIC CONTROL AND CONSTRUCTION PHASE I FROM STAT. 113+50 ~ 118+61.38

PROJECT NAME: SEARSBURG - WILMINGTON

PROJECT NUMBER: NHF 010-1(18)

FILE NAME: dd096d01 PLOT DATE: 13-FEB-2002

PROJECT LEADER: DELLA SANTA DRAWN BY: SQUAD B

DESIGNED BY: CHECKED BY:

DESIGN FILE NAME: 78D096/DESIGN/Detbar.DGN: SHEET 261 OF 435

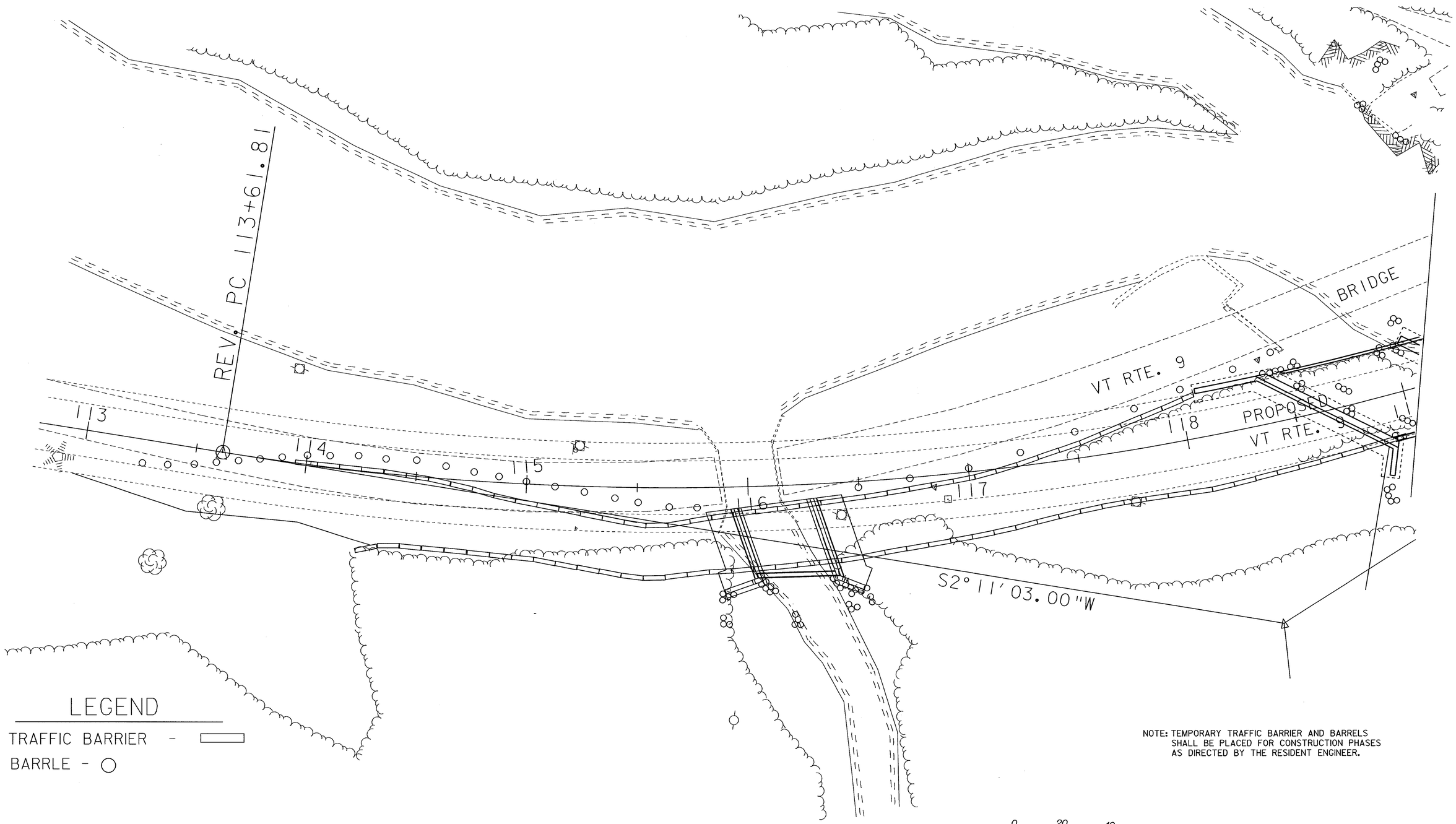

LEGEND

TRAFFIC BARRIER -

BARRLE -

NOTE: TEMPORARY TRAFFIC BARRIER AND BARRELS SHALL BE PLACED FOR CONSTRUCTION PHASES AS DIRECTED BY THE RESIDENT ENGINEER.

0 20 40

SCALE IN FEET

TRAFFIC CONTROL AND CONSTRUCTION PHASE 2 FROM STAT. 113+50 ~ 118+61.38

PROJECT NAME: SEARSBURG - WILMINGTON	
PROJECT NUMBER: NHF 010-1(18)	
FILE NAME: dd096d02	PLOT DATE: 13-FEB-2002
PROJECT LEADER: DELLA SANTA	DRAWN BY: SQUAD B
DESIGNED BY:	CHECKED BY:
DESIGN FILE NAME: 78D096/DESIGN/Oettbor.DGN:	SHEET 262 OF 435

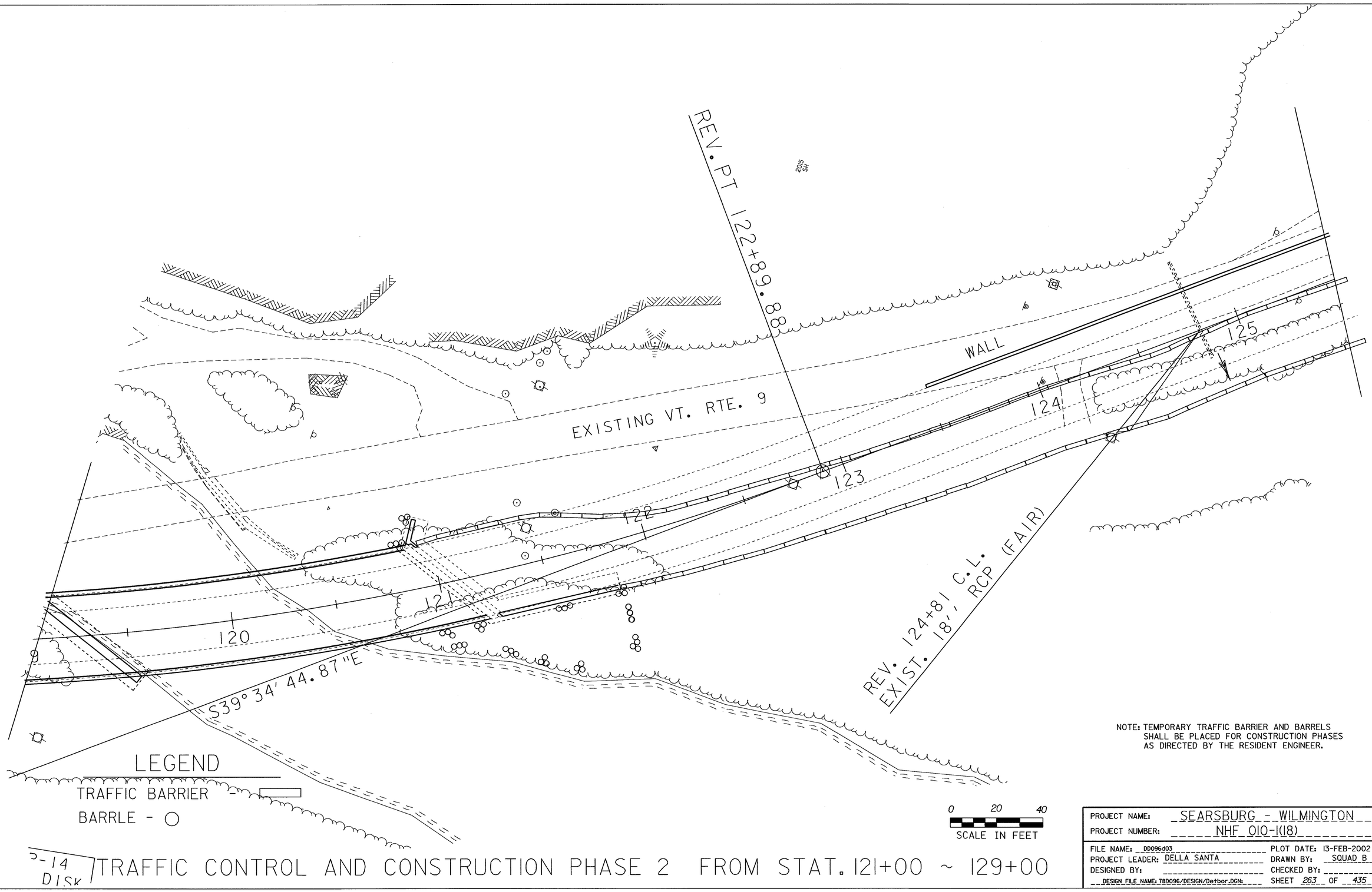

NOTE: TEMPORARY TRAFFIC BARRIER AND BARRELS SHALL BE PLACED FOR CONSTRUCTION PHASES AS DIRECTED BY THE RESIDENT ENGINEER.

5-14 DISK

TRAFFIC CONTROL AND CONSTRUCTION PHASE 2 FROM STAT. 121+00 ~ 129+00

PROJECT NAME:	SEARSBURG - WILMINGTON
PROJECT NUMBER:	NHF 010-1(18)
FILE NAME: DD096d03	PLOT DATE: 13-FEB-2002
PROJECT LEADER: DELLA SANTA	DRAWN BY: SQUAD B
DESIGNED BY:	CHECKED BY:
DESIGN FILE NAME: 78D096/DESIGN/Detbor.DGN	SHEET 263 OF 435

TRAFFIC CONTROL AND CONSTRUCTION PHASE 2 FROM STAT. 121+00 ~ 129+00

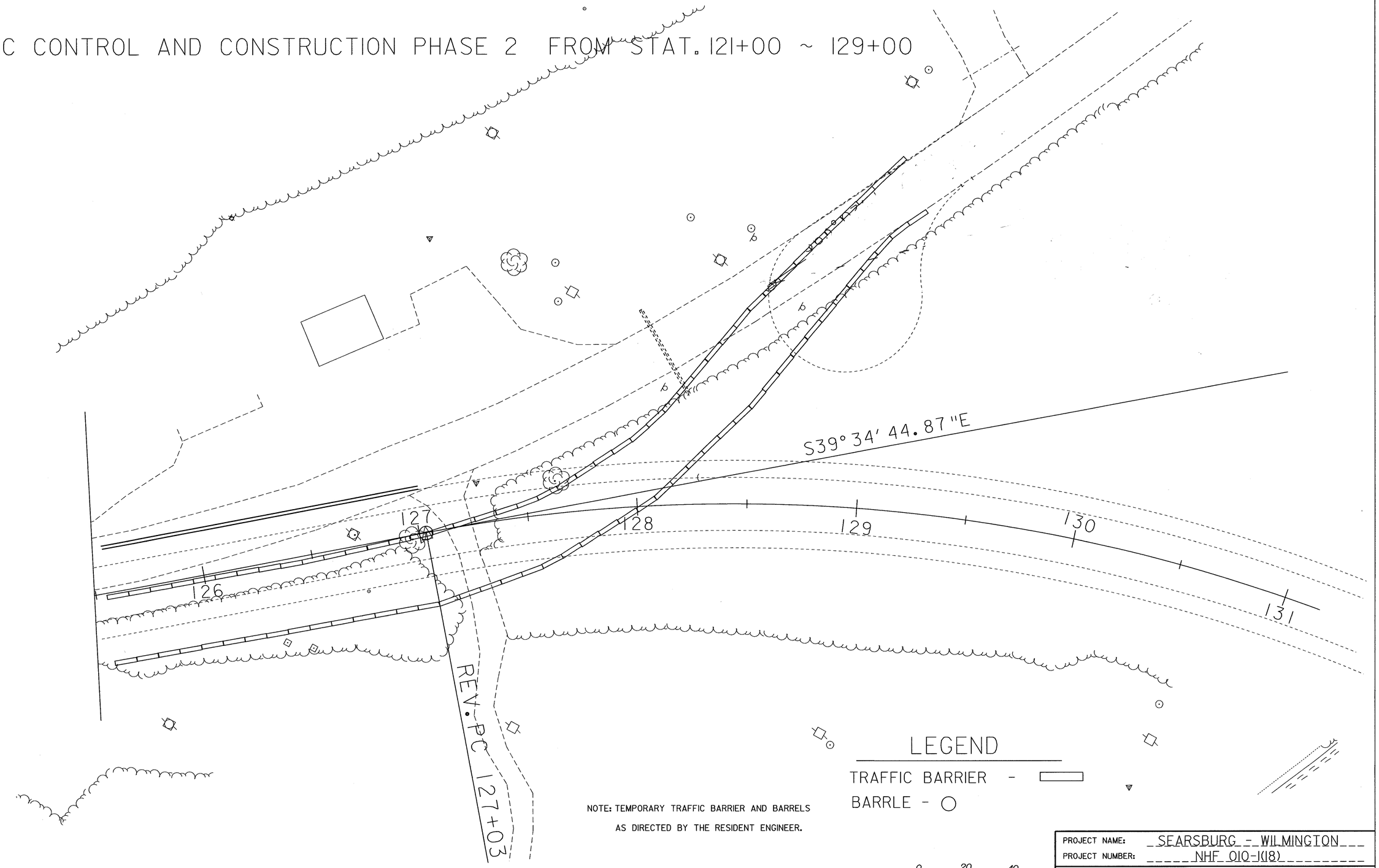

NOTE: TEMPORARY TRAFFIC BARRIER AND BARRELS AS DIRECTED BY THE RESIDENT ENGINEER.

LEGEND

TRAFFIC BARRIER - ▭

BARRLE - ○

0 20 40

SCALE IN FEET

PROJECT NAME: SEARSBURG - WILMINGTON

PROJECT NUMBER: NHF 010-1(18)

FILE NAME: dd096d04 PLOT DATE: 13-FEB-2002

PROJECT LEADER: DELLA SANTA DRAWN BY: SQUAD B

DESIGNED BY: CHECKED BY:

DESIGN FILE NAME: 78D096/DESIGN/Detbar.DGN SHEET 264 OF 435

TRAFFIC CONTROL AND CONSTRUCTION PHASES FROM STA. 113+50 ~ 118+61.38

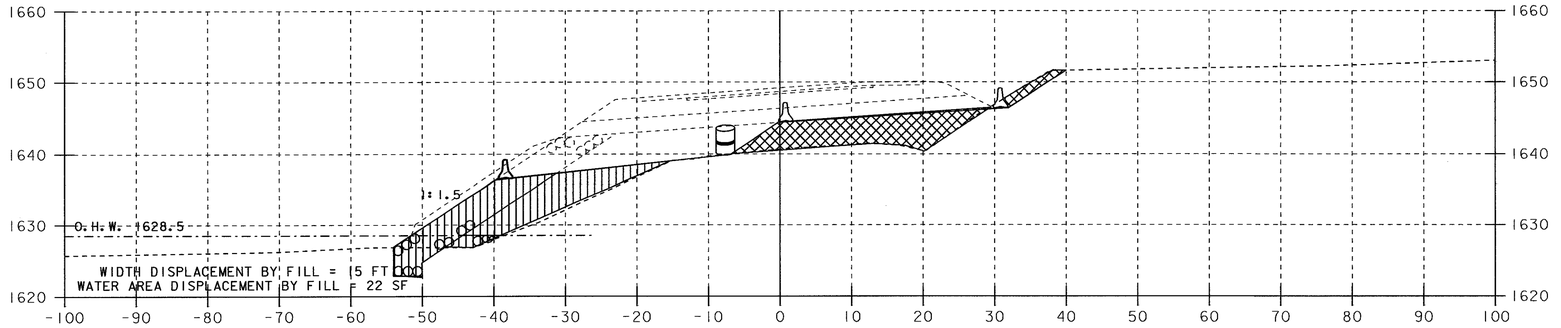

114+50

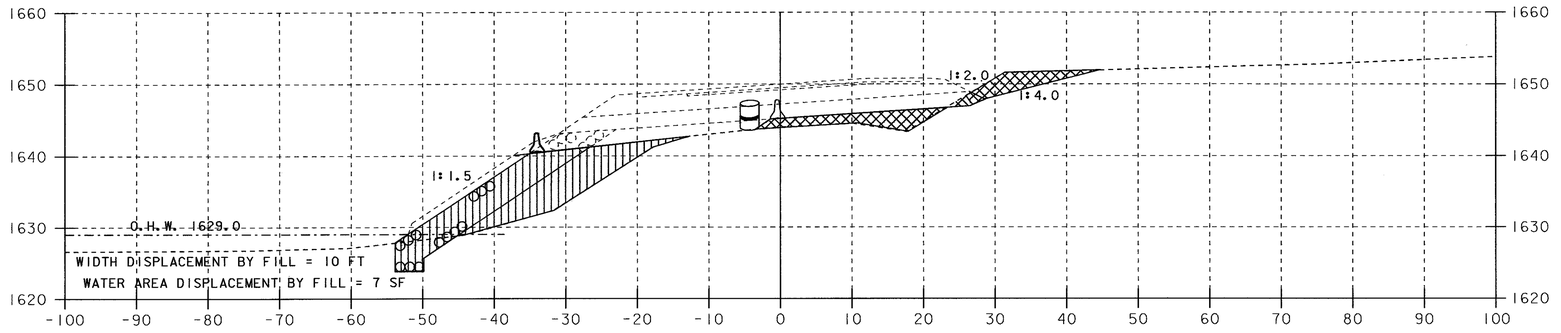

114+00

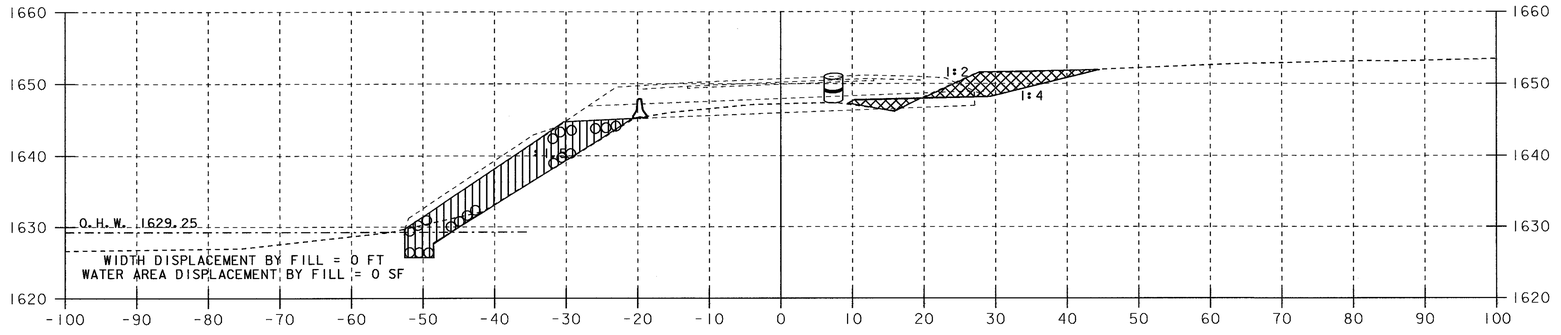

113+50

NOTE: TEMPORARY TRAFFIC BARRIER AND BARRELS SHALL BE PLACED FOR CONSTRUCTION PHASES AS DIRECTED BY THE RESIDENT ENGINEER.

PHASE 1

PHASE 2

0 10 20

SCALE IN FEET

PROJECT NAME: SEARSBURG - WILMINGTON

PROJECT NUMBER: NHF 010-1(18)

PLOT FILE NAME: dd096d05 PLOT DATE: 13-FEB-2002

PROJECT LEADER: DELLA SANTA DRAWN BY: SQUAD B

DESIGN FILE NAME: 78D096/DESIGN/Detour.DGN:

TRAFFIC CONTROL AND CONSTRUCTION PHASES FROM STA. 113+50 ~ 118+61.38

REV. 116+23.79
END BRIDGE 24 RESUME ROADWAY

REV. 115+86.91
STOP ROADWAY BEGIN BRIDGE 24

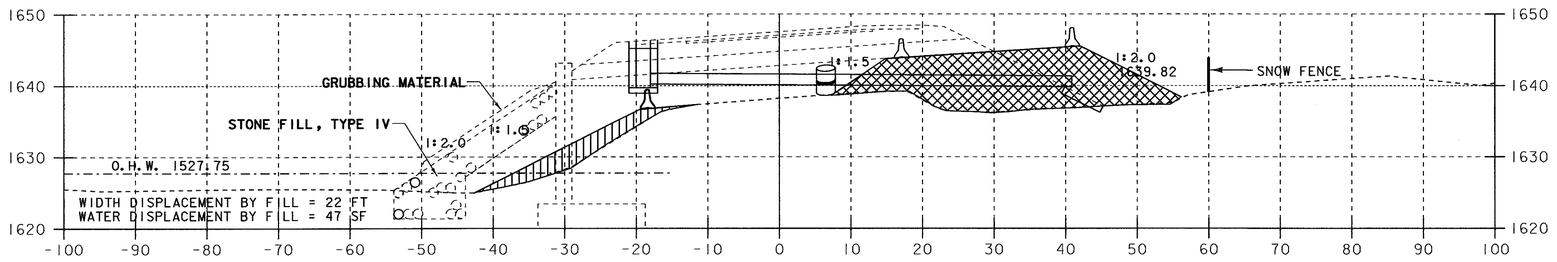

115+50

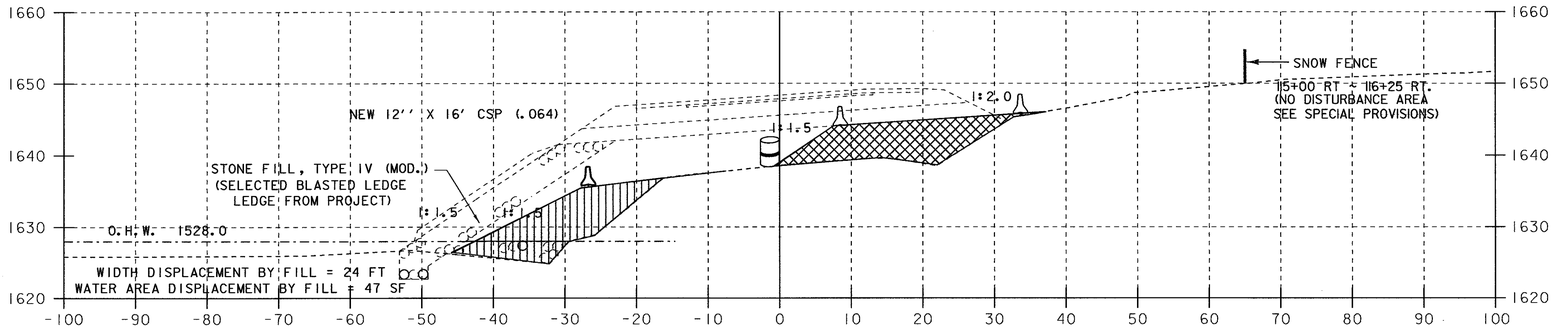

115+00

PHASE 1

PHASE 2

0 10 20
SCALE IN FEET

PROJECT NAME:	SEARSBURG - WILMINGTON
PROJECT NUMBER:	NHF 010-1(18)
PLOT FILE NAME: dd096d06	PLOT DATE: 13-FEB-2002
PROJECT LEADER: DELLA SANTA	DRAWN BY: SQUAD B
DESIGN FILE NAME: 78D096/DESIGN/Detour.DGN:	
	SHEET 266 OF 435

TRAFFIC CONTROL AND CONSTRUCTION PHASES FROM STA. 113+50 ~ 118+61.38

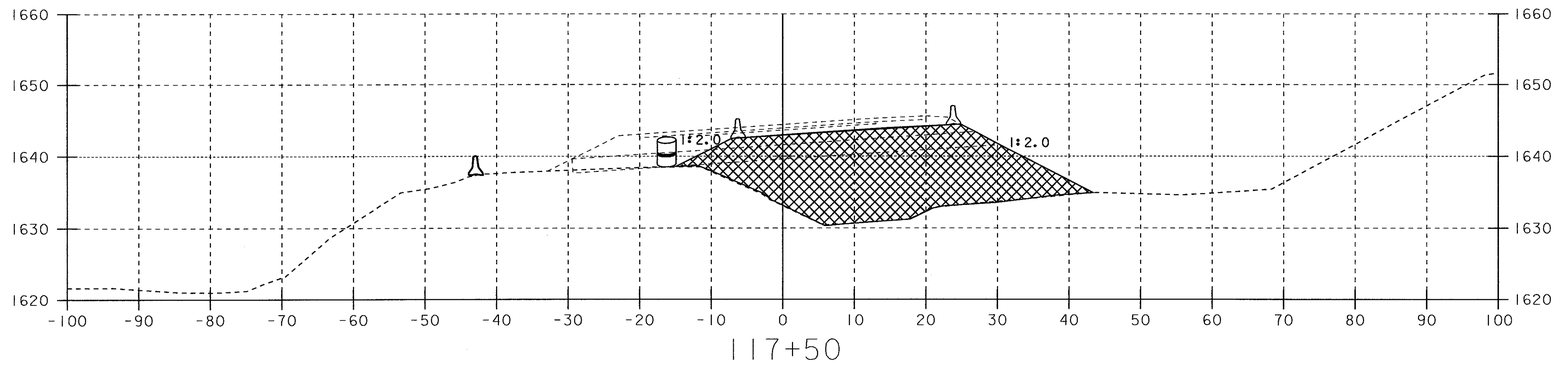

117+50

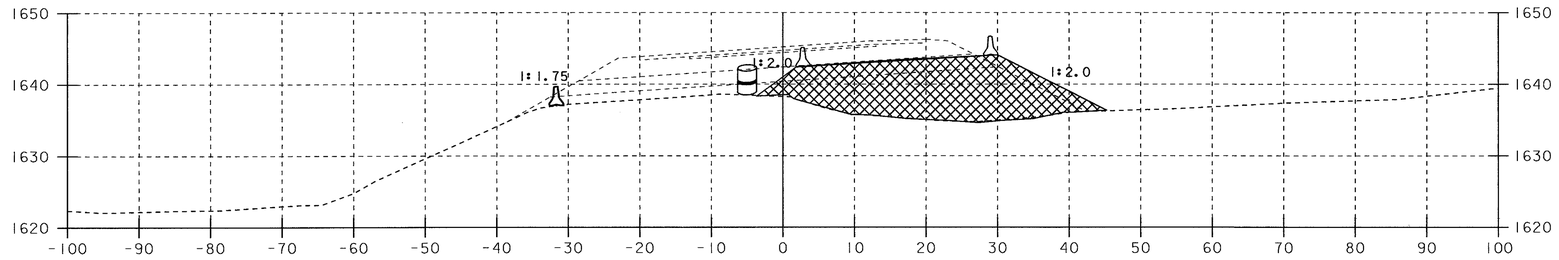

117+00

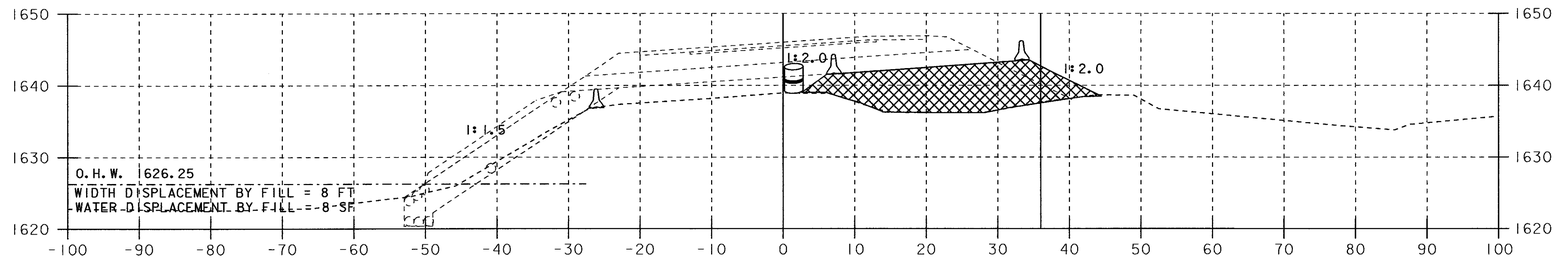

116+50

PHASE 1

PHASE 2

0 10 20
SCALE IN FEET

PROJECT NAME:	SEARSBURG - WILMINGTON
PROJECT NUMBER:	NHF 010-1(18)
PLOT FILE NAME: dd096d07	PLOT DATE: 13-FEB-2002
PROJECT LEADER: DELLA SANTA	DRAWN BY: SQUAD B
DESIGN FILE NAME: 78D096/DESIGN/Detour.DGN:	
	SHEET 267 OF 435

TRAFFIC CONTROL AND CONSTRUCTION PHASES FROM STA. 113+50 ~ 118+61.38

REV. 118+61.38
STOP ROADWAY BEGIN BRIDGE 25

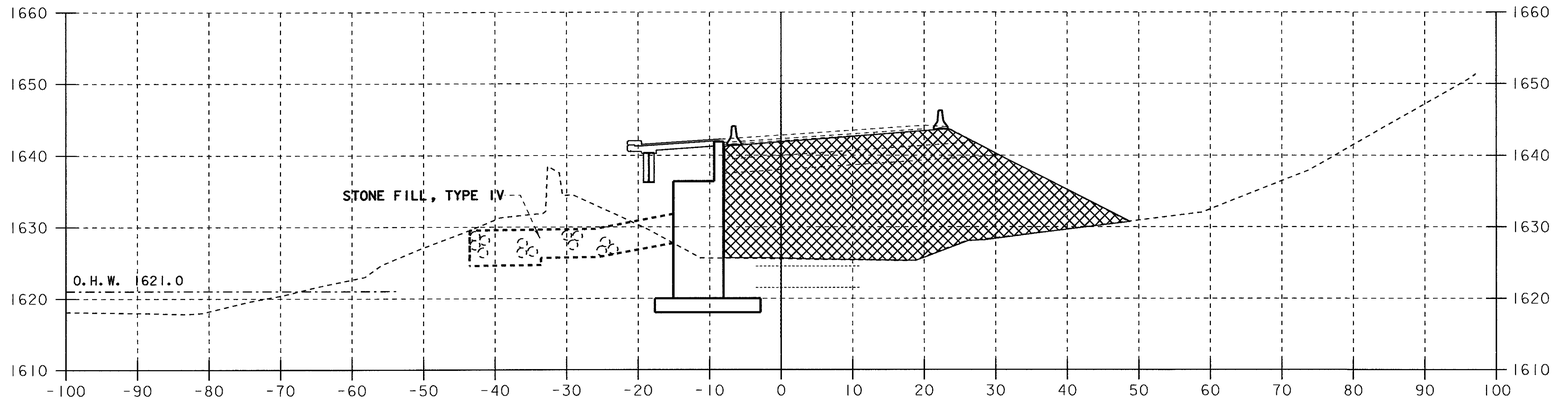

118+50

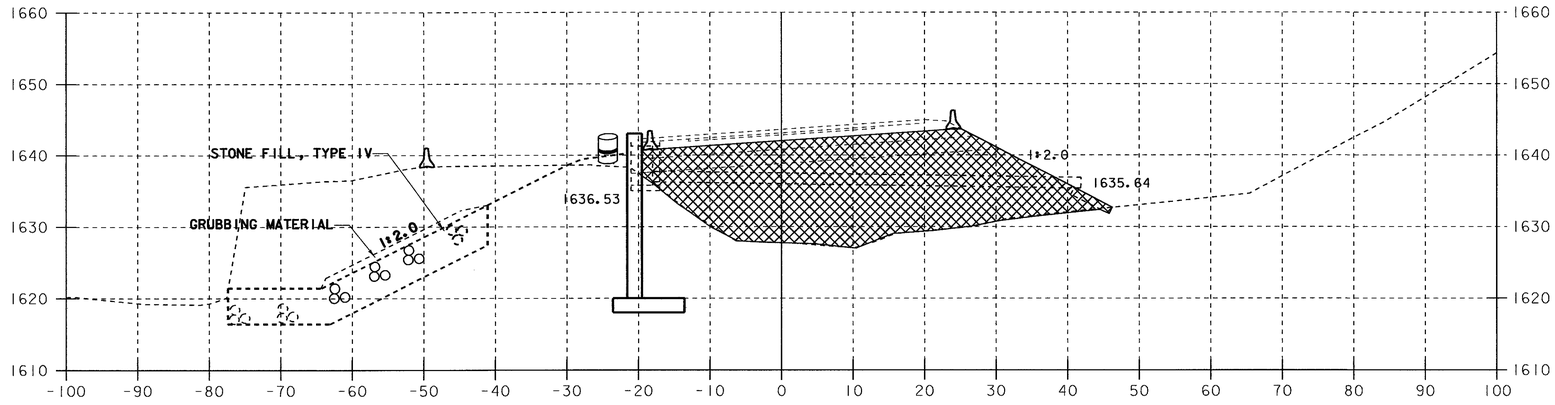

118+00

PHASE 1

PHASE 2

0 10 20
SCALE IN FEET

PROJECT NAME:	SEARSBURG - WILMINGTON
PROJECT NUMBER:	NHF 010-1(18)
PLOT FILE NAME: dd096d08	PLOT DATE: 13-FEB-2002
PROJECT LEADER: DELLA SANTA	DRAWN BY: SQUAD B
DESIGN FILE NAME: 78D096/DESIGN/Detour.DGN:	
	SHEET 268 OF 435

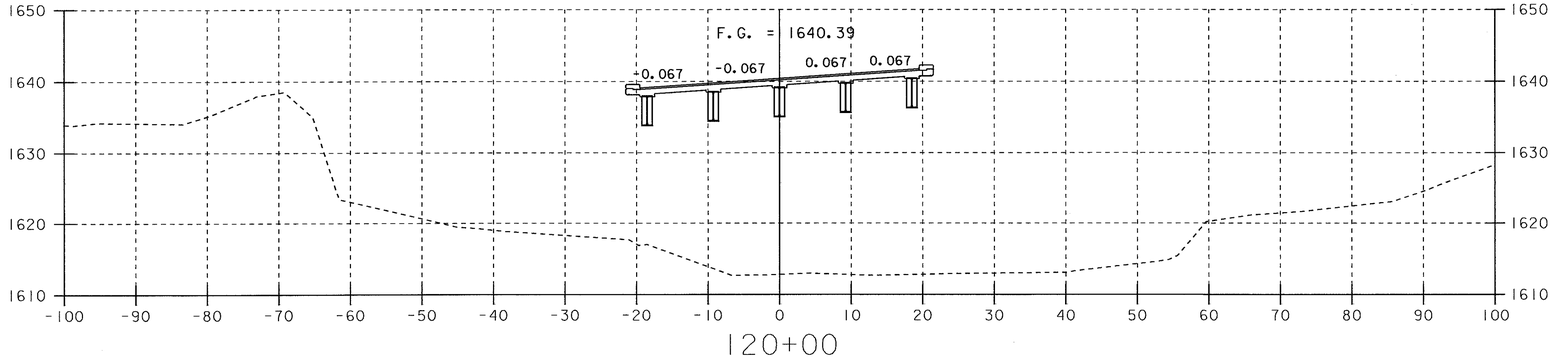

120+00

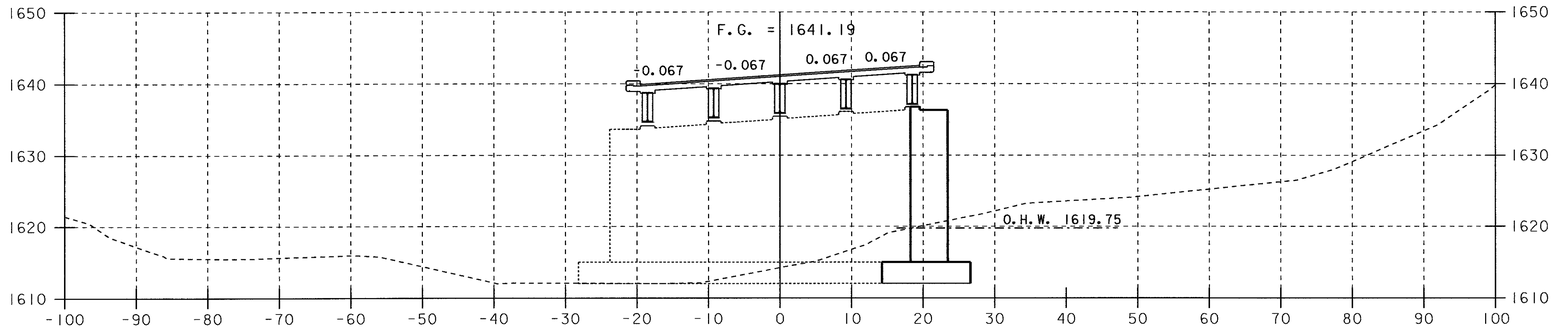

119+50

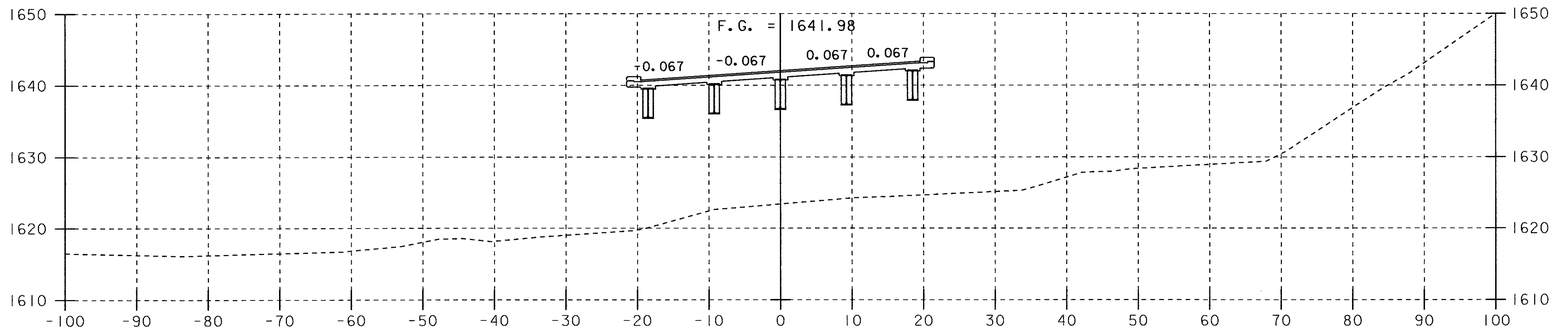

119+00

NOTE:
DASHED LINE INDICATES SUBSTRUCTURE UPSTATION AND/OR DOWNSTATION OF SECTION CUT LINE.

0 10 20
SCALE IN FEET

PROJECT NAME:	SEARSBURG - WILMINGTON
PROJECT NUMBER:	NHF 010-1(18)
PLOT FILE NAME: dd096d09	PLOT DATE: 13-FEB-2002
PROJECT LEADER: DELLA SANTA	DRAWN BY: SQUAD B
DESIGN FILE NAME: 78D096/DESIGN/Detour.DGN:	
	SHEET 269 OF 435

TRAFFIC CONTROL AND CONSTRUCTION PHASES FROM REV STA 121+08.47 ~ 129+00

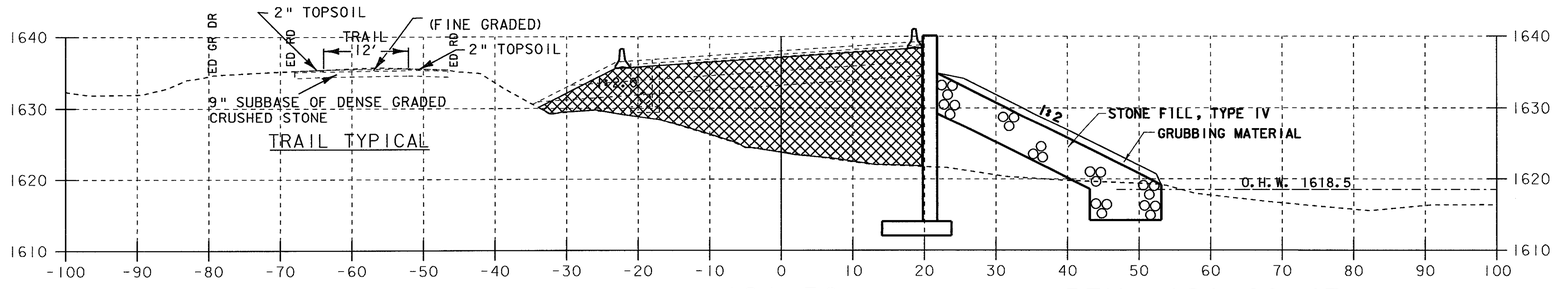

121+50

F.G. = 1638.79

REV. 121+08.47

END BRIDGE 25 RESUME ROADWAY

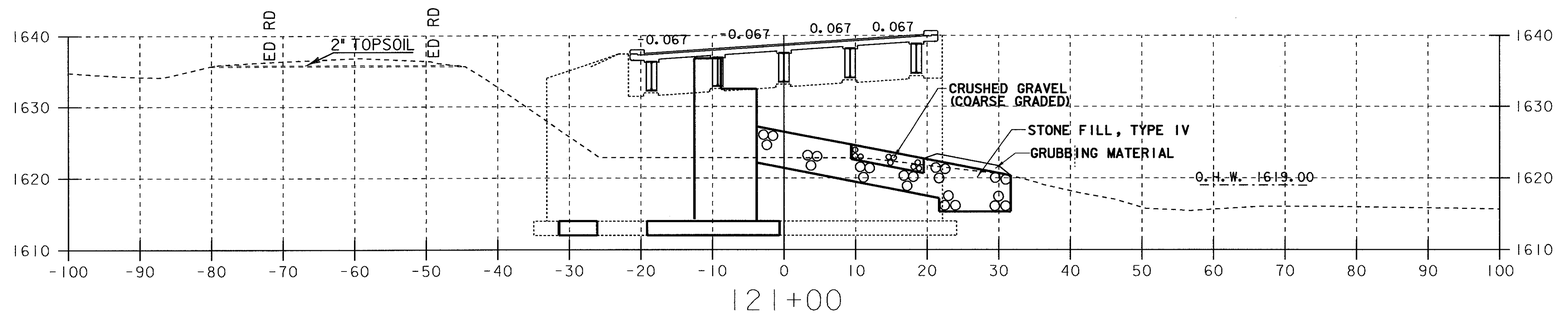

121+00

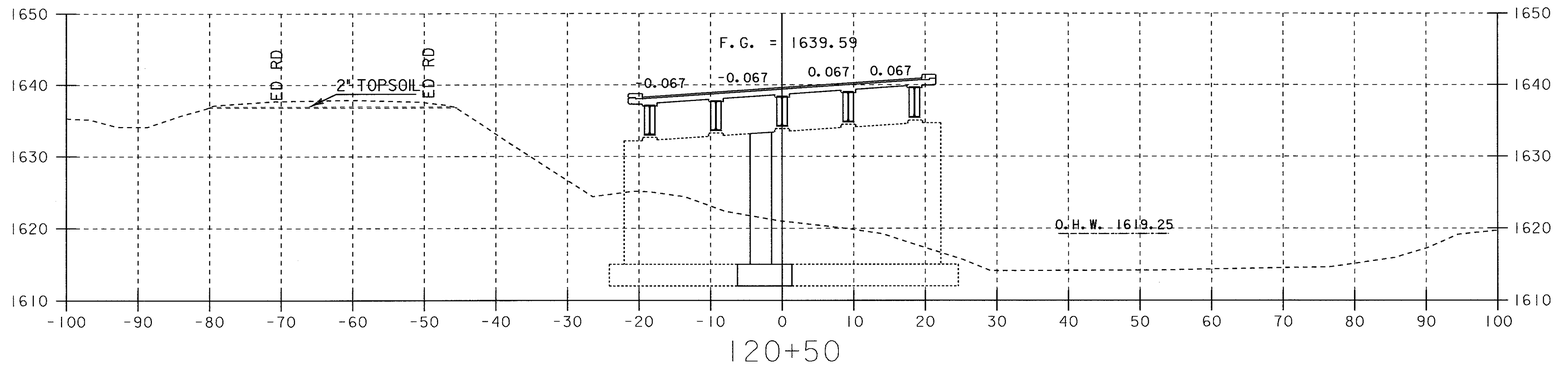

120+50

PHASE 2

PHASE 3

PHASE 4

0 10 20

SCALE IN FEET

PROJECT NAME:	SEARSBURG - WILMINGTON
PROJECT NUMBER:	NHF 010-1(18)
PLOT FILE NAME: dd096d10	PLOT DATE: 13-FEB-2002
PROJECT LEADER: DELLA SANTA	DRAWN BY: SQUAD B
DESIGN FILE NAME: 78D096/DESIGN/Detour.DGN:	
	SHEET 270 OF 435

TRAFFIC CONTROL AND CONSTRUCTION PHASES FROM REV STA 121+08.47 ~ 129+00

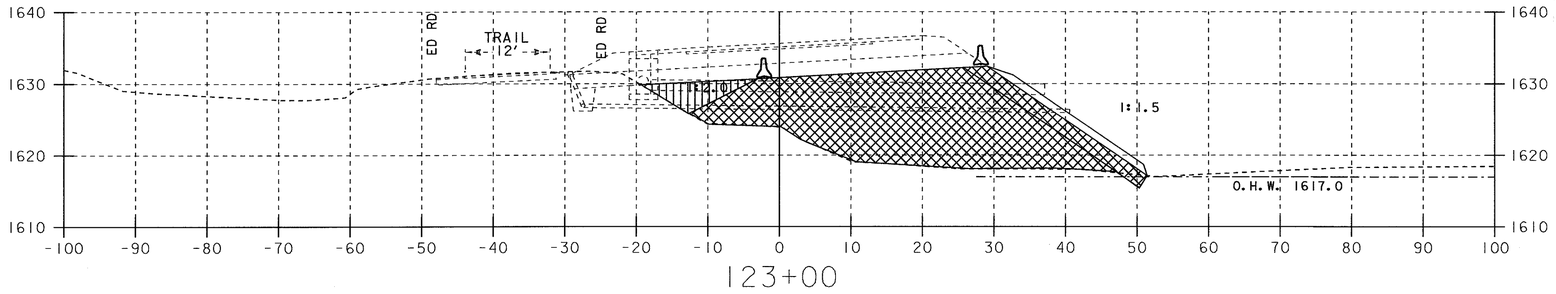

123+00

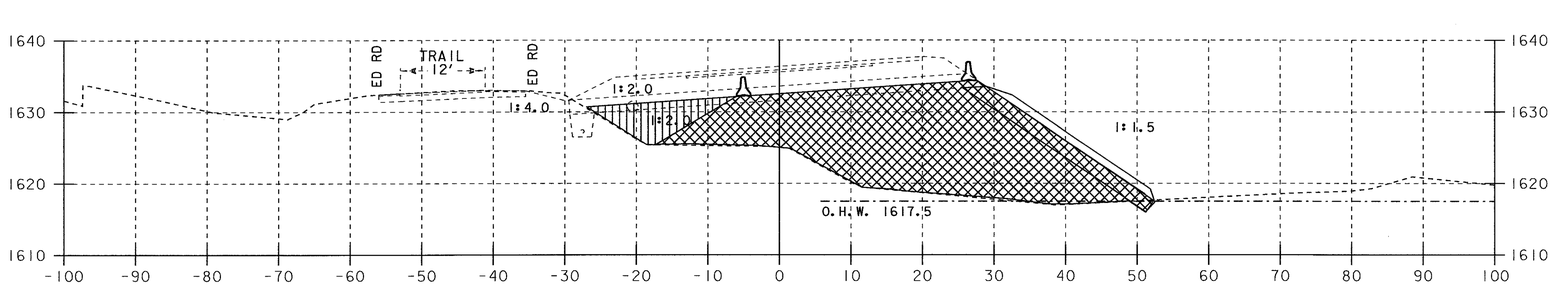

122+50

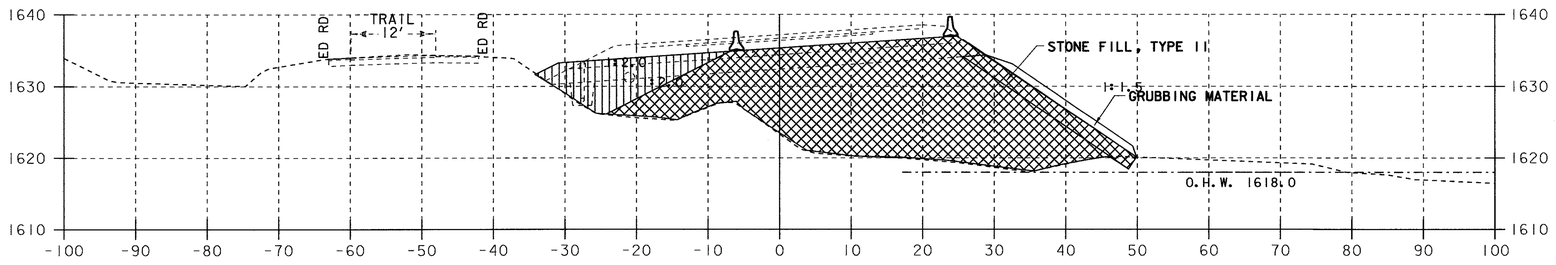

122+00

PHASE 2

PHASE 3

PHASE 4

0 10 20
SCALE IN FEET

PROJECT NAME:	SEARSBURG - WILMINGTON
PROJECT NUMBER:	NHF 010-1(18)
PLOT FILE NAME: dd096d11	PLOT DATE: 13-FEB-2002
PROJECT LEADER: DELLA SANTA	DRAWN BY: SQUAD B
DESIGN FILE NAME: 78D096/DESIGN/Detour.DGN:	
	SHEET 271 OF 435

TRAFFIC CONTROL AND CONSTRUCTION PHASES FROM REV STA 121+08.47 ~ 129+00

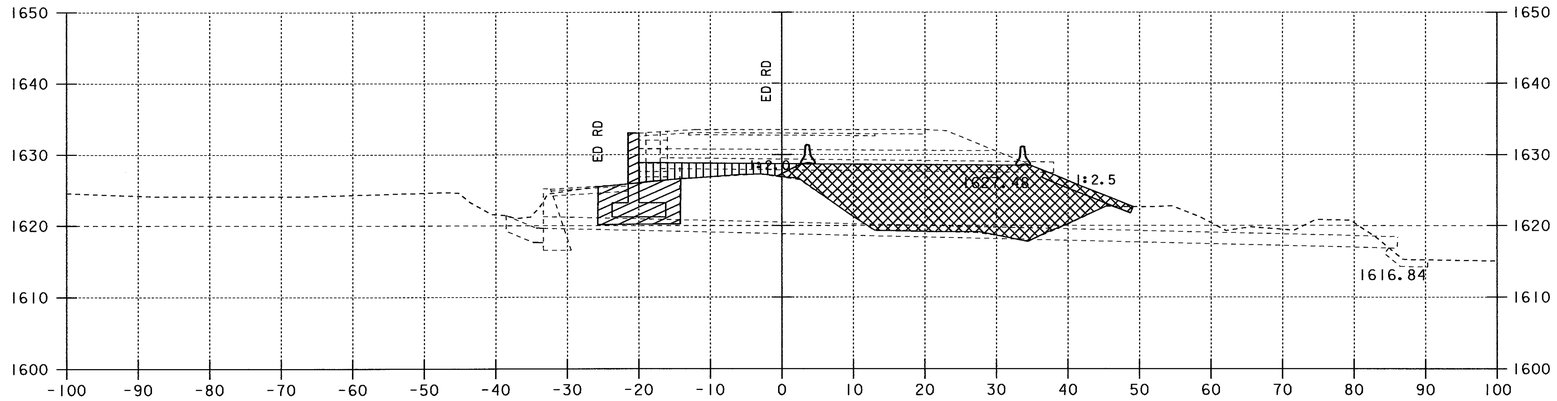

124+81

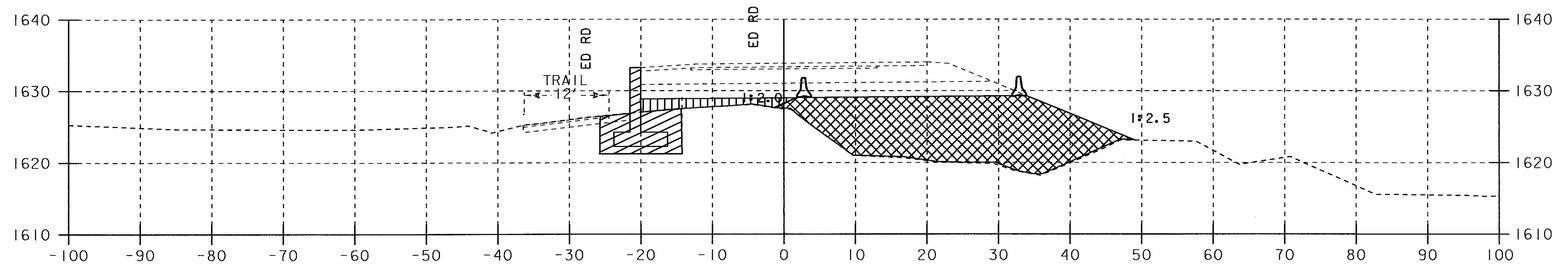

124+50

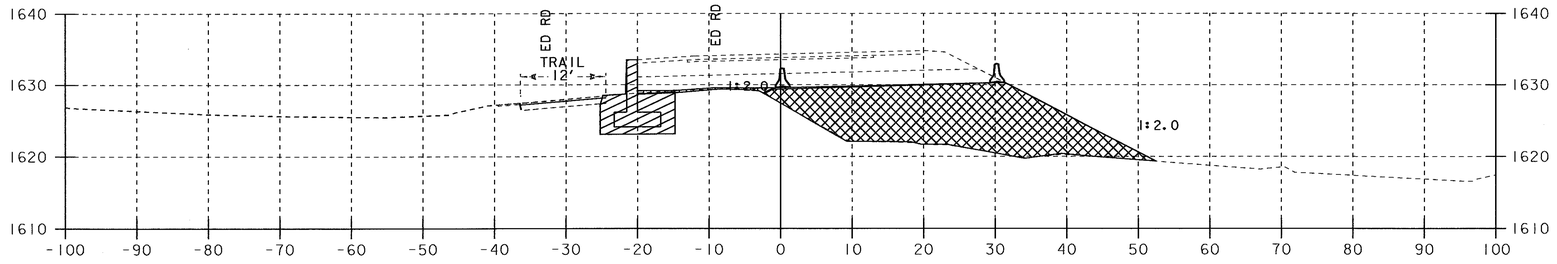

124+00

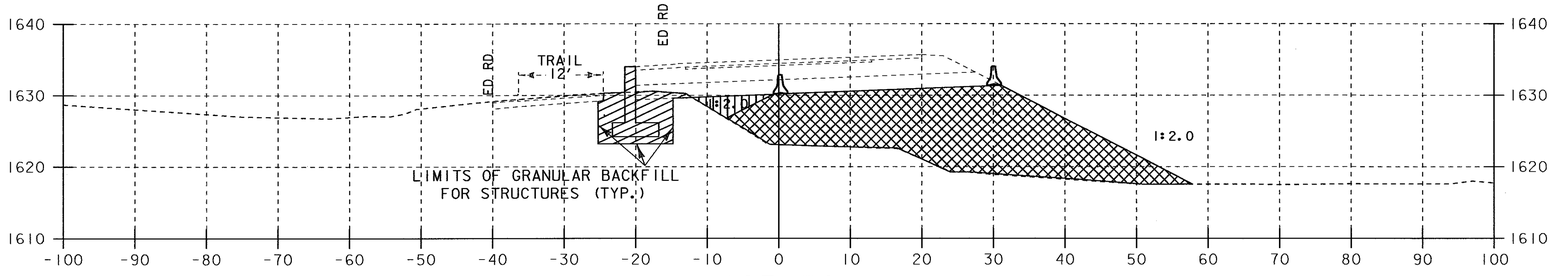

123+50

PHASE 2

PHASE 3

PHASE 4

0 10 20
SCALE IN FEET

PROJECT NAME:	SEARSBURG - WILMINGTON
PROJECT NUMBER:	NHF 010-1(18)
PLOT FILE NAME: dd096d12	PLOT DATE: 13-FEB-2002
PROJECT LEADER: DELLA SANTA	DRAWN BY: SQUAD B
DESIGN FILE NAME: 78D096/DESIGN/Detour.DGN:	
	SHEET 272 OF 435

TRAFFIC CONTROL AND CONSTRUCTION PHASES FROM REV STA 121+08.47 ~ 129+00

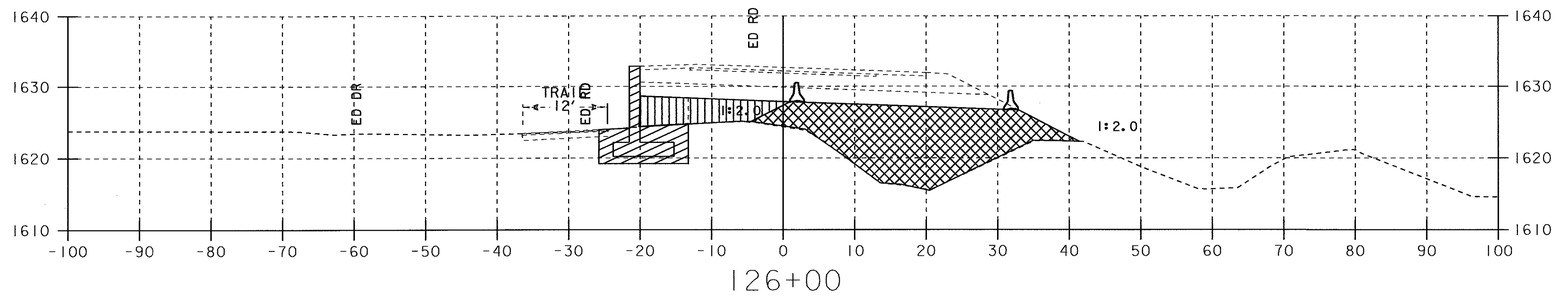

126+00

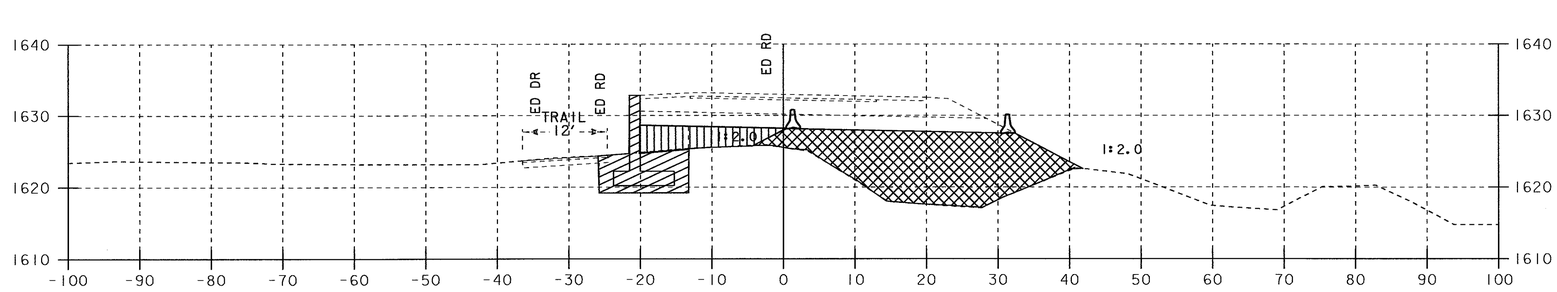

125+50

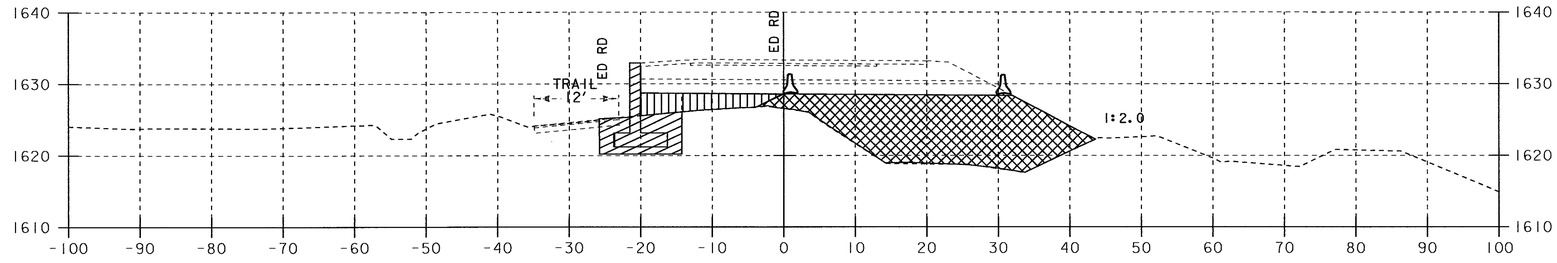

125+00

PHASE 2

PHASE 3

PHASE 4

0 10 20
SCALE IN FEET

PROJECT NAME:	SEARSBURG - WILMINGTON
PROJECT NUMBER:	NHF 010-1(18)
PLOT FILE NAME: dd096d13	PLOT DATE: 13-FEB-2002
PROJECT LEADER: DELLA SANTA	DRAWN BY: SQUAD B
DESIGN FILE NAME: 78D096/DESIGN/Detour.DGN:	
	SHEET 273 OF 435

TRAFFIC CONTROL AND CONSTRUCTION PHASES FROM REV STA 121+08.47 ~ 129+00

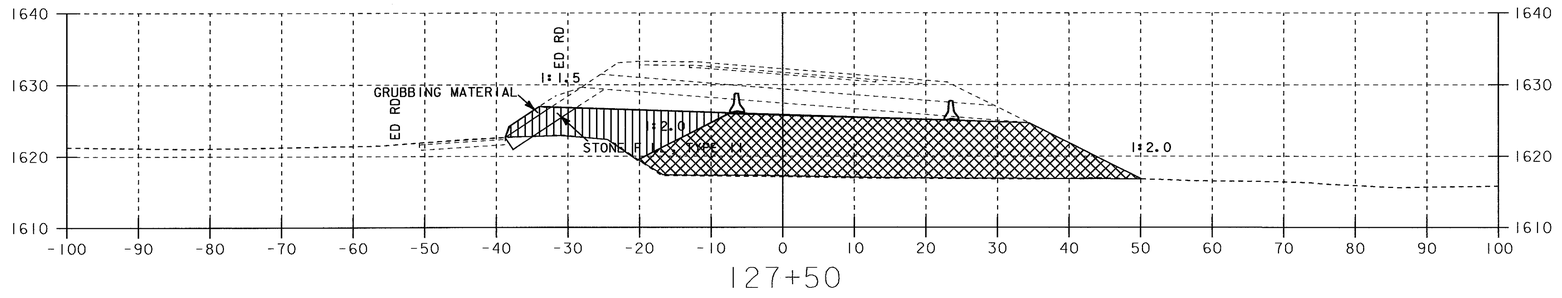

127+50

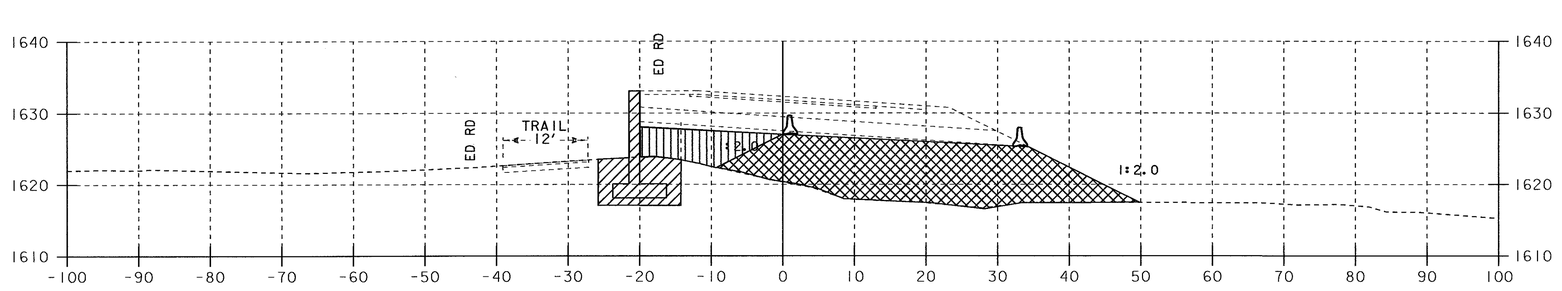

127+00

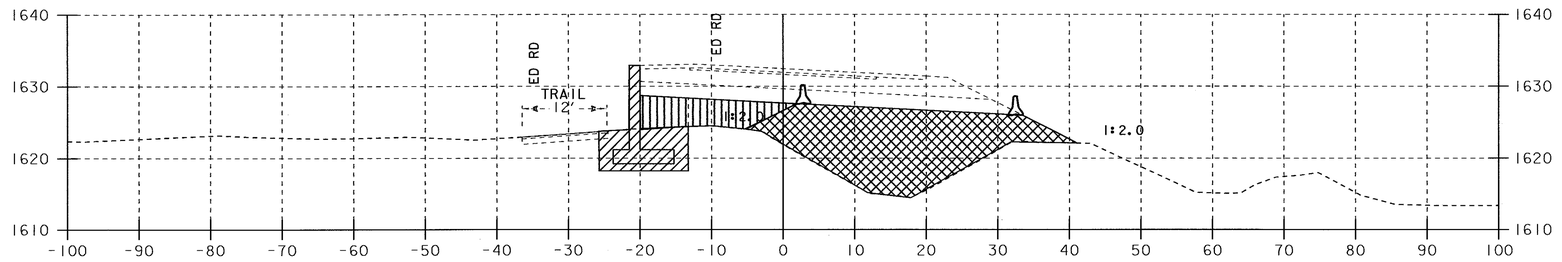

126+50

PHASE 2

PHASE 3

PHASE 4

0 10 20

SCALE IN FEET

PROJECT NAME:	SEARSBURG - WILMINGTON
PROJECT NUMBER:	NHF 010-1(18)
PLOT FILE NAME: dd096dl4	PLOT DATE: 13-FEB-2002
PROJECT LEADER: DELLA SANTA	DRAWN BY: SQUAD B
DESIGN FILE NAME: 78D096/DESIGN/Detour.DGN:	
	SHEET 274 OF 435

TRAFFIC CONTROL AND CONSTRUCTION PHASES FROM REV STA 121+08.47 ~ 129+00

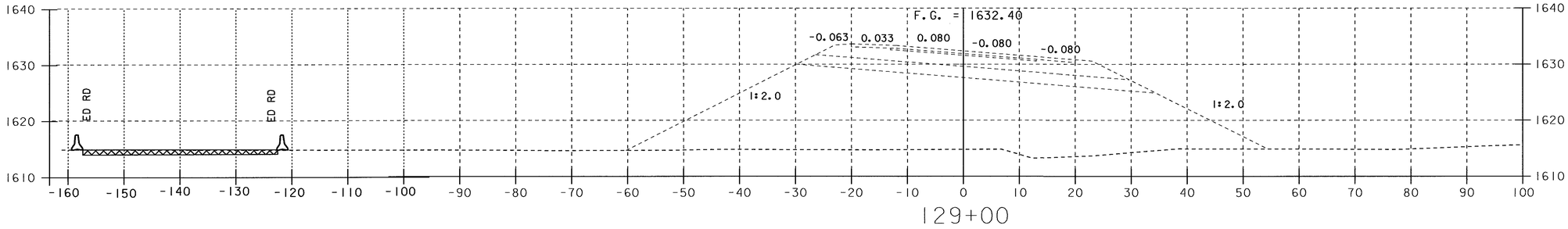

129+00

128+50

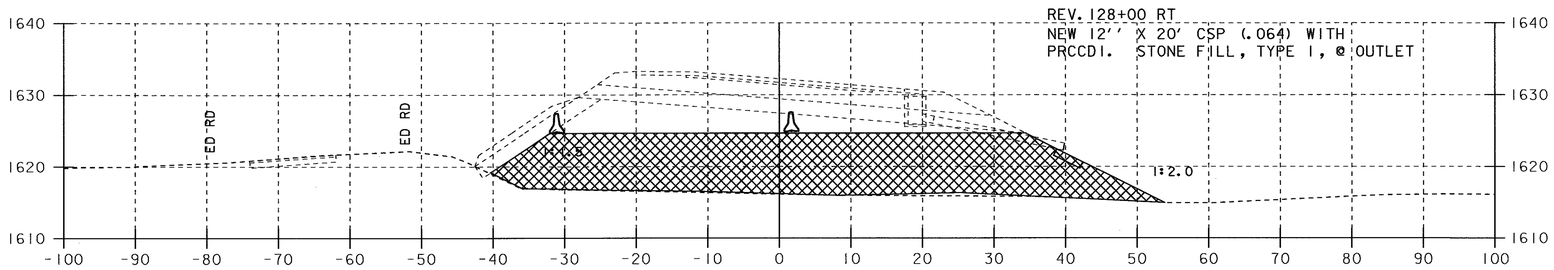

128+00

PHASE 2

PHASE 3

PHASE 4

0 10 20

SCALE IN FEET

PROJECT NAME:	SEARSBURG - WILMINGTON
PROJECT NUMBER:	NHF 010-1(18)
PLOT FILE NAME: dd096dl5	PLOT DATE: 13-FEB-2002
PROJECT LEADER: DELLA SANTA	DRAWN BY: SQUAD B
DESIGN FILE NAME: 78D096/DESIGN/Detour.DGN:	
	SHEET 275 OF 435

DETOUR TRAFFIC CONTROL PLAN

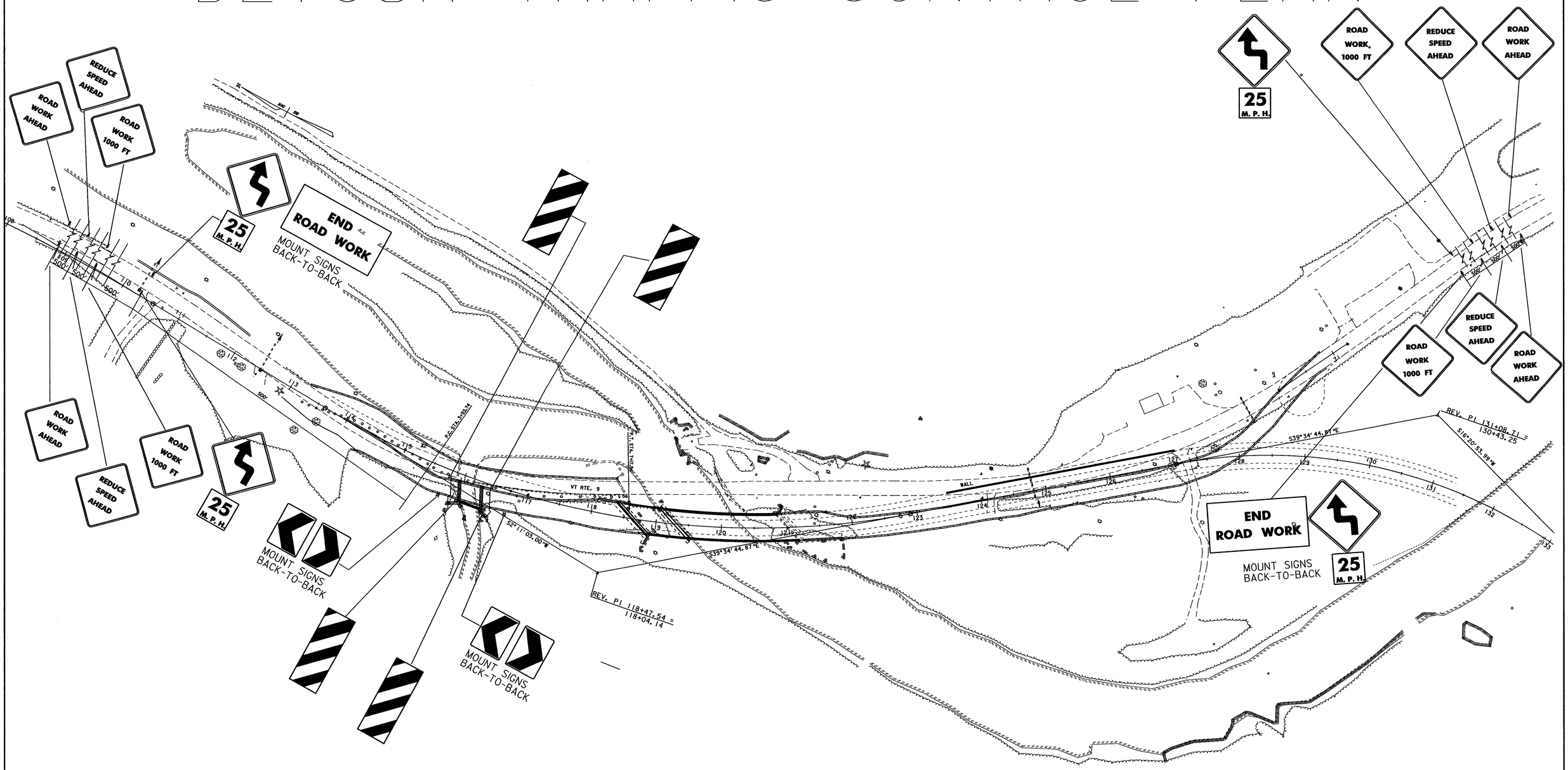

PROJECT NAME:	SEARSBURG - WILMINGTON
PROJECT NUMBER:	NHF 010-1(18)
FILE NAME: dd096dss.I	PLOT DATE: 14-FEB-2002
PROJECT LEADER: DELLA SANTA	DRAWN BY: SQUAD B
DESIGNED BY:	CHECKED BY:
DESIGN FILE NAME: 78D096/DESIGN/Detbor.DGN	SHEET 276 OF 435

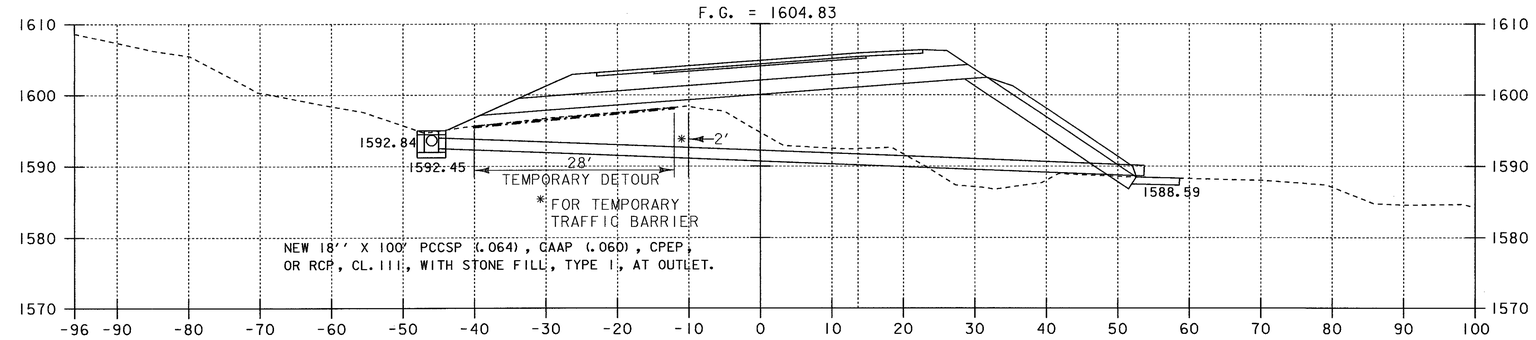

145+77, SKEWED 60°-40'-55'' LT.

145+50 - 152+50
CONSTRUCT TEMPORARY DETOUR
(TO INSTALL GABION WALLS)
SCARIFY EXISTING PAVEMENT & OVERLAY
WITH 2'' BITUMINOUS CONCRETE PAVEMENT

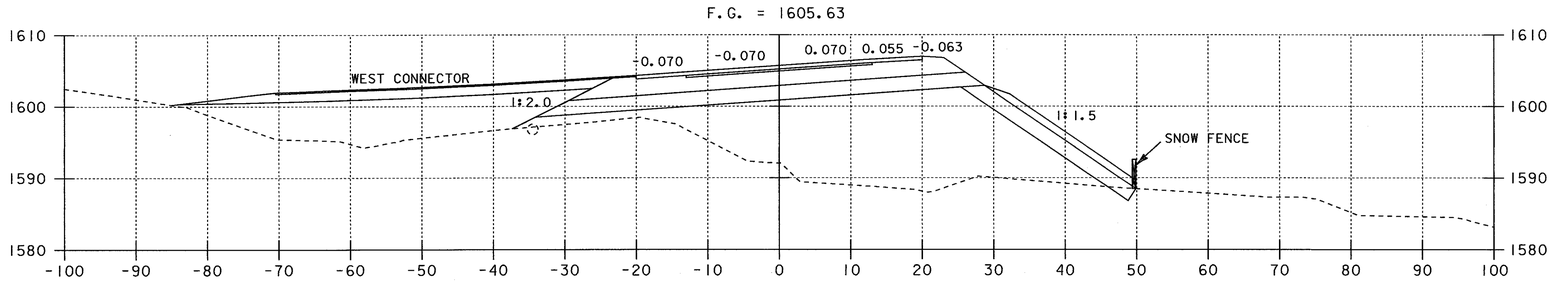

145+50

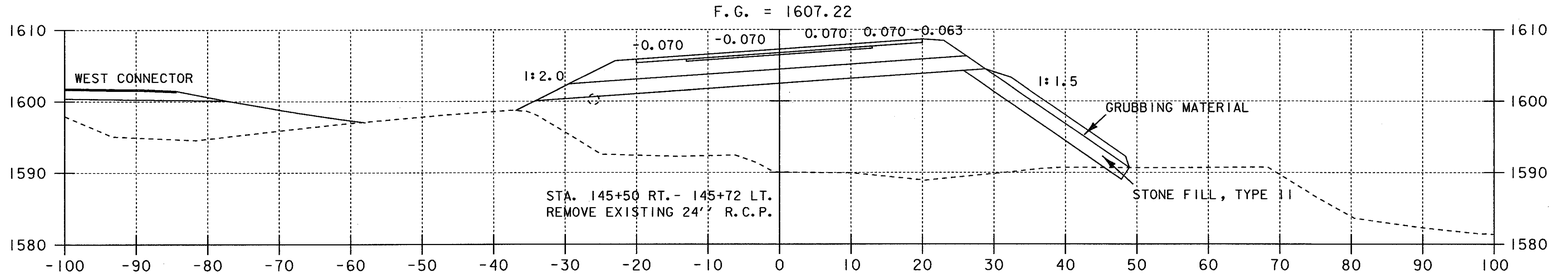

145+00

144+50.34
END BRIDGE 25B RESUME ROADWAY

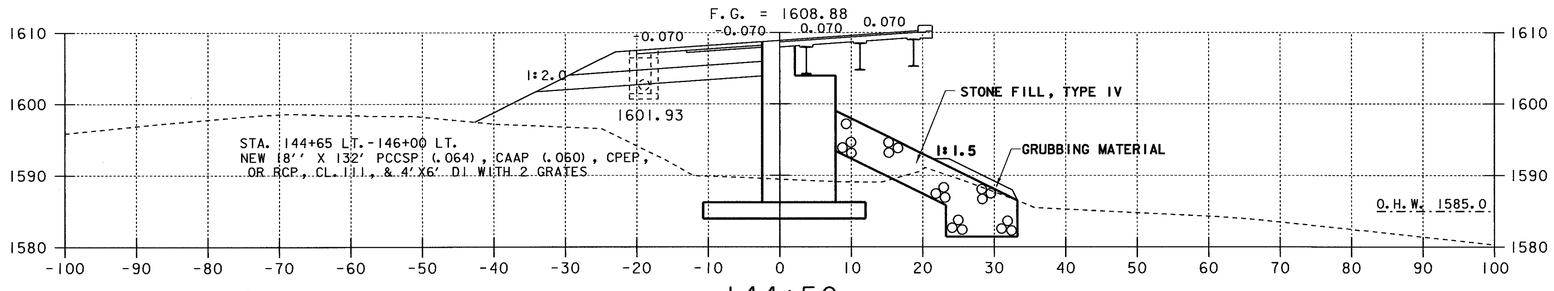

144+50

TEMPORARY DETOUR FOR GABION WALLS

0 10 20
SCALE IN FEET

PROJECT NAME:	SEARSBURG - WILMINGTON
PROJECT NUMBER:	NHF 010-1(18)
PLOT FILE NAME: DD096X24	PLOT DATE: 21-FEB-2002
PROJECT LEADER: DELLA SANTA	DRAWN BY: SQUAD B
DESIGN FILE NAME: 78D096/DESIGN/DD096CWRK.DGN:	
	SHEET 278 OF 435

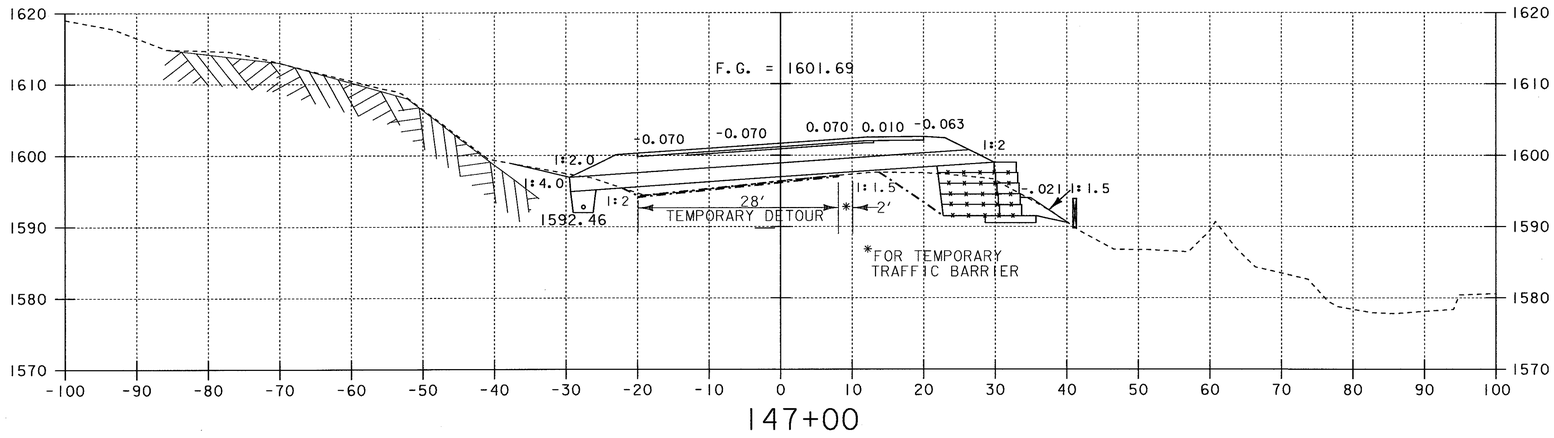

147+00

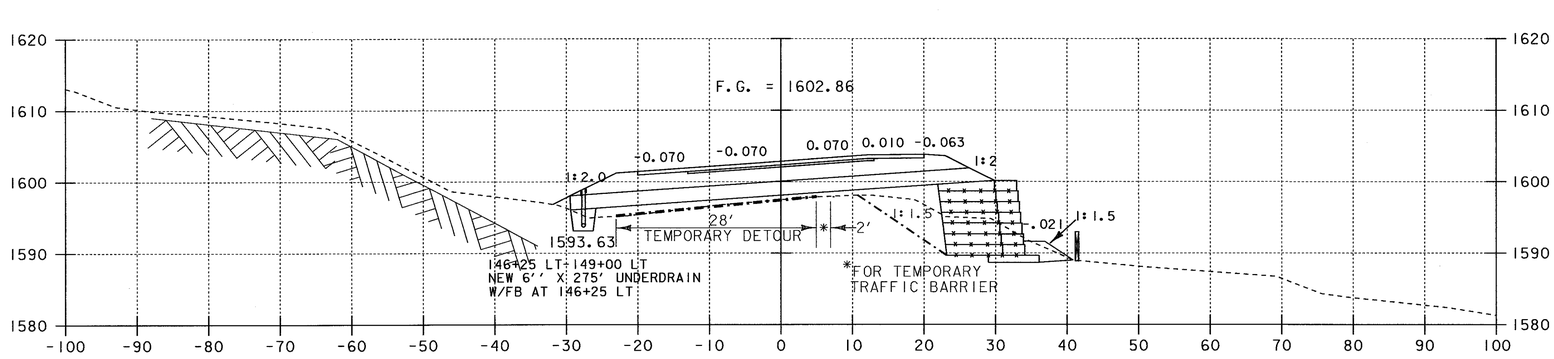

146+50

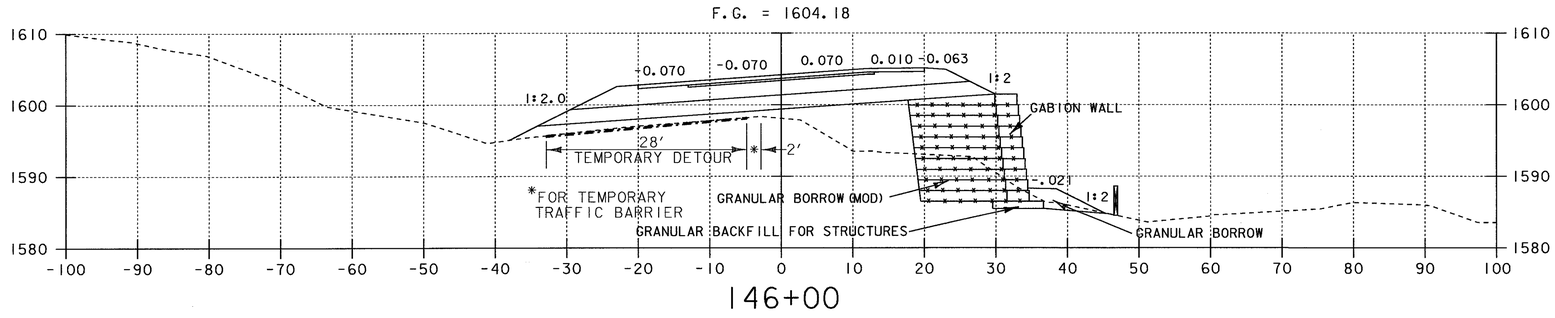

146+00

STA. 145+68 RT ~ 147+28 RT
CONSTRUCT GABION WALL

0 10 20
SCALE IN FEET

TEMPORARY DETOUR FOR GABION WALLS

PROJECT NAME:	SEARSBURG - WILMINGTON
PROJECT NUMBER:	NHF 010-1(18)
PLOT FILE NAME: DD096X25	PLOT DATE: 13-NOV-2001
PROJECT LEADER: DELLA SANTA	DRAWN BY: SQUAD B
DESIGN FILE NAME: 78D096/DESIGN/DD096CWRK.DGN:	
	SHEET 279 OF 435

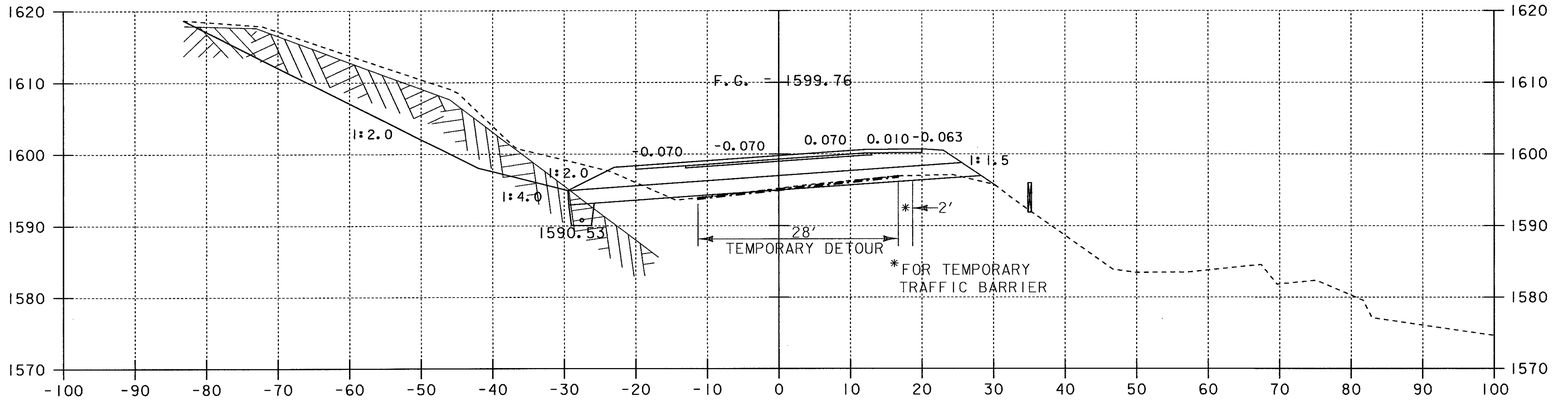

148+00

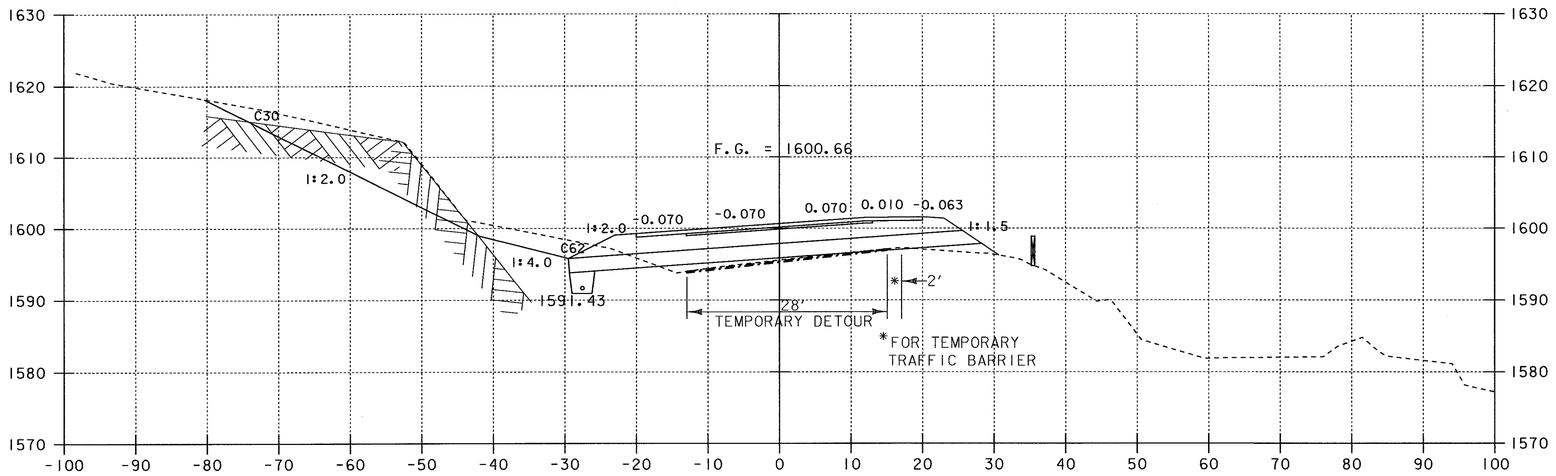

147+50

0 10 20
SCALE IN FEET

TEMPORARY DETOUR FOR GABION WALLS

PROJECT NAME:	SEARSBURG - WILMINGTON
PROJECT NUMBER:	NHF 010-1(18)
PLOT FILE NAME: DD096X26	PLOT DATE: 13-NOV-2001
PROJECT LEADER: DELLA SANTA	DRAWN BY: SQUAD B
DESIGN FILE NAME: 78D096/DESIGN/DD096CWRK.DGN:	
	SHEET 280 OF 435

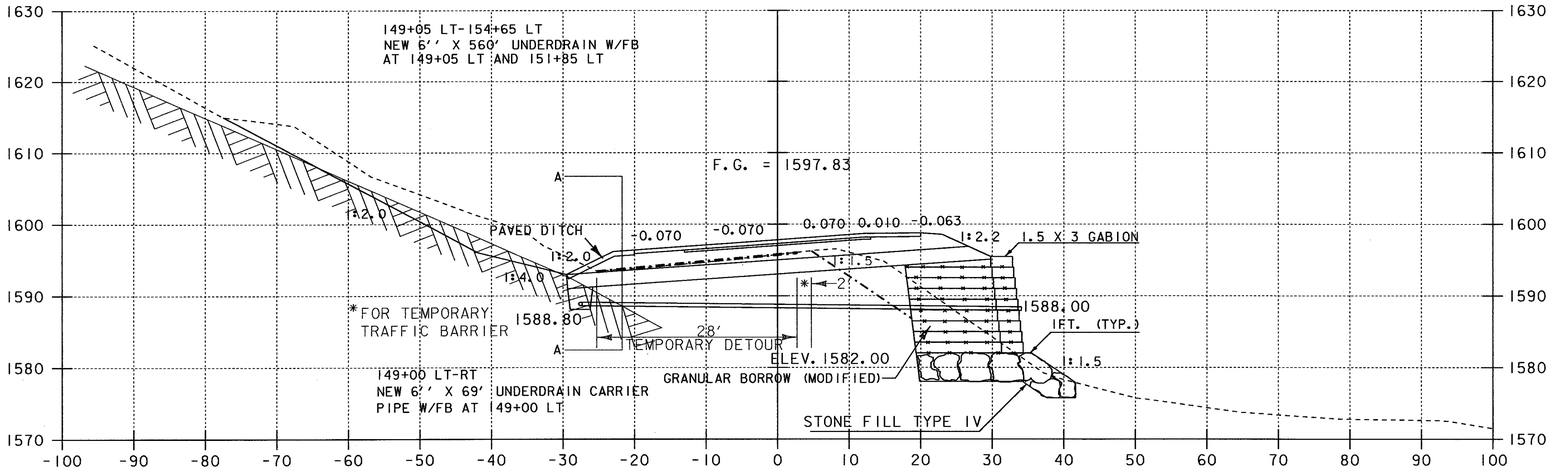

149+00

STA. 148+75 RT~ 152+25 RT
CONSTRUCT GABION WALL

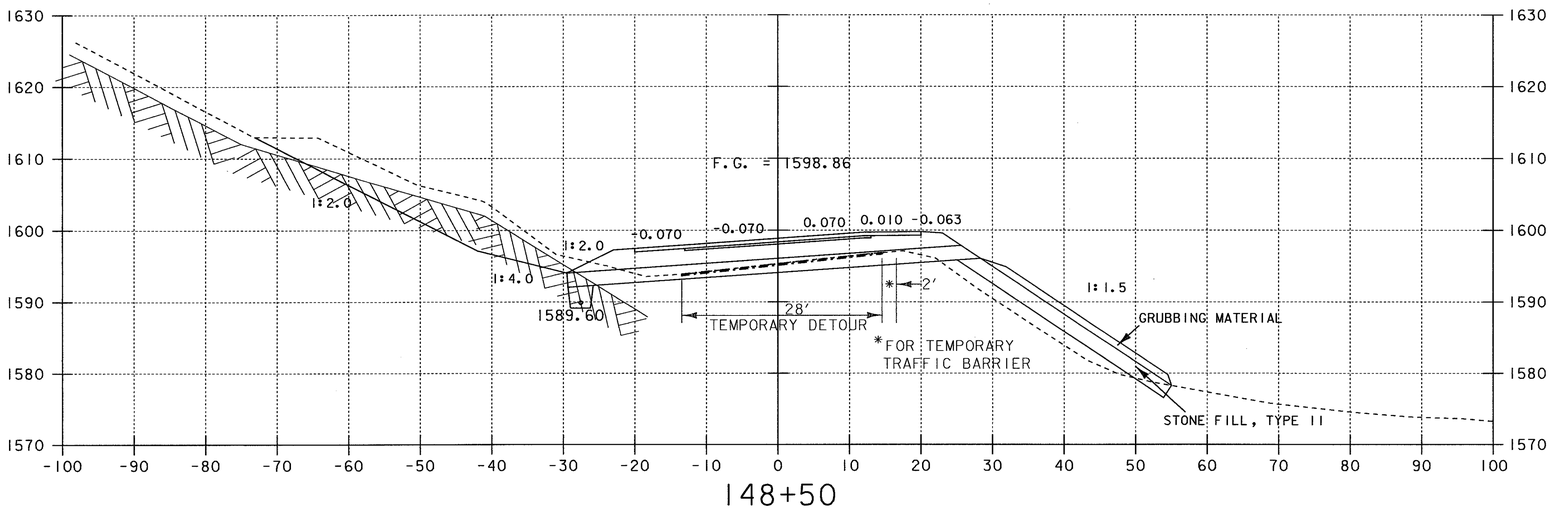

148+50

SECTION A-A @ STA. 149+04 LT.

NOT TO SCALE

BITUMINOUS CONCRETE PAVED DITCH

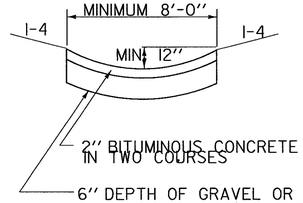

0 10 20

SCALE IN FEET

TEMPORARY DETOUR FOR GABION WALLS

PROJECT NAME:	SEARSBURG - WILMINGTON
PROJECT NUMBER:	NHF 010-1(18)
PLOT FILE NAME: DD096X27	PLOT DATE: 13-NOV-2001
PROJECT LEADER: DELLA SANTA	DRAWN BY: SQUAD B
DESIGN FILE NAME: 78D096/DESIGN/DD096CWRK.DGN:	
	SHEET 281 OF 435

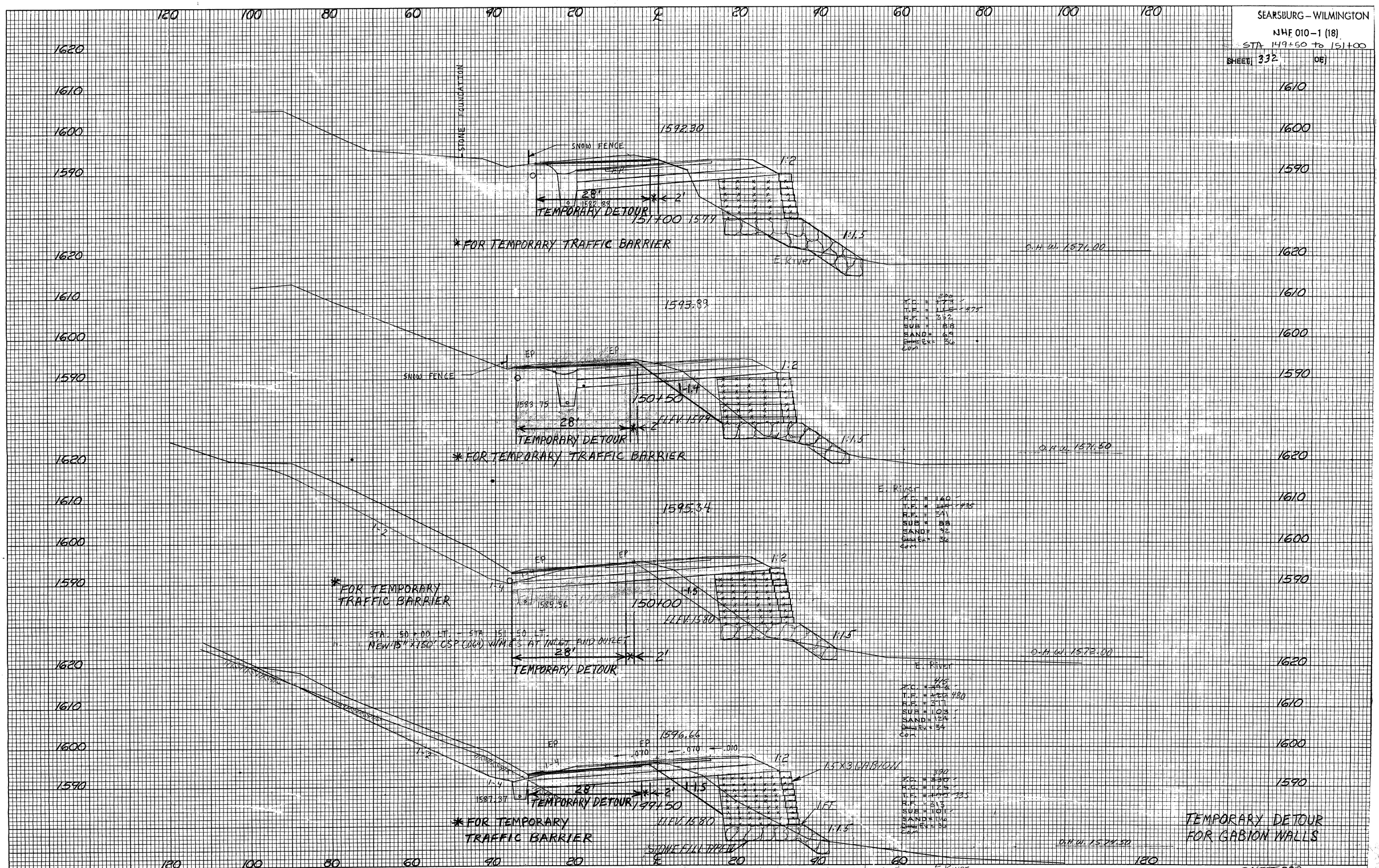
SEARSBURG – WILMINGTON
NHF 010-1 (18)
STA 149+50 to 151+00
SHEET 332 OF
STONE FOUNDATION
1592.30
SNOW FENCE
1:2
28'
2'
TEMPORARY DETOUR
151+00 1579
1:1.5
*FOR TEMPORARY TRAFFIC BARRIER
E. River
O.H.W. 1571.00
1593.89
EP
SNOW FENCE
1:2
1:1.4
150+50
1583.75
28'
2'
ELEV. 1579
TEMPORARY DETOUR
1:1.5
*FOR TEMPORARY TRAFFIC BARRIER
O.H.W. 1571.50
E. River
1595.34
1:2
EP
EP
1:2
*FOR TEMPORARY TRAFFIC BARRIER
1:1.5
1585.56
150+00
ELEV. 1580
STA. 150+00 LT. – STA. 151+50 LT.
NEW 15" X 150' CSP (.064) W/M.E.S. AT INLET AND OUTLET
28'
2'
TEMPORARY DETOUR
1:1.5
O.H.W. 1572.00
E. River
1596.66
EP
EP
.070
.070
.010
1:2
1.5 X 3 GABION
1:2
1:1.4
1:1.5
28'
2'
1587.37
TEMPORARY DETOUR
199+50
ELEV. 1580
1 FT
*FOR TEMPORARY TRAFFIC BARRIER
1:1.5
STONE FILL TYPE II
O.H.W. 1574.50
E. River
TEMPORARY DETOUR FOR GABION WALLS
SHEET 282
KEUFFEL & ESSER
PLATE 3, CROSS SECTION

SEARSBURG – WILMINGTON
NHF 010-1 (18)
STA. 151+50 TO 152+50
SHEET 333 OF

FINAL SURVEY — SURVEYED — PLOTTED — NOTE BOOK — TEMPLATE — AREAS — AREAS CHECKED — NO. — BY — DATE

ORIGINAL SURVEY — SURVEYED — PLOTTED — NOTE BOOK — TEMPLATE — AREAS — AREAS CHECKED — NO. — BY — DATE

SNOW FENCE
STONE FOUNDATION
1587.61
EP
EP
.063
.048
.048
.011
1590.27
152+50
28'
2'
TEMPORARY DETOUR
* FOR TEMPORARY TRAFFIC BARRIER
BEGIN DRILLING / BLASTING SOLID ROCK SUBGRADE 152+75
1:1 SLOPE
12" GRUBBING MATERIAL
O.H.W. 1569.00
E. River
T.C. = 316'
T.E. = 37'
R.F. = 108'
SUB = 88
SAND = 92
Subs Ex. = 55
Com.
RT. EDGE
RT. SHLDR.
LT. EDGE & SHLDR.
LT. SHLDR.
LT. EDGE
LT. SHLDR.
LT. EDGE
LT. SHLDR.
RT. SHLDR.
-0.021
-0.021
-0.063
9.0%
9.0%
BANKING TRANSITION
Scale:
1"= 50' Horiz.
1"= 0.05' Vert.
Dt. 17.90' LT.
Banking 0.070 Ft/Ft
152
153
154
155
1600
1590
1580
1570
1610
SNOW FENCE
1589.05
EP
EP
.070
.010
.010
1:1.5
6.0' Retainer
1:1.5
1:1.5
7.0' Cobbles
20' Cobbles
TERMINATED Rte 1 AP-11
1581.14
152+00
1579
28'
2'
TEMPORARY DETOUR
* FOR TEMPORARY TRAFFIC BARRIER
1:1.5
O.H.W. 1570.00
E. River
T.C. = 220'
T.E. = 94'
R.F. = 150'
SUB = 118
SAND = 99
Subs Ex. = 86
Com.
1600
1590
1580
1610
SNOW FENCE
1590.64
EP
EP
.070
.010
.010
1:2
1.5X3 GABION
1:1.5
1582.01
O.H.W. 1579
28'
2'
TEMPORARY DETOUR
151+50
STA. 151+43 CL.
REMOVE EXISTING 18" R.C.P.
STONE TYPE 'M'
1:1.5
O.H.W. 1570.50
E. River
T.C. = 233'
T.E. = 100'
R.F. = 140'
SUB = 87
SAND = 92
Subs Ex. = 86
Com.
1600
1590
1580
1610
TEMPORARY DETOUR FOR GABION WALLS

KEUFFEL & ESSER CO. PLATE 3, CROSS SECTION

SHEET 283

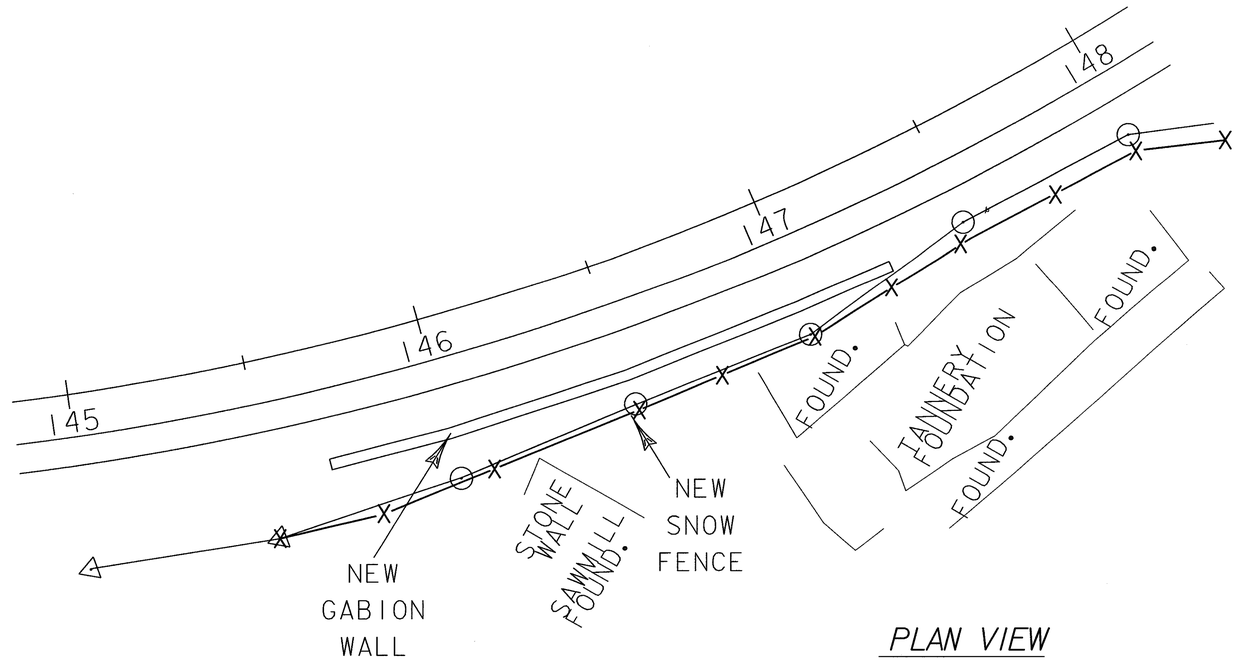

PLAN VIEW

0 20 40

SCALE IN FEET

GABION WALL
ML STA. 145+68 RT-147+28 RT

SNOW FENCE
"NO DISTURBANCE AREA"
(SEE SPECIAL PROVISIONS)
ML STA. 145+50 RT-148+25 RT

NOTE: NO CONSTRUCTION EQUIPMENT SHALL BE ALLOWED BEYOND THE TOE OF SLOPE LIMIT FROM ML STA. 145+50 RT-148+25 RT.

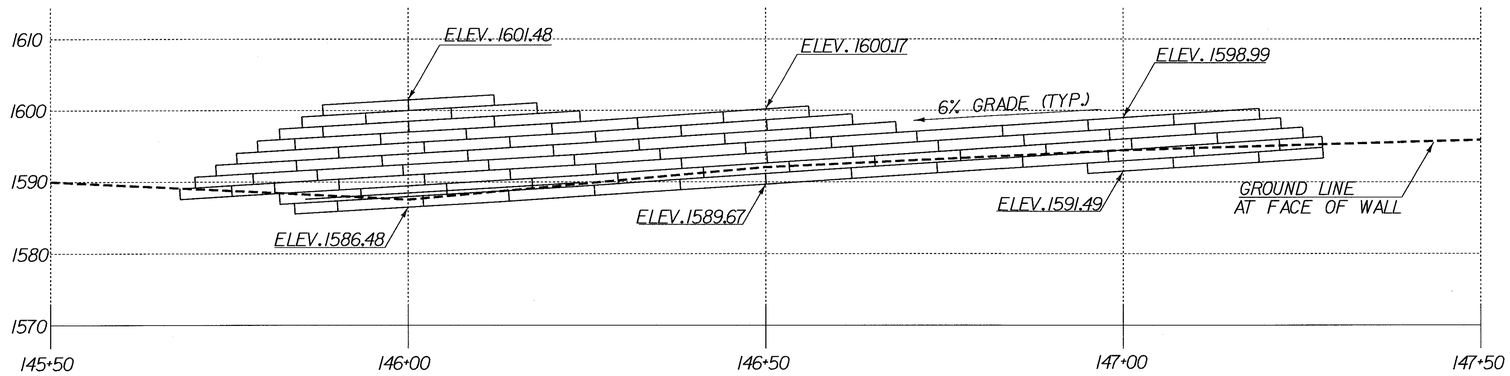

ELEVATION

0 10 20

HORIZONTAL AND VERTICAL
SCALE IN FEET

GABION MATERIALS:
SEE SPECIAL PROVISIONS

GABION WALL AT STA. 145+68 - 147+28 RT.

SURVEYED BY		DATE	
DRAWN BY	SQUAD B	DATE	8-4-92
SQUAD LEADER	DELLA SANTA		
DESIGN FILE NO.	/78D096/DESIGN/DD096.DGN		
IPARM FILE	DD096GBI	DATE PLOTTED	14-FEB-2002
PROJ. NAME	SEARSBURG-WILMINGTON		
PROJ. NO.	NHF 010-1(18)		
SHEET 284 OF 435 SHEETS			

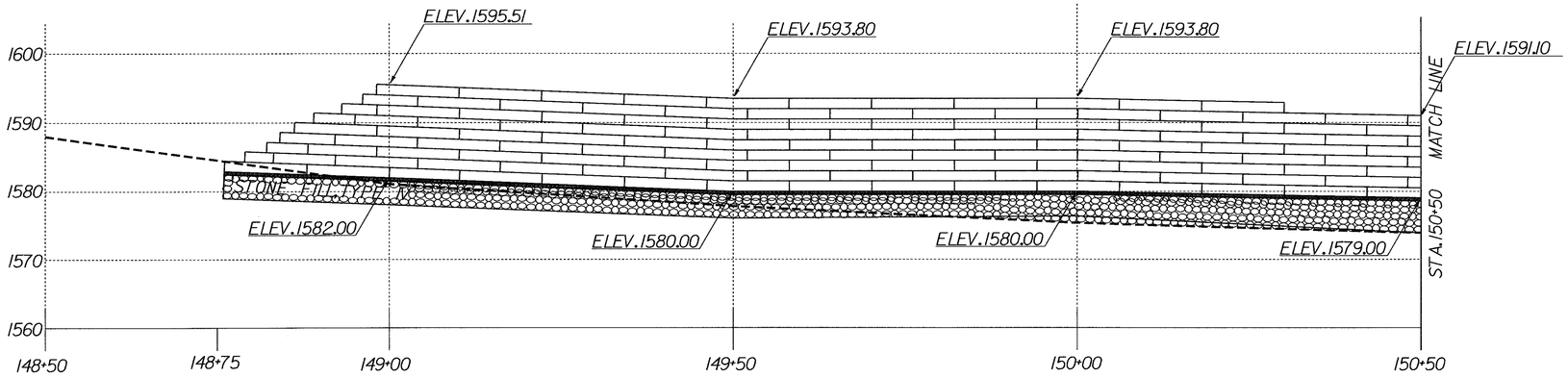

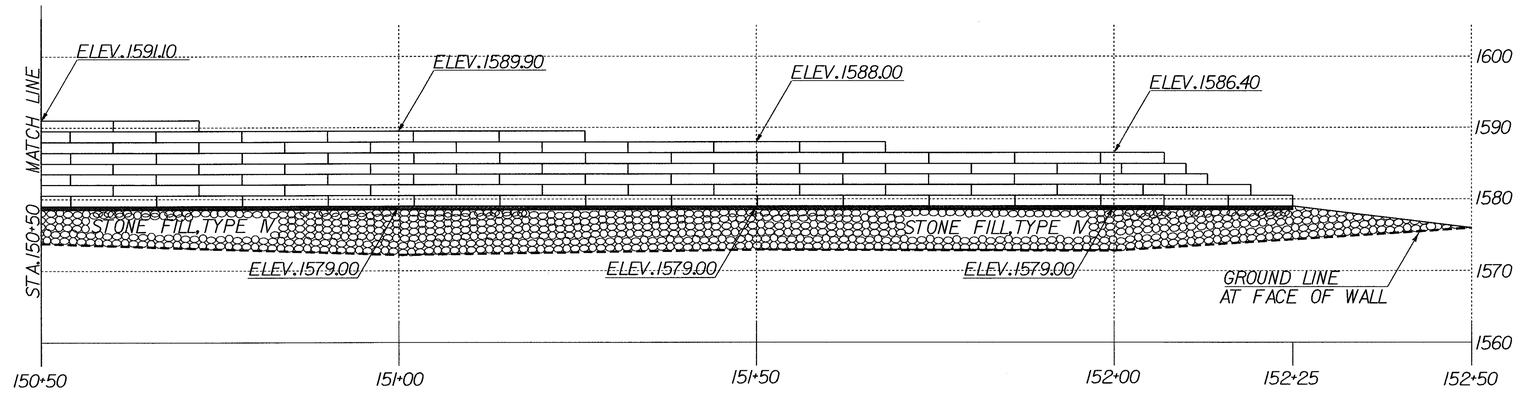

GABION MATERIALS:
SEE SPECIAL PROVISIONS

ELEVATION

0 10 20

HORIZONTAL AND VERTICAL
SCALE IN FEET

GABION WALL AT STA.148+75 - 152+25 RT.

SURVEYED BY		DATE	
DRAWN BY	SQUAD B	DATE	8-4-92
SQUAD LEADER	DELLA SANTA		
DESIGN FILE NO.	/78D096/DESIGN/DD096.DGN		
IPARM FILE	DD096GB2	DATE PLOTTED	14-FEB-2002
PROJ. NAME	SEARSBURG-WILMINGTON		
PROJ. NO.	NHF 010-1(18)		
SHEET 285 OF 435 SHEETS			

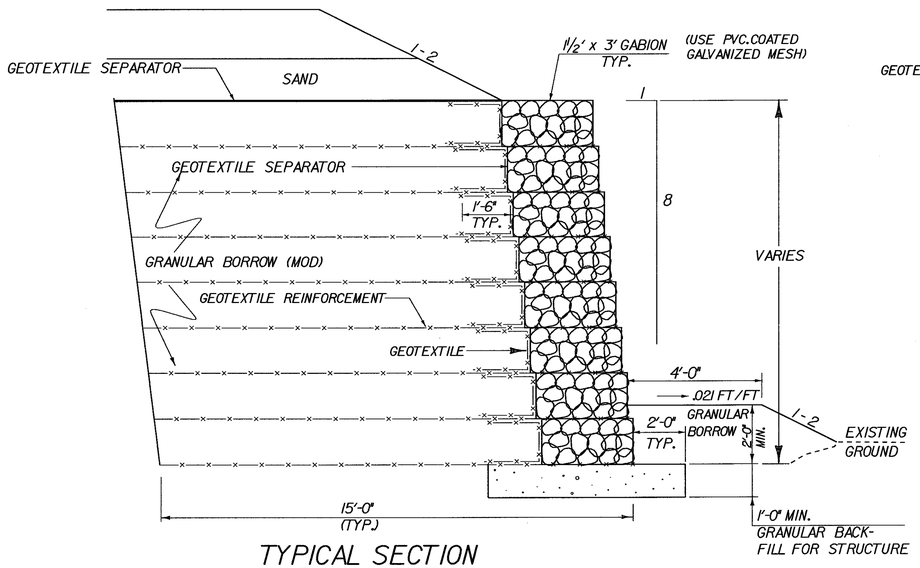

TYPICAL SECTION
FOR WALL HEIGHT
GREATER THAN 10.5'

ML STA.145+68 - 147+28 RT.

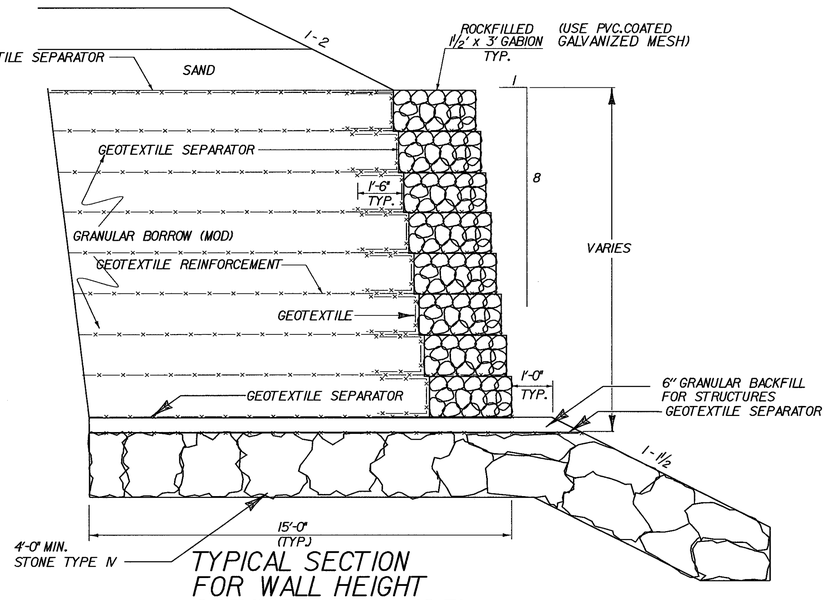

TYPICAL SECTION
FOR WALL HEIGHT
GREATER THAN 10.5'

ML STA.148+75 - 152+25 RT.

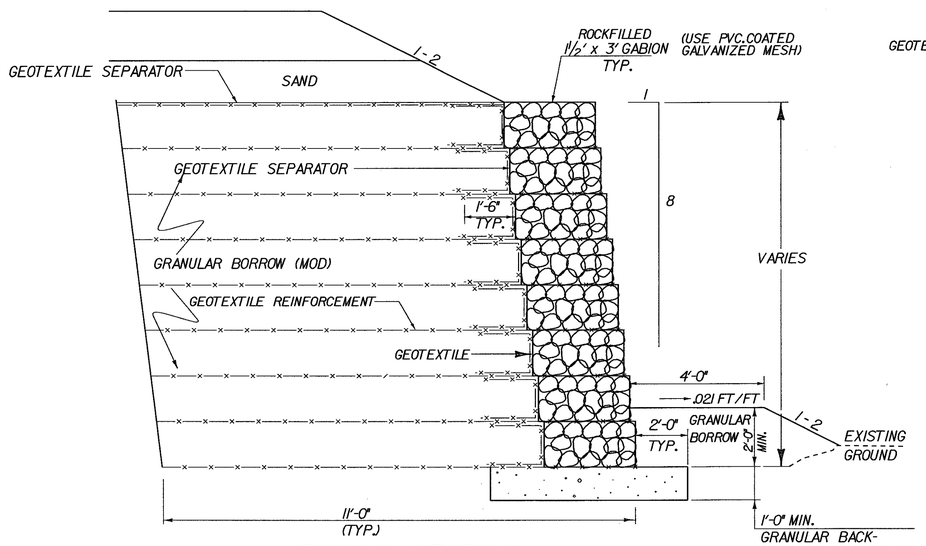

TYPICAL SECTION
FOR WALL HEIGHT LESS
THAN OR EQUAL TO 10.5'

ML STA.145+68 - 147+28 RT.

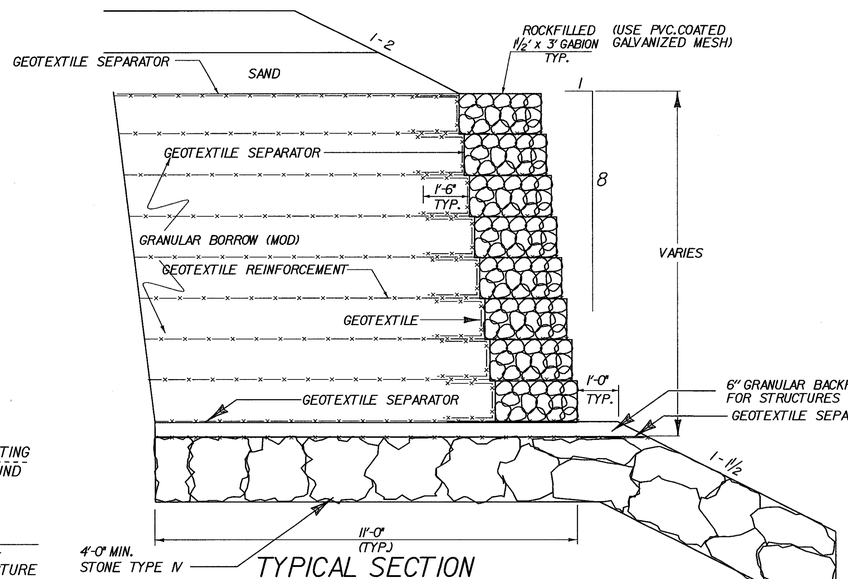

TYPICAL SECTION
FOR WALL HEIGHT LESS
THAN OR EQUAL TO 10.5'

ML STA.148+75 - 152+25 RT.

NOTES FOR GABION-FACED MECHANICALLY STABILIZED EARTH (MSE) WALL

1. MATERIAL PROPERTIES

FURNISH, ASSEMBLE, AND FILL WOVEN WIRE MESH BASKETS WITH ROCK TO FORM THE GABION FACE AS SPECIFIED IN SECTION 526 IN CONFORMITY WITH THE DIMENSIONS, LINES, AND GRADES SHOWN ON THE DRAWINGS.

THE GEOSYNTHETIC REINFORCEMENT SHALL BE COMPOSED OF HIGH TENACITY POLYESTER OR HIGH-DENSITY POLYETHYLENE MATERIAL AS SPECIFIED IN SECTION 526. THE GEOSYNTHETIC REINFORCEMENT SHALL BE RESISTANT TO ULTRAVIOLET DEGRADATION, INERT TO BIOLOGICAL DEGRADATION AND RESISTANT TO NATURALLY ENCOUNTERED CHEMICALS. THE GEOSYNTHETIC REINFORCEMENT SHALL BE APPROVED BY THE ENGINEER PRIOR TO PLACEMENT, AND SHALL HAVE A MINIMUM ULTIMATE STRENGTH OF 7000 LB/FT PER TEST METHOD GRI GG1. THE GEOSYNTHETIC REINFORCEMENT PRODUCT SHALL BE APPROVED BY THE ENGINEER. A TYPE D CERTIFICATE SHALL BE FURNISHED IN ACCORDANCE WITH SUBSECTION 700.02.

GRANULAR BORROW (MODIFIED) SHALL MEET THE FOLLOWING GRADATION REQUIREMENTS:

SIEVE SIZE	% PASSING
1.5 INCH	100
NO.4	20 - 100
NO.200	0 - 12

THE GEOTEXTILE USED UNDER STONE FILL AND BEHIND THE GABION FACE SHALL MEET THE REQUIREMENTS OF VAOT STANDARD SPECIFICATION 649.31, GEOTEXTILE UNDER STONE FILL, AND SHALL BE APPROVED BY THE ENGINEER PRIOR TO PLACEMENT.

2. HANDLING AND STORAGE

UPON DELIVERY AT THE SITE, ALL GEOSYNTHETIC REINFORCEMENT MATERIALS SHALL BE INSPECTED TO ENSURE PROPER MATERIAL STRENGTHS. A PRODUCT CERTIFICATION SHOULD BE PROVIDED WITH EACH SHIPMENT, STATING THAT THE MATERIAL CONFORMS TO PRODUCT SPECIFICATIONS PUBLISHED BY THE SUPPLIER. FOR EASE OF INSTALLATION, THE PRODUCT SHOULD BE STORED ABOVE -10 DEGREES F DURING WINTER MONTHS. CARE SHOULD BE TAKEN TO PREVENT MUD, WET CEMENT, EPOXY, AND OTHER SIMILAR MATERIALS, WHICH MAY PERMANENTLY AFFIX THEMSELVES TO GRIDWORK, FROM COMING IN CONTACT WITH THE GEOSYNTHETIC REINFOCEMENT.

3. GEOSYNTHETIC REINFORCEMENT PLACEMENT

PRIOR TO PLACING THE GEOSYNTHETIC REINFORCEMENT, THE EXCAVATION SHALL BE CLEANED OF ALL EXCESS MATERIAL AND THE FOUNDATION BASE PROOFROLLED TO PROVIDE A UNIFORM AND FIRM SURFACE. THE GEOSYNTHETIC REINFORCEMENT MUST BE PLACED WITH THE DESIGN STRENGTH DIRECTION PERPENDICULAR TO THE WALL FACE. THE GEOSYNTHETIC REINFORCEMENT SHALL EXTEND BACK FROM THE EXPOSED FACE OF THE WALL TO THE DISTANCE SPECIFIED ON THE PLANS. GEOSYNTHETIC REINFORCEMENT SHALL BE PLACED TO LAY FLAT AND PULLED TIGHT PRIOR TO BACKFILLING. PULL GEOSYNTHETIC REINFORCEMENT TIGHT WITH UNIFORM TENSION, USING A MECHANICAL RAKE WITH HINGE IN THE MIDDLE, AS A TENSIONING DEVISE, TO REMOVE ALL WRINKLES IN THE GEOSYNTHETIC REINFORCEMENT. PINS OR SMALL PILES OF SOIL SHALL BE USED TO HOLD THE GEOSYNTHETIC REINFORCEMENT IN POSITION UNTIL THE SUBSEQUENT SOIL LAYER CAN BE PLACED. ADJACENT GEOSYNTHETIC REINFORCEMENT SHOULD BE BUTTED TOGETHER SIDE-BY-SIDE WITHOUT OVERLAP.

4. REINFORCED BACKFILL PLACEMENT AND COMPACTION

GRANULAR BORROW (MOD.) SHALL BE PLACED AND SPREAD DIRECTLY UPON THE GEOSYNTHETIC REINFORCEMENT. EXTREME CARE SHALL BE TAKEN TO PREVENT WRINKLES AND/OR SLIPPAGE OF GEOSYNTHETIC REINFORCEMANT DURING GRANULAR BORROW (MOD.) PLACEMENT AND SPREADING. WHEN PRACTICAL, GRANULAR BORROW (MOD.) SHALL BE PLACED IN THE DIRECTION IN WHICH THE GEOSYNTHETIC REINFORCEMENT WAS LAID OUT TO ADD TENSIONING. IF GRANULAR BORROW (MOD.) IS PLACED TRANSVERSE TO THE ROLL LENGTH, SLIGHT (4 INCHES) OVERLAPS BETWEEN ROLL WIDTHS WITH THE TOP PIECE OF GEOSYNTHETIC REINFORCEMENT BEING THE FIRST TO RECEIVE GRANULAR BORROW (MOD.), WILL PREVENT PERMANENT FOLDING OF REINFORCEMENT. RUBBER-TIRED EQUIPMENT WILL BE ALLOWED TO PASS OVER BARE GEOSYNTHETIC REINFORCEMENT AT SLOW SPEEDS (LESS THAN 10 MPH) AND WITHOUT SUDDEN BRAKING. TRACK EQUIPMENT SHALL NOT BE ALLOWED ONTO BARE REINFORCEMENT. THERE SHALL BE A MINIMUM OF 6 INCHES OF GRANULAR BORROW (MOD.) ON TOP OF THE GEOSYNTHETIC REINFORCEMENT BEFORE TRACK EQUIPMENT CAN BE OPERATED. EACH LIFT OF GRANULAR BORROW (MOD.) SHALL BE COMPACTED TO 95% OF AASHTO T-99.

5. EROSION MATTING

TURF ESTABLISHMENT SHALL CONFORM TO SECTION 651 WITH THE EXCEPTION THAT TOPSOIL SHALL BE SPREAD EVENLY TO A DEPTH, AFTER COMPACTION, OF APPROXIMATELY 6 INCHES (MIN.) ON 1:2 SLOPES OR STEEPER. EROSION MATTING (MOD.) SHALL BE PLACED ON COMPACTED TOPSOIL AND LAID OUT PARALLEL TO THE FLOW OF WATER OR VERTICALLY ON SLOPES. ACCEPTABLE EROSION MATTING (MOD.) SHALL BE TENSAR EROSION MAT TM 3000 OR SYNTHETIC INDUSTRIES LANDLOK TM 1061. ANCHOR PINS SHALL BE 15 INCH LONG METAL PINS. METAL PINS SHALL BE 0.20-INCH DIAMETER STEEL WITH A 2-INCH DIAMETER WASHER SECURED TO THE HEAD OF THE PIN. EROSION MATTING (MOD.) SHALL BE SECURED AT THE TOP AND BOTTOM OF SLOPES AND AT 3-FOOT INTERVALS HORIZONTALLY AND VERTICALLY ALONG SLOPE. ANCHOR TRENCH ALONG THE TOP OF THE SLOPE SHALL BE BACKFILLED AND COMPACTED WITH DENSE GRADED CRUSHED STONE

NOT TO SCALE

PROJECT NAME:	SEARSBURG-WILMINGTON
PROJECT NUMBER:	NHF 010-1(18)
FILE NAME: m:design/78d096/dd096.dgn	PLOT DATE: 06-FEB-2002
PROJECT LEADER: DELLA SANTA	DRAWN BY: SQUAD B
DESIGNED BY: SQUAD B	CHECKED BY:
	SHEET 286 OF 435

dd096gscJ

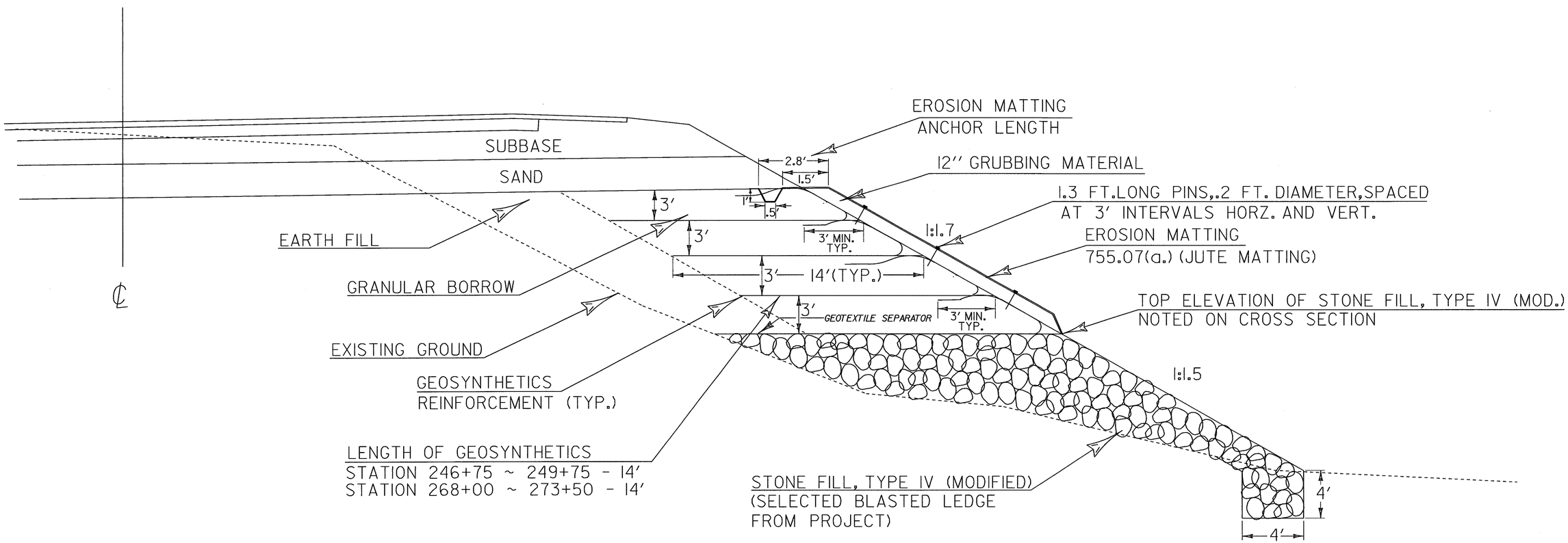

REINFORCED SOIL SLOPE NOTES

1. THE GEOGRID USED IN THE REINFORCED SOIL SLOPE SHALL BE UNIAXIAL GRID COMPOSED OF HIGH TENACITY POLYESTER, HIGH-DENSITY POLYETHYLENE, OR HIGH-DENSITY POLYPROPYLENE.

2. THE GEOGRID SHALL BE RESISTANT TO ULTRAVIOLET DEGRADATION, INERT TO BIOLOGICAL DEGRADATION, AND RESISTANT TO NATURALLY ENCOUNTERED CHEMICALS.

3. THE GEOGRID SHALL BE APPROVED BY THE ENGINEER PRIOR TO PLACEMENT AND SHALL MEET THE FOLLOWING REQUIREMENTS:

PROPERTY	REQUIREMENT	TEST METHOD
ULTIMATE REINFORCEMENT TENSILE STRENGTH, Tu	1500 lb./ft.	GRI GG-1
COEFFICIENT OF INTERACTION, C.I	0.7 (MIN)	GRI GG-5
COEFFICIENT OF INTERFACE FRICTION BETWEEN SOIL AND REINFORCEMENT, Wp	0.5 (MIN)	ASTM D 5321

4. THE GEOGRID REINFORCEMENT SHALL BE PLACED AS SPECIFIED IN SECTION 612, REINFORCED SOIL SLOPE, OF THE SPECIAL PROVISIONS. MATERIAL MEETING THE REQUIREMENTS OF SECTION 703.04, GRANULAR BORROW, SHALL BE USED FOR BACKFILL AND SHALL BE INCLUDED IN THE PRICE PAID FOR THE REINFORCED SOIL SLOPE.

REINFORCED SOIL SLOPE MATERIALS:
SEE SPECIAL PROVISIONS

NOT TO SCALE

DETAIL FOR CONSTRUCTION OF REINFORCED SLOPES

dd096rsdJ

PROJECT NAME: SEARSBURG-WILMINGTON
PROJECT NUMBER: NHF 010-1(18)

FILE NAME: m:design/78d096/dd096.dgn
PROJECT LEADER: DELLA SANTA
DESIGNED BY: SQUAD B

PLOT DATE: 05-FEB-2002
DRAWN BY: SQUAD B
CHECKED BY:
SHEET 287 OF 435

GENERAL NOTES (ALUMINUM ALLOY)

GATE FRAMES TO BE 1.900"DIAMETER NOMINAL PIPE,SCHEDULE 40, ASSEMBLED BY WELDING,OR BOLTING,AND SHALL BE FURNISHED COMPLETE WITH HARDWARE
GATE POSTS SHALL BE 2.875"DIAMETER NOMINAL PIPE,SCHEDULE 40
POST FOOTINGS:ALL POSTS SHALL BE SET TO DEPTH OF TWO (2) FEET 10 INCHES IN A 10"CYLINDRICAL SHAPED HOLE 3'-6" DEEP FILLED WITH CONCRETE

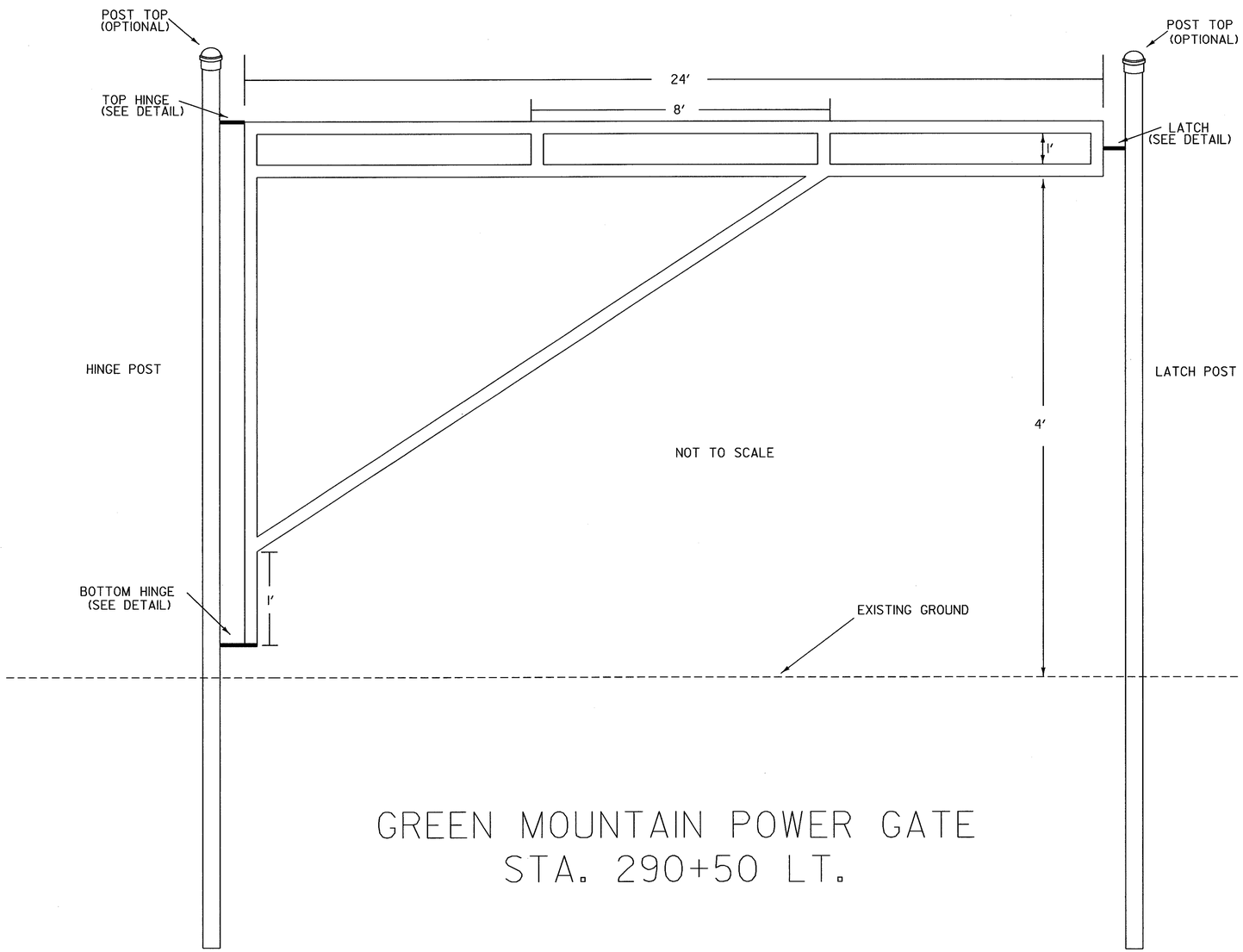

SEE POST FOOTING DETAIL

GREEN MOUNTAIN POWER GATE
STA. 290+50 LT.

NOT TO SCALE

WELDING DETAIL

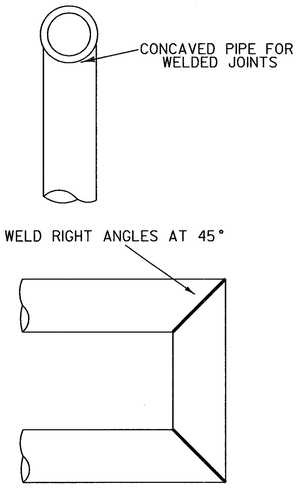

POST FOOTING DETAIL

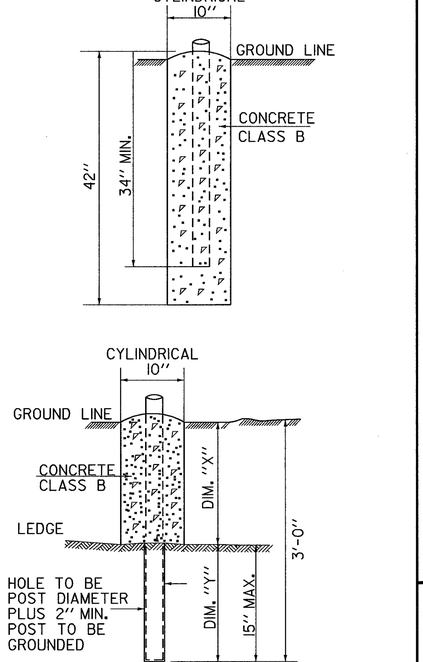

DIM. "Y"= 15" WHEN DIM. "X"VARIES BETWEEN 0" AND 24". WHEN DIM "X" EXCEEDS 24", DIM. "Y" DECREASES ACCORDINGLY

HARDWARE DETAIL

SPOT WELD ALL NUTS TO BOLTS (TO PREVENT VANDELISM)

TOP HINGE

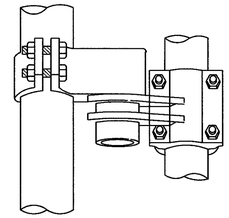

TYPICAL HINGE INSTALLATION FOR 180° SWING GATE

BOTTOM HINGE

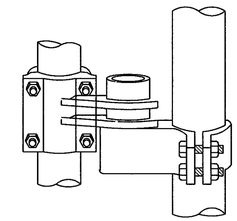

TYPICAL HINGE INSTALLATION FOR 180° SWING GATE

GATE LATCH

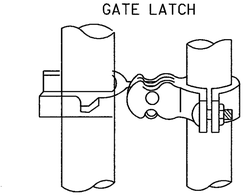

TYPICAL LATCH INSTALLATION FOR SWING GATE

POST TOP



SURVEYED BY		DATE	
DRAWN BY	SQUAD B	DATE	3/92
SQUAD LEADER	DELLA SANTA		
DESIGN FILE NO.	/SQDB/78D096/DD096.DGN		
PRF FILE	DD096GTE	DATE PLOTTED	13-NOV-2001
PROJ. NAME	SEARSBURG-WILMINGTON		
PROJ. NO.	F 010-1(18)		
SHEET	288 OF 435 SHEETS		

NOT TO SCALE

THIS SHEET IS FOR WETLANDS AND RARE AND ENDANGERED SPECIES ONLY

SNOW FENCE
STA. 96+50 LT - 107+00 LT
(TO PROTECT STATE PROTECTED PLANTS)

CABLE GUARD RAIL
96+50 LT - 110+00 LT
TERMINATE AT 110+00 BY BURYING IT IN BERM.

REMOVAL AND DISPOSAL OF GUARD RAIL
105+64 LT - 107+94 LT
108+90 LT - 109+77 LT

CONSTRUCT DRIVE
98+94 RT (PAVED)

RELOCATE MAILBOX, SINGLE SUPPORT
98+89 LT - 99+00 LT

LANDSCAPING ITEMS FOR MR. ZUCKER'S PROPERTY
(PLANTING LOCATION TO BE DETERMINED BY PROPERTY OWNER AND RESIDENT ENGINEER)
ONE 1½'' CORTLAND APPLE TREE (SEMI-DWARF)
ONE 1½'' MCINTOSH APPLE TREE (SEMI-DWARF)
ONE 7 GAL. LIBERTY APPLE TREE (SEMI-DWARF)
ONE 7 GAL. RED DELICIOUS APPLE TREE (SEMI-DWARF)
ONE 4 IN 1 APPLE TREE (SEMI-DWARF)
(CORTLAND, LODI, MCINTOSH AND SUMMER RED)
FOUR 6-7' PICEA GLAUCA (EVERGREEN TREES)

EXISTING CURVE DATA
Δ = 13°-05' RT
D = 1°
R = 5729.58'
T = 657.02'
L = 1308.33'
E = 37.55'
BANK: 0.021 FT./FT.

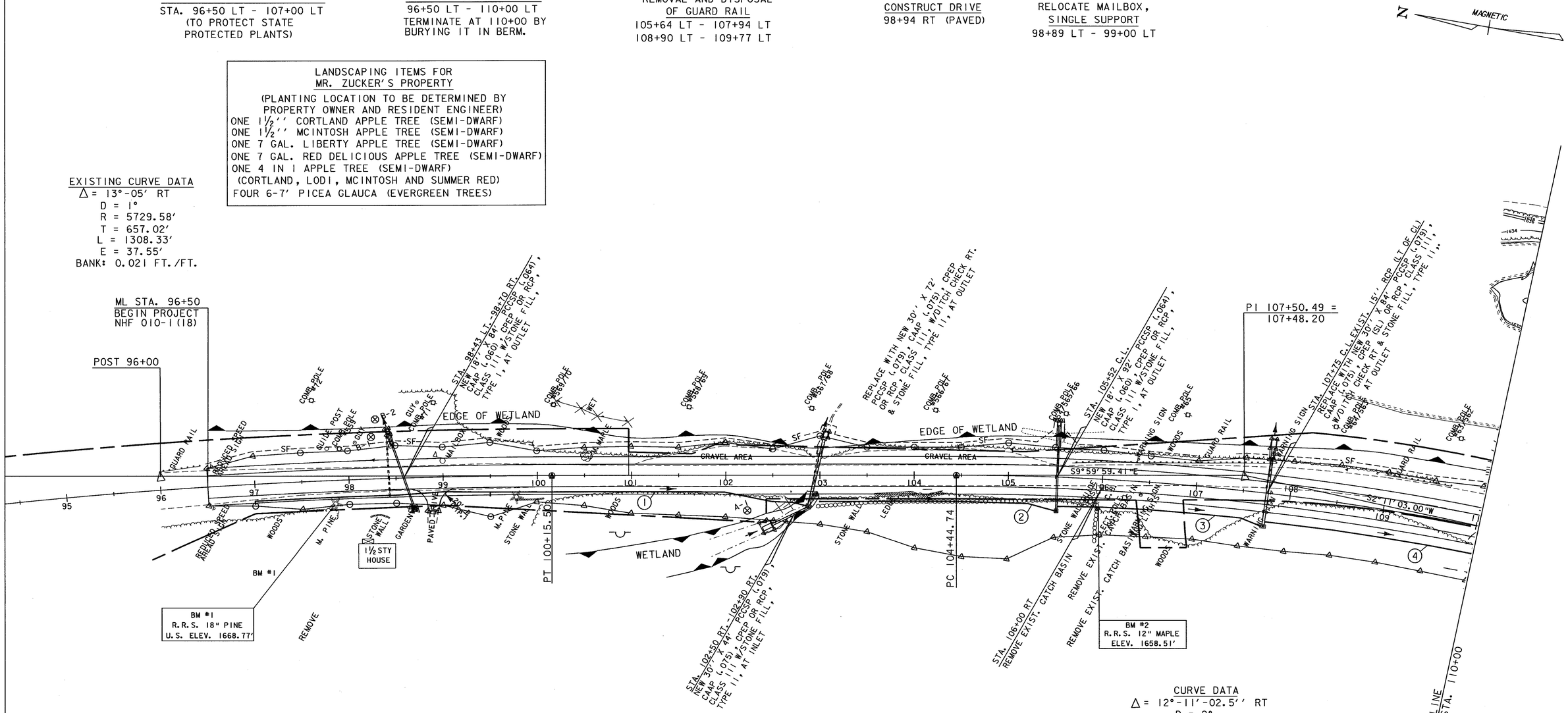
N
MAGNETIC
ML STA. 96+50
BEGIN PROJECT
NHF 010-1(18)
POST 96+00
EDGE OF WETLAND
GUARD RAIL
REMOVE EXIST. GUIDE POST
REMOVE EXIST. GUY WIRE
REMOVE EXIST. GUY POLE
REMOVE EXIST. COMB. POLE
REMOVE EXIST. SIGN
REMOVE EXIST. CATCH BASIN
REMOVE EXIST. CONC. BASE
REMOVE EXIST. MAILBOX
REMOVE EXIST. GUARD RAIL
REMOVE EXIST. WARNING SIGN
REMOVE EXIST. CONC. WALK
REMOVE EXIST. CONC. DRIVE
REMOVE EXIST. STONE WALL
REMOVE EXIST. 1½ STY HOUSE
REMOVE EXIST. GARDEN
REMOVE EXIST. PAVED DRIVE
REMOVE EXIST. WOODS
REMOVE EXIST. M. PINE
REMOVE EXIST. MAPLE
REMOVE EXIST. LEDGE
REMOVE EXIST. GRAVEL AREA
REMOVE EXIST. WET AREA
REMOVE EXIST. SF
REMOVE EXIST. A/C
REMOVE EXIST. WATER LINE
REMOVE EXIST. GAS LINE
REMOVE EXIST. TELEPHONE LINE
REMOVE EXIST. ELECTRIC LINE
REMOVE EXIST. COMB. POLE
REMOVE EXIST. GUY & COMB. POLE
REMOVE EXIST. GUY & POLE
REMOVE EXIST. POLE
REMOVE EXIST. GUY
REMOVE EXIST. GUY & POLE
REMOVE EXIST. GUY & COMB. POLE
REMOVE EXIST. COMB. POLE & GUY
REMOVE EXIST. COMB. POLE & GUY & POLE
REMOVE EXIST. COMB. POLE & GUY & COMB. POLE
REMOVE EXIST. COMB. POLE & GUY & COMB. POLE & GUY
REMOVE EXIST. COMB. POLE & GUY & COMB. POLE & GUY & POLE
REMOVE EXIST. COMB. POLE & GUY & COMB. POLE & GUY & COMB. POLE
REMOVE EXIST. COMB. POLE & GUY & COMB. POLE & GUY & COMB. POLE & GUY
REMOVE EXIST. COMB. POLE & GUY & COMB. POLE & GUY & COMB. POLE & GUY & POLE
REMOVE EXIST. COMB. POLE & GUY & COMB. POLE & GUY & COMB. POLE & GUY & COMB. POLE
REMOVE EXIST. COMB. POLE & GUY & COMB. POLE & GUY & COMB. POLE & GUY & COMB. POLE & GUY
REMOVE EXIST. COMB. POLE & GUY & COMB. POLE & GUY & COMB. POLE & GUY & COMB. POLE & GUY & POLE
REMOVE EXIST. COMB. POLE & GUY & COMB. POLE & GUY & COMB. POLE & GUY & COMB. POLE & GUY & COMB. POLE
REMOVE EXIST. COMB. POLE & GUY & COMB. POLE & GUY & COMB. POLE & GUY & COMB. POLE & GUY & COMB. POLE & GUY
REMOVE EXIST. COMB. POLE & GUY & COMB. POLE & GUY & COMB. POLE & GUY & COMB. POLE & GUY & COMB. POLE & GUY & POLE
REMOVE EXIST. COMB. POLE & GUY & COMB. POLE & GUY & COMB. POLE & GUY & COMB. POLE & GUY & COMB. POLE & GUY & COMB. POLE
REMOVE EXIST. COMB. POLE & GUY & COMB. POLE & GUY & COMB. POLE & GUY & COMB. POLE & GUY & COMB. POLE & GUY & COMB. POLE & GUY
REMOVE EXIST. COMB. POLE & GUY & COMB. POLE & GUY & COMB. POLE & GUY & COMB. POLE & GUY & COMB. POLE & GUY & COMB. POLE & GUY & POLE
REMOVE EXIST. COMB. POLE & GUY & COMB. POLE & GUY & COMB. POLE & GUY & COMB. POLE & GUY & COMB. POLE & GUY & COMB. POLE & GUY & COMB. POLE
REMOVE EXIST. COMB. POLE & GUY & COMB. POLE & GUY & COMB. POLE & GUY & COMB. POLE & GUY & COMB. POLE & GUY & COMB. POLE & GUY & COMB. POLE & GUY
REMOVE EXIST. COMB. POLE & GUY & COMB. POLE & GUY & COMB. POLE & GUY & COMB. POLE & GUY & COMB. POLE & GUY & COMB. POLE & GUY & COMB. POLE & GUY & POLE
REMOVE EXIST. COMB. POLE & GUY & COMB. POLE & GUY & COMB. POLE & GUY & COMB. POLE & GUY & COMB. POLE & GUY & COMB. POLE & GUY & COMB. POLE & GUY & COMB. POLE
REMOVE EXIST. COMB. POLE & GUY & COMB. POLE & GUY & COMB. POLE & GUY & COMB. POLE & GUY & COMB. POLE & GUY & COMB. POLE & GUY & COMB. POLE & GUY & COMB. POLE & GUY
REMOVE EXIST. COMB. POLE & GUY & COMB. POLE & GUY & COMB. POLE & GUY & COMB. POLE & GUY & COMB. POLE & GUY & COMB. POLE & GUY & COMB. POLE & GUY & COMB. POLE & GUY & POLE
REMOVE EXIST. COMB. POLE & GUY & COMB. POLE & GUY & COMB. POLE & GUY & COMB. POLE & GUY & COMB. POLE & GUY & COMB. POLE & GUY & COMB. POLE & GUY & COMB. POLE & GUY & COMB. POLE
REMOVE EXIST. COMB. POLE & GUY & COMB. POLE & GUY & COMB. POLE & GUY & COMB. POLE & GUY & COMB. POLE & GUY & COMB. POLE & GUY & COMB. POLE & GUY & COMB. POLE & GUY & COMB. POLE & GUY
REMOVE EXIST. COMB. POLE & GUY & COMB. POLE & GUY & COMB. POLE & GUY & COMB. POLE & GUY & COMB. POLE & GUY & COMB. POLE & GUY & COMB. POLE & GUY & COMB. POLE & GUY & COMB. POLE & GUY & POLE
REMOVE EXIST. COMB. POLE & GUY & COMB. POLE & GUY & COMB. POLE & GUY & COMB. POLE & GUY & COMB. POLE & GUY & COMB. POLE & GUY & COMB. POLE & GUY & COMB. POLE & GUY & COMB. POLE & GUY & COMB. POLE
REMOVE EXIST. COMB. POLE & GUY & COMB. POLE & GUY & COMB. POLE & GUY & COMB. POLE & GUY & COMB. POLE & GUY & COMB. POLE & GUY & COMB. POLE & GUY & COMB. POLE & GUY & COMB. POLE & GUY & COMB. POLE & GUY
REMOVE EXIST. COMB. POLE & GUY & COMB. POLE & GUY & COMB. POLE & GUY & COMB. POLE & GUY & COMB. POLE & GUY & COMB. POLE & GUY & COMB. POLE & GUY & COMB. POLE & GUY & COMB. POLE & GUY & COMB. POLE & GUY & POLE
REMOVE EXIST. COMB. POLE & GUY & COMB. POLE & GUY & COMB. POLE & GUY & COMB. POLE & GUY & COMB. POLE & GUY & COMB. POLE & GUY & COMB. POLE & GUY & COMB. POLE & GUY & COMB. POLE & GUY & COMB. POLE & GUY & COMB. POLE
REMOVE EXIST. COMB. POLE & GUY & COMB. POLE & GUY & COMB. POLE & GUY & COMB. POLE & GUY & COMB. POLE & GUY & COMB. POLE & GUY & COMB. POLE & GUY & COMB. POLE & GUY & COMB. POLE & GUY & COMB. POLE & GUY & COMB. POLE & GUY
REMOVE EXIST. COMB. POLE & GUY & COMB. POLE & GUY & COMB. POLE & GUY & COMB. POLE & GUY & COMB. POLE & GUY & COMB. POLE & GUY & COMB. POLE & GUY & COMB. POLE & GUY & COMB. POLE & GUY & COMB. POLE & GUY & COMB. POLE & GUY & POLE
REMOVE EXIST. COMB. POLE & GUY & COMB. POLE & GUY & COMB. POLE & GUY & COMB. POLE & GUY & COMB. POLE & GUY & COMB. POLE & GUY & COMB. POLE & GUY & COMB. POLE & GUY & COMB. POLE & GUY & COMB. POLE & GUY & COMB. POLE & GUY & COMB. POLE
REMOVE EXIST. COMB. POLE & GUY &

THIS SHEET IS FOR WETLANDS AND RARE AND ENDANGERED SPECIES ONLY

CONSTRUCT DRIVE
110+47 RT (GRAVEL)

TREATED TIMBER CURB
REV. 113+00 LT-REV. 118+61 LT.
REV. 121+09 LT-REV. 124+83 LT.

STEEL BEAM GUARD RAIL
110+75 LT - 118+00 LT
BURY THE BEGINNING IN BERM (NO TERMINAL)
121+09 LT - 125+00 LT
113+25 RT - 118+86.50 RT
121+63.50 RT - 125+00 RT

GUARD RAIL APPROACH SECTION, NETC 2 RAIL (MOD.)
118+00 LT - 118+25 LT
121+04 LT -121+29 LT
118+86.50 RT - 119+11.50 RT
121+38.50 RT - 121+63.50 RT

BRIDGE RAIL-NETC 2 RAIL
118+25 LT - 121+04 LT
119+11.50 RT - 121+38.50 RT

CURVE DATA
Δ= 41°-45'-47.87'' LT
D = 4°-30'
R = 1273.24'
T = 485.74'
L = 928.07'
E = 89.51'
BANK: 0.067 FT./FT.

REMOVAL & DISPOSAL OF GUARD RAIL
110+90 LT - 115+85 LT
115+36 RT - 115+88 RT
116+13 LT - 118+29 LT
116+16 RT - 118+44 LT
120+12 LT - 124+07 LT

N MAGNETIC

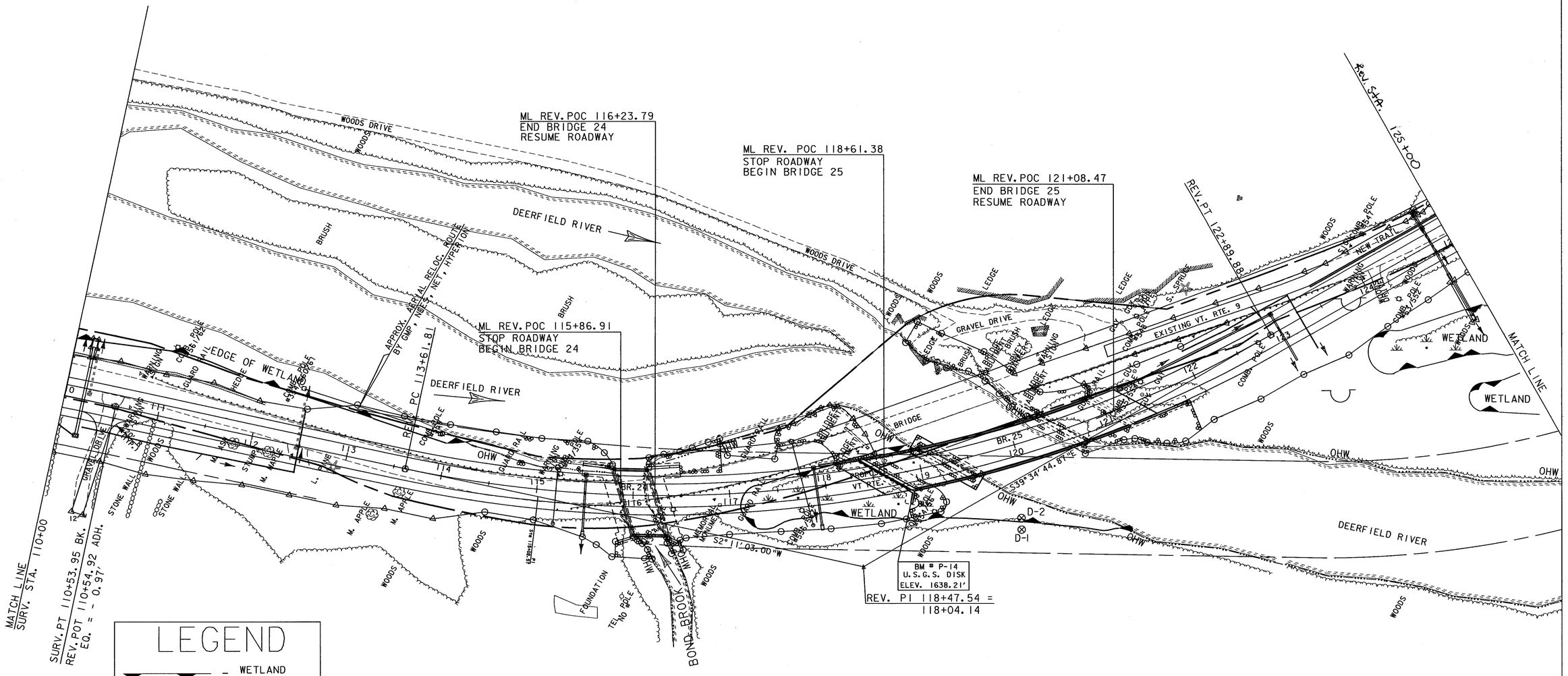

LEGEND

= WETLAND BOUNDARY

= UPLAND SYMBOL

= ORDINARY HIGH WATER

⊗ = COE DATA

0 50 100
SCALE IN FEET

PROJECT NAME:	SEARSBURG - WILMINGTON
PROJECT NUMBER:	NHF 010-1(18)
PLOT FILE NAME: DD096WT2	PLOT DATE: 26-DEC-2001
PROJECT LEADER: DELLA SANTA	DRAWN BY: SQUAD B
DESIGN FILE: 78D096/DESIGN/DD096NEC.DGN	
	SHEET 290 OF 435

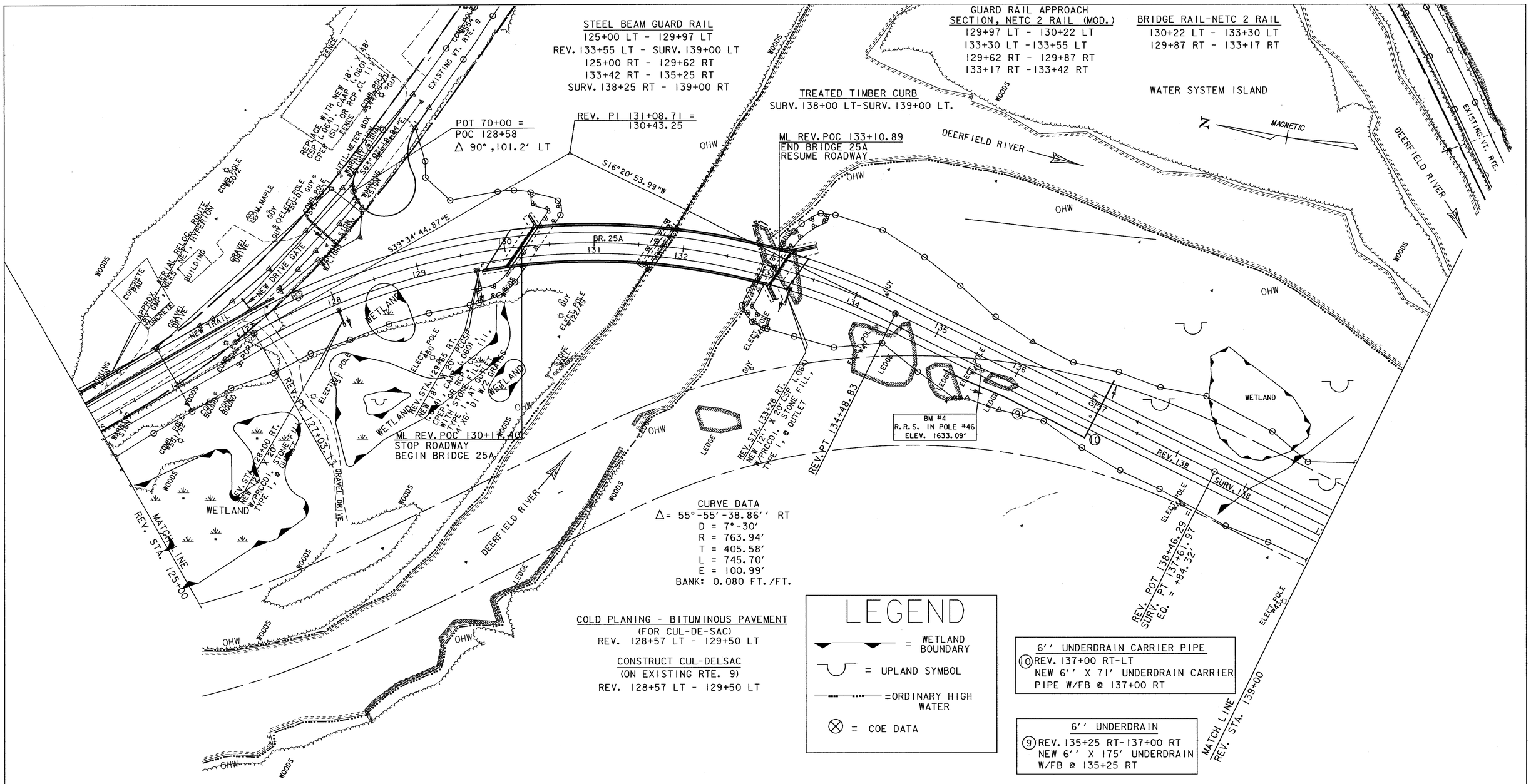

THIS SHEET IS FOR WETLANDS AND RARE AND ENDANGERED SPECIES ONLY

WATER SYSTEM ISLAND

THE WATER SYSTEM ISLAND TO THE EAST OF THE NEW ALIGNMENT AND BETWEEN THE TWO BRANCHES OF THE DEERFIELD RIVER SHALL BE CONSIDERED A "NO DISTURBANCE AREA" AND, THEREFORE, NO CONSTRUCTION ACTIVITY SHALL BE CONDUCTED ON THIS ISLAND.

0 50 100
SCALE IN FEET

PROJECT NAME: SEARSBURG - WILMINGTON
PROJECT NUMBER: NHF 010-1(18)

PLOT FILE NAME: dd096wt3.1
PROJECT LEADER: DELLA SANTA
DESIGN FILE: 78d096/design/dd096nec.dgn
PLOT DATE: 26-DEC-2001
DRAWN BY: SQUAD B

THIS SHEET IS FOR WETLANDS AND RARE AND ENDANGERED SPECIES ONLY

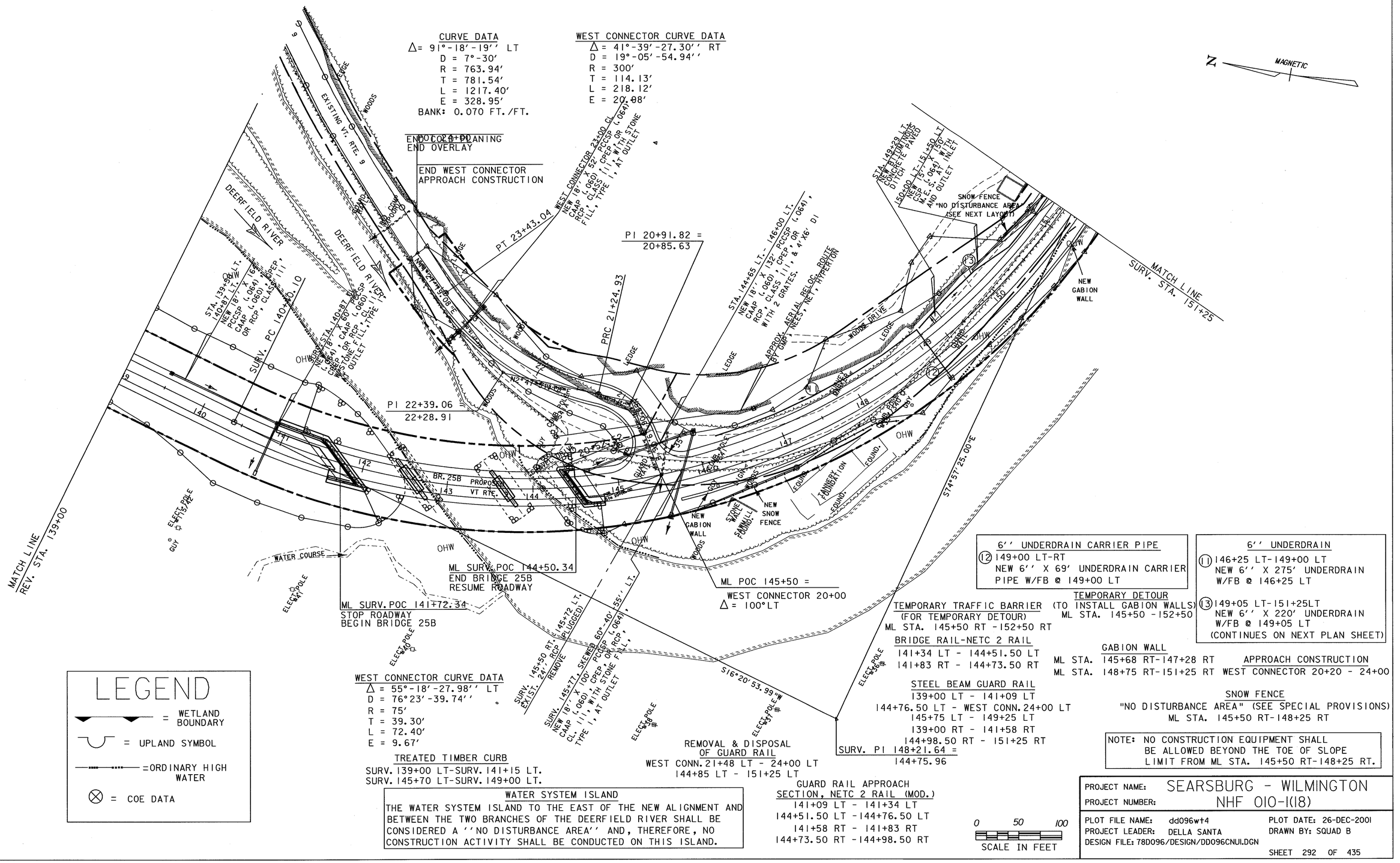

LEGEND

- = WETLAND BOUNDARY
- = UPLAND SYMBOL
- = ORDINARY HIGH WATER
- ⊗ = COE DATA

WEST CONNECTOR CURVE DATA
Δ = 55°-18'-27.98'' LT
D = 76°23'-39.74''
R = 75'
T = 39.30'
L = 72.40'
E = 9.67'

TREATED TIMBER CURB
SURV. 139+00 LT-SURV. 141+15 LT.
SURV. 145+70 LT-SURV. 149+00 LT.

WATER SYSTEM ISLAND
THE WATER SYSTEM ISLAND TO THE EAST OF THE NEW ALIGNMENT AND BETWEEN THE TWO BRANCHES OF THE DEERFIELD RIVER SHALL BE CONSIDERED A ''NO DISTURBANCE AREA'' AND, THEREFORE, NO CONSTRUCTION ACTIVITY SHALL BE CONDUCTED ON THIS ISLAND.

REMOVAL & DISPOSAL OF GUARD RAIL
WEST CONN. 21+48 LT - 24+00 LT
144+85 LT - 151+25 LT

GUARD RAIL APPROACH SECTION, NETC 2 RAIL (MOD.)
141+09 LT - 141+34 LT
144+51.50 LT - 144+76.50 LT
141+58 RT - 141+83 RT
144+73.50 RT - 144+98.50 RT

6'' UNDERDRAIN CARRIER PIPE
(12) 149+00 LT-RT
NEW 6'' X 69' UNDERDRAIN CARRIER PIPE W/FB @ 149+00 LT

TEMPORARY TRAFFIC BARRIER
(FOR TEMPORARY DETOUR)
ML STA. 145+50 RT - 152+50 RT

BRIDGE RAIL-NETC 2 RAIL
141+34 LT - 144+51.50 LT
141+83 RT - 144+73.50 RT

STEEL BEAM GUARD RAIL
139+00 LT - 141+09 LT
144+76.50 LT - WEST CONN. 24+00 LT
145+75 LT - 149+25 LT
139+00 RT - 141+58 RT
144+98.50 RT - 151+25 RT

SURV. PI 148+21.64 =
144+75.96

TEMPORARY DETOUR
(TO INSTALL GABION WALLS)
ML STA. 145+50 - 152+50

GABION WALL
ML STA. 145+68 RT-147+28 RT
ML STA. 148+75 RT-151+25 RT

APPROACH CONSTRUCTION
WEST CONNECTOR 20+20 - 24+00

SNOW FENCE
"NO DISTURBANCE AREA" (SEE SPECIAL PROVISIONS)
ML STA. 145+50 RT-148+25 RT

6'' UNDERDRAIN
(11) 146+25 LT-149+00 LT
NEW 6'' X 275' UNDERDRAIN W/FB @ 146+25 LT

(13) 149+05 LT-151+25LT
NEW 6'' X 220' UNDERDRAIN W/FB @ 149+05 LT
(CONTINUES ON NEXT PLAN SHEET)

NOTE: NO CONSTRUCTION EQUIPMENT SHALL BE ALLOWED BEYOND THE TOE OF SLOPE LIMIT FROM ML STA. 145+50 RT-148+25 RT.

0 50 100
SCALE IN FEET

PROJECT NAME: SEARSBURG - WILMINGTON
PROJECT NUMBER: NHF 010-1(18)

PLOT FILE NAME: dd096wt4
PROJECT LEADER: DELLA SANTA
DESIGN FILE: 78D096/DESIGN/DD096CNU.DGN
PLOT DATE: 26-DEC-2001
DRAWN BY: SQUAD B

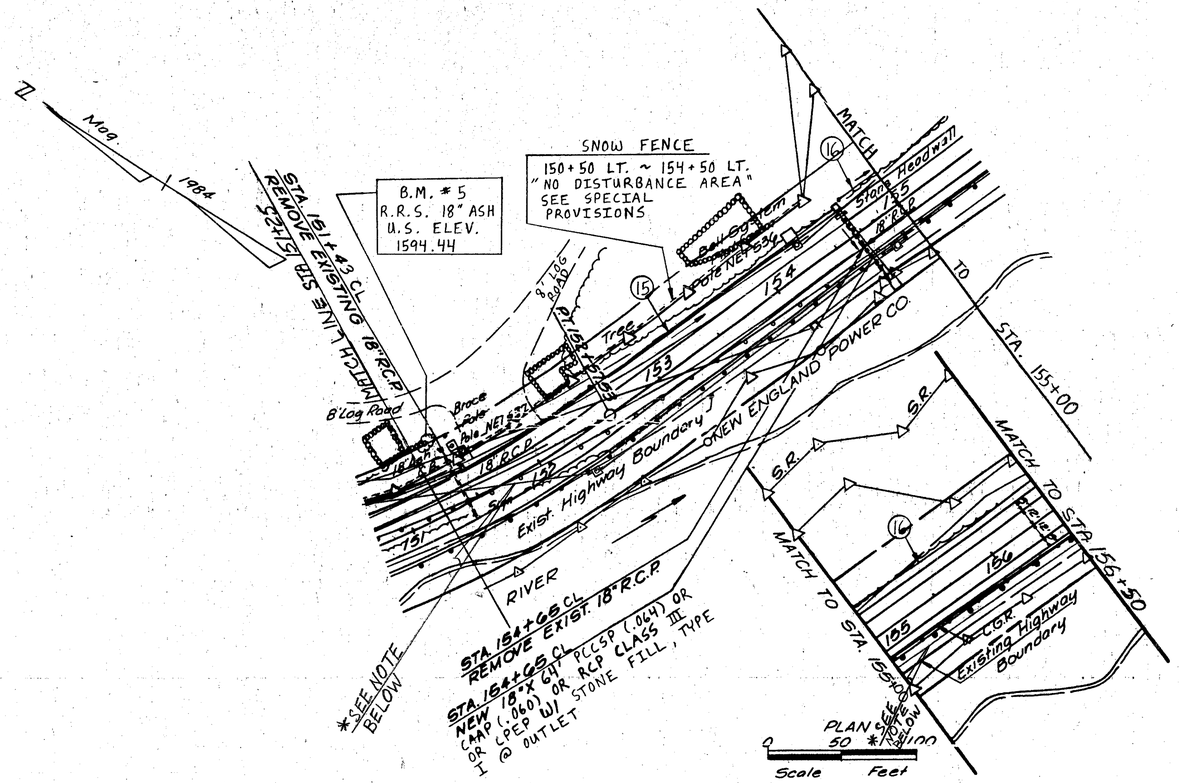

*NOTE: APPROX. AERIAL RELOC. ROUTE BY GMP, NEES, NET, HYPERION

THIS SHEET IS FOR WETLANDS AND RARE AND ENDANGERED SPECIES ONLY

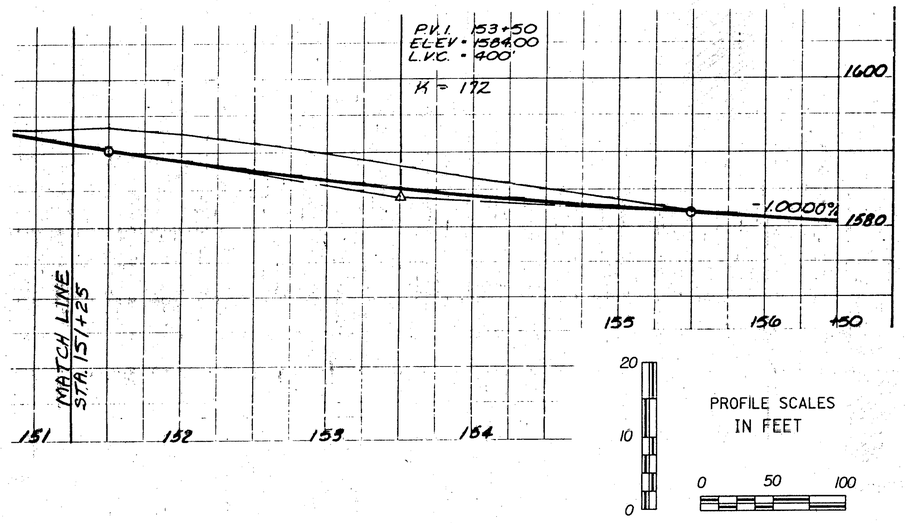

LEGEND

- = WETLAND BOUNDARY
- = UPLAND SYMBOL
- = ORDINARY HIGH WATER
- ⊗ = COE DATA

PROJECT NAME:	SEARSBURG - WILMINGTON
PROJECT NUMBER:	NHF 010-1(18)
PLOT FILE NAME:	DD096L05
PROJECT LEADER:	DELLA SANTA
DESIGN FILE:	78D096/DESIGN/DD096CBR.DGN
PLOT DATE:	07-OCT-2000
DRAWN BY:	SQUAD B

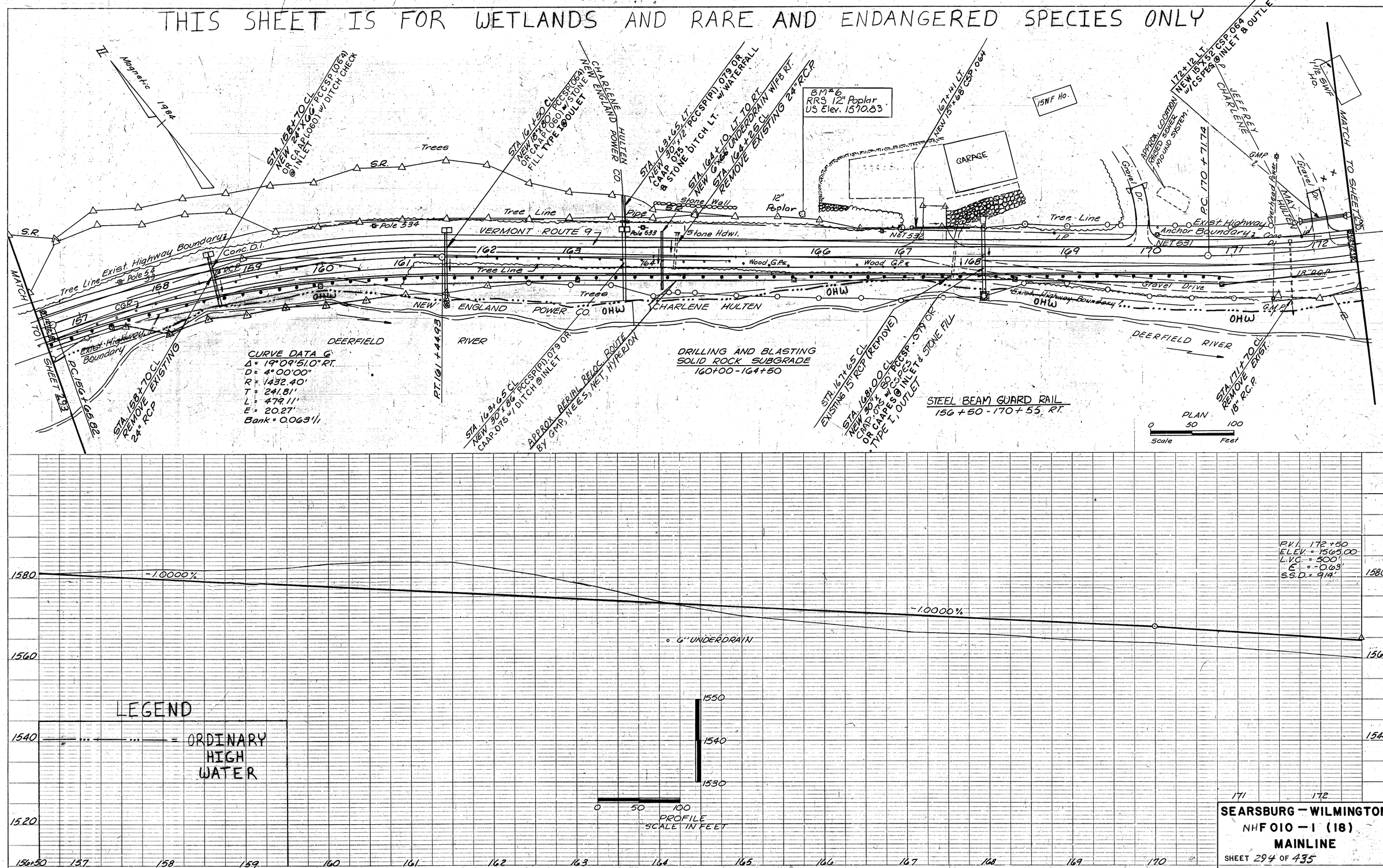
THIS SHEET IS FOR WETLANDS AND RARE AND ENDANGERED SPECIES ONLY
Magnetic 1984
STA. 158+70 CL. NEW 24"x66' PCCSP(.064) OR CAAP(.060) w/ DITCH CHECK @ INLET
STA. 161+50 CL. NEW 18"x80' PCCSP(.064) OR CAAP(.060) w/ STONE FILL TYPE I @ OULET
CHARLENE HULTEN NEW ENGLAND POWER CO.
STA. 163+65 LT. NEW 30"x12' PCCSP(.01) .079 OR CAAP .075 & STONE DITCH LT.
STA. 164+10 LT. TO RT. NEW 6"x66' UNDERDRAIN W/FB RT.
STA. 164+25 CL. REMOVE EXISTING 24" R.C.P.
BM #6 RRS 12" Poplar US Elev. 1570.83
167+41 LT. NEW 15"x68' CSP .064
GARAGE
15WF Ho.
172+12 LT. NEW 15"x52' CSP .064 w/ CSPES @ INLET & OUTLET
APPROX. LOCATION RAISED SEWER MOUND SYSTEM
JEFFREY CHARLENE
1½ SWF Ho.
MATCH TO SHEET 295
MATCH TO SHEET 293
S.R.
Trees
Tree Line
Pipe
Stone Wall
12" Poplar
Pole 534
Pole 533
Stone Hdwl.
VERMONT ROUTE 9
Conc. D.I.
Exist. Highway Boundary
Pole 54
Wood G.P.s
Gravel Drive
Exist. Highway Boundary
Anchor Boundary
NET 532
NET 531
P.C. 170+71.74
Overhead Power
MAY HULTEN
Gravel Dr.
GMP
CGR
OHW
NEW ENGLAND POWER CO.
CHARLENE HULTEN
DEERFIELD RIVER
P.T. 161+44.93
P.C. 156+65.82
STA. 158+70 CL. REMOVE EXISTING 24" RCP
STA. 163+65 CL. NEW 30"x86' PCCSP(.01) .079 OR CAAP .075 w/ DITCH @ INLET
APPROX. AERIAL RELOC. ROUTE BY GMP, NE&S, NET, HYPERION
STA. 167+65 CL. EXISTING 15" RCP (REMOVE)
STA. 168+00 CL. NEW 30"x80' PCCSP .079 OR CAAP .075 w/ CSPES OR CAAPES @ INLET & STONE FILL TYPE I, OUTLET
STA. 171+70 CL. REMOVE EXIST. 18" R.C.P.
CURVE DATA 6
Δ = 19°09'51.0" RT.
D = 4°00'00"
R = 1432.40'
T = 241.81'
L = 479.11'
E = 20.27'
Bank = 0.063'/1
DRILLING AND BLASTING SOLID ROCK SUBGRADE 160+00-164+50
STEEL BEAM GUARD RAIL 156+50-170+55 RT.
PLAN
0 50 100
Scale Feet
P.V.I. 172+50
ELEV. = 1565.00
L.V.C. = 500'
E = -0.63'
S.S.D. = 914'
-1.0000%
6" UNDERDRAIN
LEGEND
= ORDINARY HIGH WATER
1580
1560
1540
1520
1550
1530
0 50 100
PROFILE SCALE IN FEET
156+50
157
158
159
160
161
162
163
164
165
166
167
168
169
170
171
172
SEARSBURG — WILMINGTON
NHF 010 — 1 (18)
MAINLINE
SHEET 294 OF 435
PLAN
PROFILE
K+E PLATE 1, PLAN-PROFILE KEUFFEL & ESSER CO.
48 7024 MADE IN U.S.A.

THIS SHEET IS FOR WETLANDS AND RARE AND ENDANGERED SPECIES ONLY

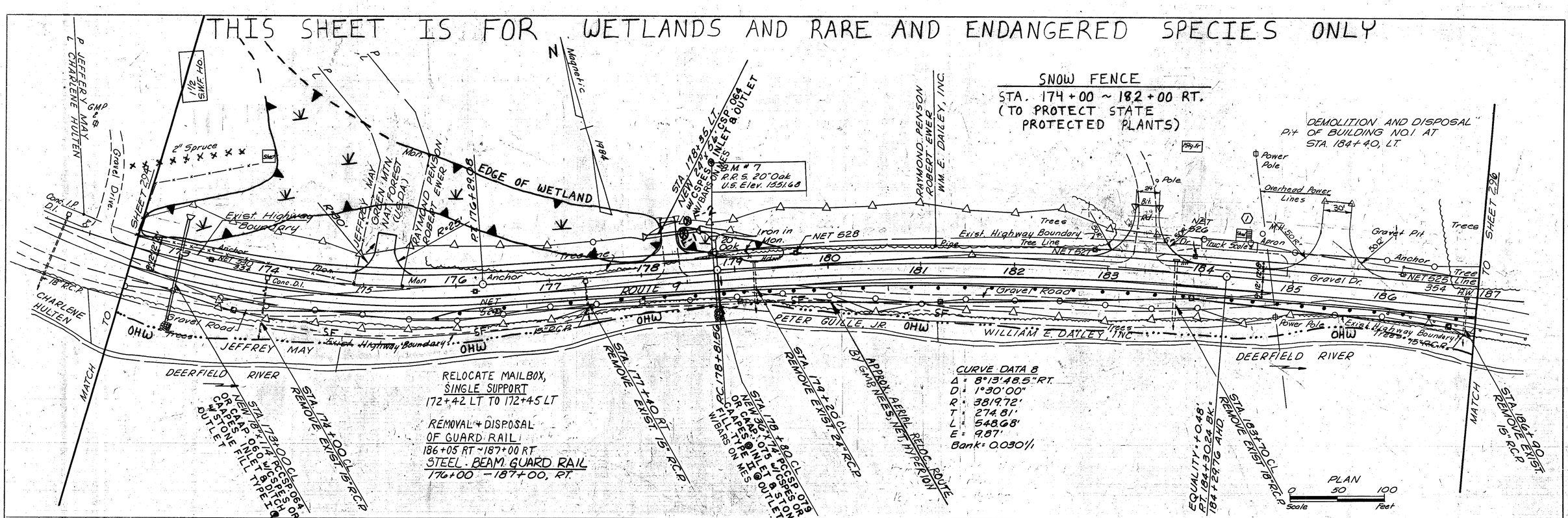

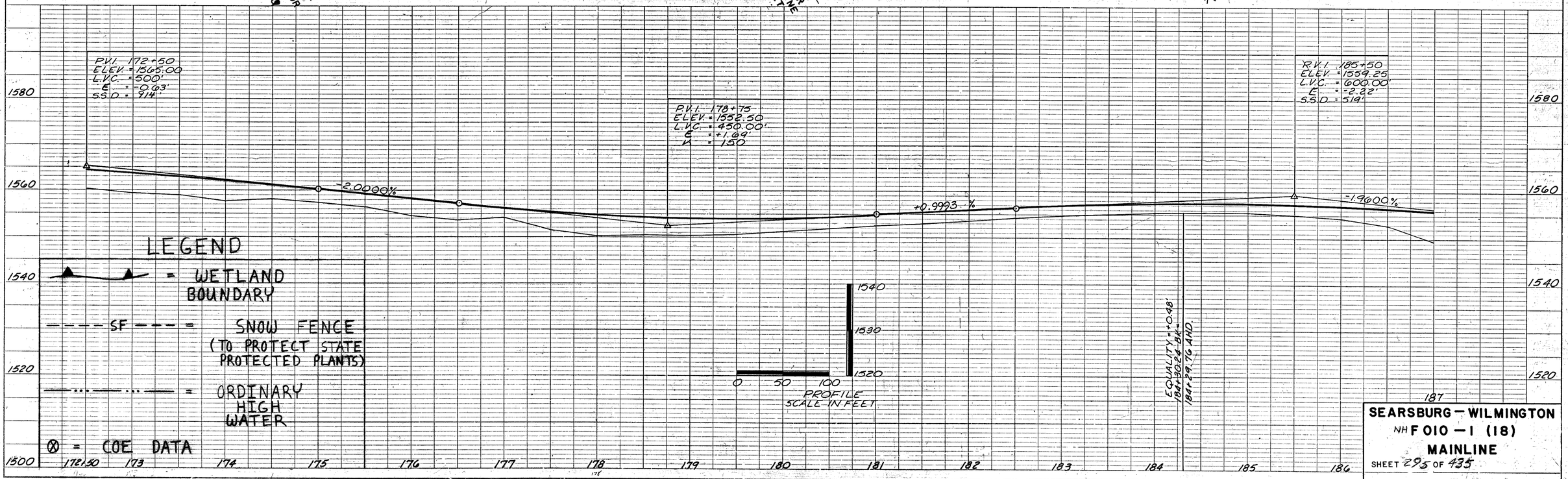

LEGEND

- WETLAND BOUNDARY
- SF — SF — = SNOW FENCE (TO PROTECT STATE PROTECTED PLANTS)
- ORDINARY HIGH WATER
- ⊗ = COE DATA

SEARSBURG — WILMINGTON
NH F 010 — 1 (18)
MAINLINE
SHEET 295 OF 435

PLAN — SURVEYED, PLOTTED, NOTE BOOK, AUGMENT CHECKED, No., BY, DATE

PROFILE — SURVEYED, PLOTTED, NOTE BOOK, GRADES CHECKED, No., STRUCTURE NOTATIONS CHECKED, BY, DATE

THIS SHEET IS FOR WETLANDS AND RARE AND ENDANGERED SPECIES ONLY

CONSTRUCT DRIVE
192+45, LT. (GRAVEL) 12' W
195+42, LT. (GRAVEL) 16' W
198+35, LT. (GRAVEL 12' W)

TO SHEET 295

WM. E DAILEY, INC.
PETER GUILLE, JR.

Magnetic 1984

PC 189+63.37

Trees
Conc. Footers
Gravel Drive
NET 524
Anchor
Pipe
Am in Conc.
Exist. Highway Boundary
C.B. #4
WILLIAM E. DAILEY INC.
OHW
DEERFIELD RIVER
Exist. Highway Boundary
ROUTE 9
18"
CGP
NET 623
PETER GUILLE, JR.
Trees
Tie in Mon.
Sign
Stone Wall
NET 522
Telephone Pole
NET 97X
97KK
W.L. Transformer
OHW
Trees
Pipe
EDGE WETLAND
NET 521
W/Service Pole
Trees
Pipe
DONALD M. TOWNE
ROY E. UNDERWOOD
Existing Highway Boundary
OHW
DEERFIELD RIVER

PT 195+16.87

STA. 194+33 RT.
REMOVE EXIST. 18" R.C.P.

STA. 195+00 C.L.
NEW 78" x 24" PCCSP .064 OR CAAP .060 w/ CSSES OR CAAPES
@ INLET & DITCH w/ SSES OR CAAPES
TYPE I @ OUTLET
STONE FILL

PETER GUILLE, JR.
DONALD M. TOWNE
ROY E. UNDERWOOD

Power Pole
8" Maple
Gravel Drive
Clump of 5" White Birch
Overhead Power
6" White Birch
Wood Posts
Trees
Pipe
Exist. Highway Boundary
Brush & Trees
Shrubs
Tree Line
Anchor
Conc. Mon.
Pt. 1936
FAP 10(6)
County Line Sign
Existing Highway Boundary
OHW

POT 200+48.35
BENNINGTON COUNTY
TOWN OF SEARSBURG
WINDHAM COUNTY

MATCH TO SHEET 297

POT 188+37.31

STA. 190+43 RT.
REMOVE EXIST. 15" R.C.P.

SCARIFYING PAVEMENT
188+00 TO 190+50
192+50 TO 198+00

B.M. # 8
R.R. S. 18" Oak
U.S. Elev. 1537.01

REMOVAL + DISPOSAL OF GUARD RAIL
187+00 RT ~ 194+00 RT

APPROX. AERIAL RELOC. ROUTE 9 NET, HYPERION BY GMP, NEES

STEEL BEAM GUARD RAIL
187+00 - 187+75 RT.

RELOCATE MAILBOX, SINGLE SUPPORT
198+45 LT. TO 198+43 LT.

PLAN
0 50 100
Scale Feet

1580
1560
1540
1520
1500

P.V.I. 199+50
ELEV. = 1531.81
L.V.C. = 800'
E = +1.44'
K = 556

-1.9600%
-0.5200%

PROFILE
SCALE IN FEET
0 50 100
1530
1520
1510

LEGEND
= WETLAND BOUNDARY
= ORDINARY HIGH WATER

187 188 189 190 191 192 193 194 195 196 197 198 199 200 201 202

SEARSBURG — WILMINGTON
NH F 010 — 1 (18)
MAINLINE
SHEET 296 OF 435

PLAN: SURVEYED, PLOTTED, GRADES CHECKED, R.C. & P. CHECKED, No. ___, DATE, BY
PROFILE: SURVEYED, PLOTTED, GRADES CHECKED, R.C. & P. CHECKED, NOTE BOOK, No. ___, STRUCTURE NOTATIONS CHECKED, DATE, BY

THIS SHEET IS FOR WETLANDS AND RARE AND ENDANGERED SPECIES ONLY

PLAN — SURVEYED, PLOTTED, NOTE BOOK, ALIGNMENT CHECKED, LAST REVISION CHECKED, No., STRUCTURE NOTATIONS CHECKED, BY, DATE

PROFILE — SURVEYED, PLOTTED, GRADES CHECKED, LAST REVISION CHECKED, No., STRUCTURE NOTATIONS CHECKED, BY, DATE

Magnetic 1984

STA. 203+00 TO STA. 204+00 LT. SPECIAL DITCH

P. PETER GUILLE, JR. — DONALD M. TOWNE — ROY E. UNDERWOOD — HEATHER BROOK

EDGE OF WETLAND

Brush & Trees

EDGE OF WETLAND

I-2 I-1 H-2 H-1

MATCH TO SHEET 216

Stone H.W.

Exist. Highway Boundary

15" R.C.P.

Gravel Road

Anchor

DONALD M. TOWNE — ROY E. UNDERWOOD

Trees

Net 520

OHW

P.C. 205+82.23

Exist. Highway Boundary

DEERFIELD RIVER

STA. 203+22, RT.
REMOVE EXIST. 15" R.C.P.

STA. 207+14, SKEW Δ 58°RT.
NEW 11'-0" X 7'-0" X 102' CONC. 9"x12" Corr. CAAP PAL 125 CR
CRADLES AT BOTH ENDS.
SEE DRAINAGE DETAIL SHEET NO. 6

NEW OUTLET DITCH W/ STONE FILL TYPE II TO MEET EXIST. CREEK.

STA. 207+50, RT.
REMOVE EXIST. 10'X5' CONC. CULV.

24" Stone Culvert

B.M. # 9
R.P.S. 20" Maple
U.S. Elev. 1526.22

Boulder

Gravel Drive

Ditch

208 — 209 — 20" Maple — 10'x5' Conc. Culv.

207 — 206 — 206 — 204 — 203

Net 517

OHW

PETER GUILLE, JR.

STA. 210+00, SKEW Δ 73° RT.
NEW 54"x84" PCCSP. 109 OR CAAP
105° STONE FILL TYPE II @ OUTLET
& INLET

APPROX. AERIAL RELOC. ROUTE 9 BY GM&S, NEES, NET, HYPERION

CURVE DATA 10
Δ = 29°38'27.0" RT.
D = 5°00'00"
R = 1145.92'
T = 303.20'
L = 592.82'
E = 39.43'
Bank = 0.071'/'

DRIVEWAY DITCH

R=20 R=30

S.R.

DRILLING AND BLASTING OF SOLID ROCK SUBGRADE
211+75 – 215+75

REMOVING AND RESETTING FENCE
211+00±, LT. TO 220+50±, LT.

CMP 114

Tree Line

30" C.M.P.

211 — 212 — 213

C.B.

18" C.M.P.

ROUTE 9 214

S.R. — S.R. — S.R.

P.C. 214+15.31

PETER GUILLE, JR. — VIOLA B. MORSE

STA. 215+00 CL. NEW 18'X 88' PCCSP. 064 OR CAAP. 060

STA. 215+75, LT. TO RT. NEW 6'X 4' UNDERDRAIN W/ FB L.T.

B.M. # 10
R.P.S. 28" Ash
U.S. Elev. 1521.03

MATCH TO SHEET 216

Exist. Highway Boundary

Net 519 354

OHW

CCR

Trees

Sign

216 — 217 — 218

VIOLA B. MORSE

DEERFIELD RIVER

R.T. 211+75.06

STA. 212+60 CL. NEW 18'X 64' PCCSP. 064 OR CAAP. 060

STA. 212+60 CL. REMOVE EXIST. 18" C.M.P.

Overhead Power Lines

REMOVAL AND DISPOSAL OF GUARD RAIL
207+13, RT. – 207+83, RT.
207+18, RT. – 207+88, RT.
211+24, RT. – 216+87, RT.

STEEL BEAM GUARD RAIL
206+00 – 209+00, LT.
205+82 – 217+00, RT.

PLAN
0 50 100
Scale Feet

LEGEND

= WETLAND BOUNDARY

= ORDINARY HIGH WATER

⊗ = COE DATA

1560 / 1540 / 1520 / 1500 / 1480

202 203 204 205 206 207 208 209 210 211 212 213 214 215

-0.5200%

P.V.I. 213+25
ELEV. = 1524.66
L.V.C. = 400'
E = +0.45'
SS.D. = 938

-1.4200%

6" UNDERDRAIN

1510 / 1500 / 1490

0 50 100
PROFILE SCALE IN FEET

216 217

SEARSBURG — WILMINGTON
NH F 010 — 1 (18)
MAINLINE
SHEET 297 OF 435

PLATE 1, PLAN-PROFILE
KEUFFEL & ESSER CO.
48 7024 MADE IN U.S.A.

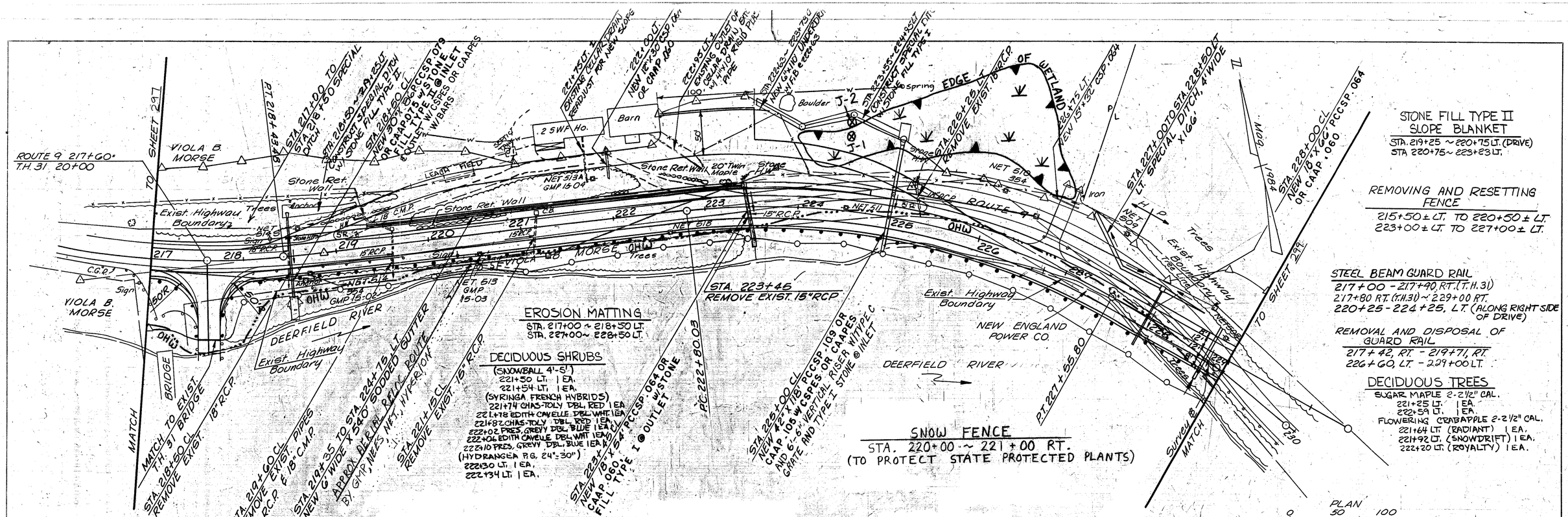

THIS SHEET IS FOR WETLANDS AND RARE AND ENDANGERED SPECIES ONLY

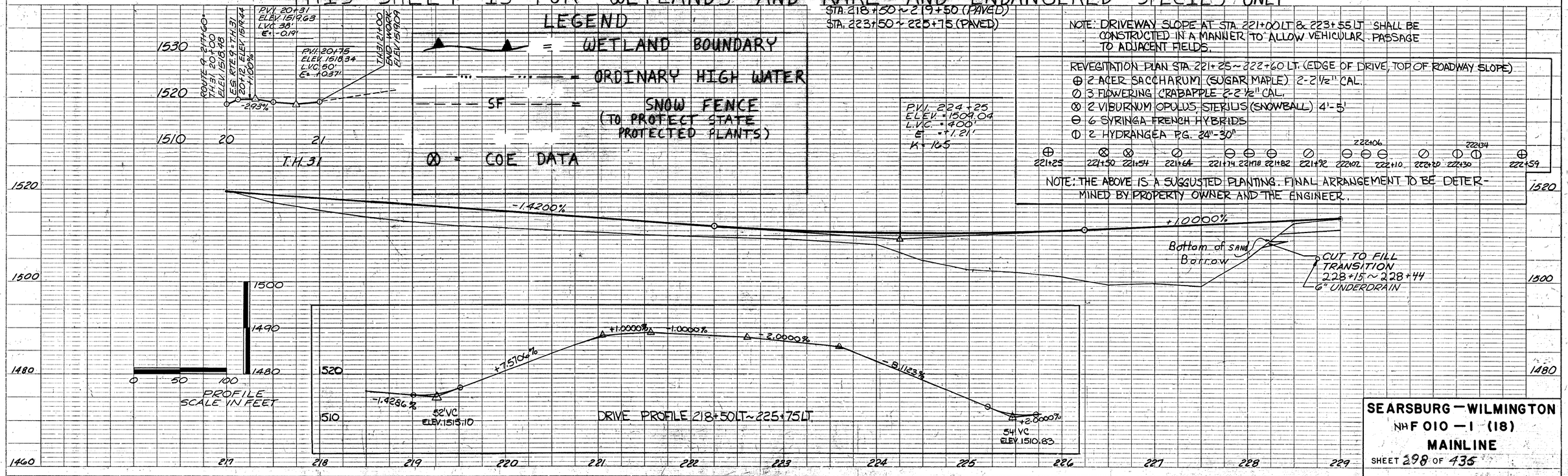

SEARSBURG — WILMINGTON
NH F 010 — 1 (18)
MAINLINE
SHEET 298 OF 435

K&E PLATE 1, PLAN-PROFILE
KEUFFEL & ESSER CO.
48 7024 MADE IN U.S.A.

THIS SHEET IS FOR WETLANDS AND RARE AND ENDANGERED SPECIES ONLY

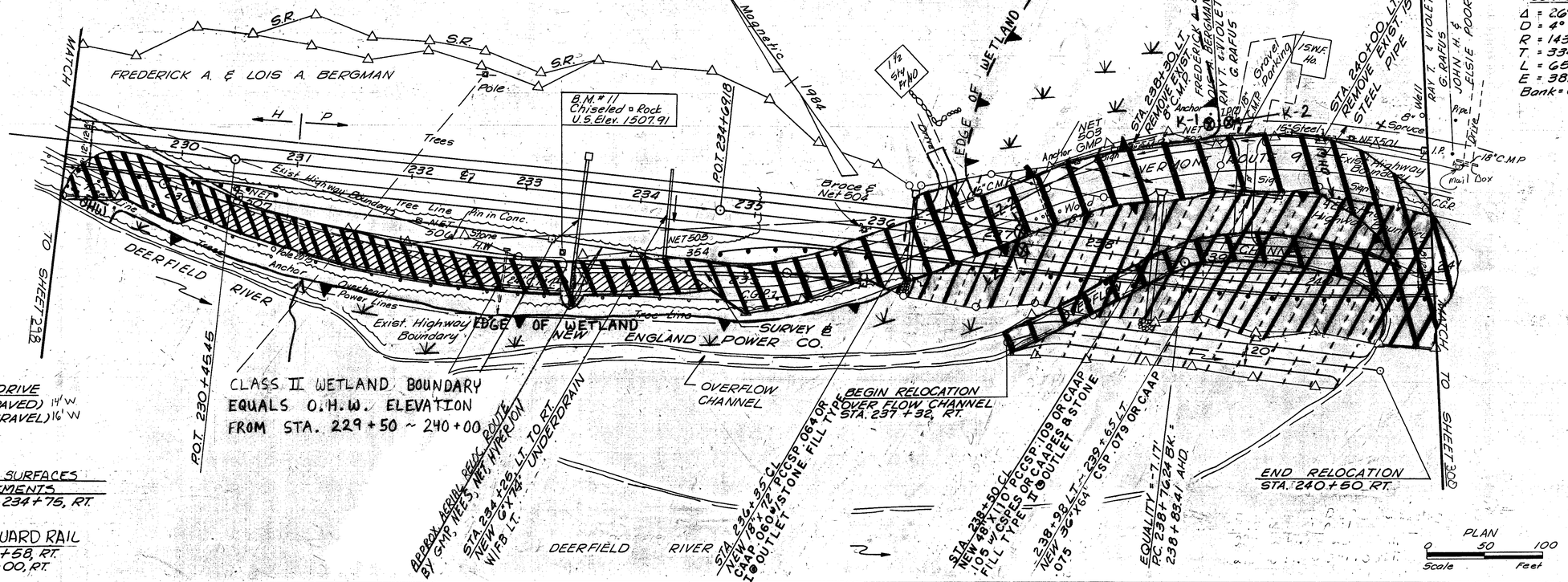

CURVE DATA 13
Δ = 26°15'47.4" LT.
D = 4°00'00"
R = 1432.40'
T = 334.16'
L = 656.58'
E = 38.46'
Bank = 0.063'/'

CONSTRUCT DRIVE
236+62, LT. (PAVED) 14' W
239+29, LT. (GRAVEL) 16' W

EXCAVATION OF SURFACES AND PAVEMENTS
230+15, RT. TO 234+75, RT.

STEEL BEAM GUARD RAIL
229+00 – 230+58, RT.
235+00 – 241+00, RT.

PLAN
SURVEYED: DATE:
PLOTTED: BY:
NOTE BOOK: ALIGNMENT CHECKED:
No.: P.I. OF MAP CHECKED:
STRUCTURE NOTATIONS CHECKED:

LEGEND

= WETLAND BOUNDARY

= ORDINARY HIGH WATER

⊗ = COE DATA

= CLASS II WETLAND BUFFER IMPACT

= AREAS OF FILL BELOW OHW, REGULATED BY THE COE

= IMPACTED CLASS II WETLAND NOT REGULATED BY COE SINCE IT IS BELOW OHW

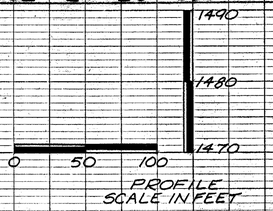

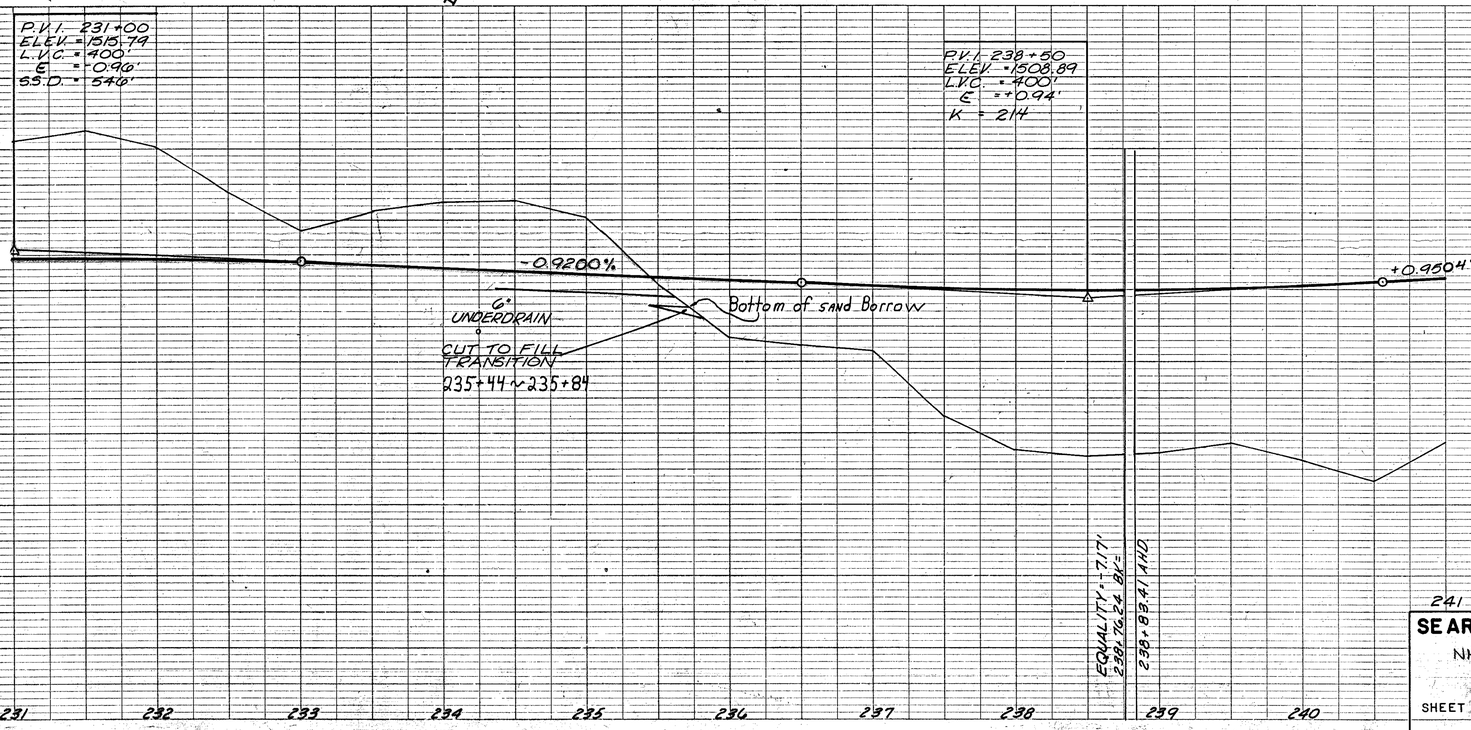

PROFILE
SURVEYED: DATE:
PLOTTED: BY:
NOTE BOOK: GRADES CHECKED:
No.: STRUCTURE NOTATIONS CHECKED:

241

SEARSBURG – WILMINGTON
NH F 010 – 1 (18)
MAINLINE
SHEET 298 OF 435

K&E PLATE 1, PLAN-PROFILE
KEUFFEL & ESSER CO.
48 7024 MADE IN U.S.A.

NONE

THIS SHEET IS FOR WETLANDS AND RARE AND ENDANGERED SPECIES ONLY

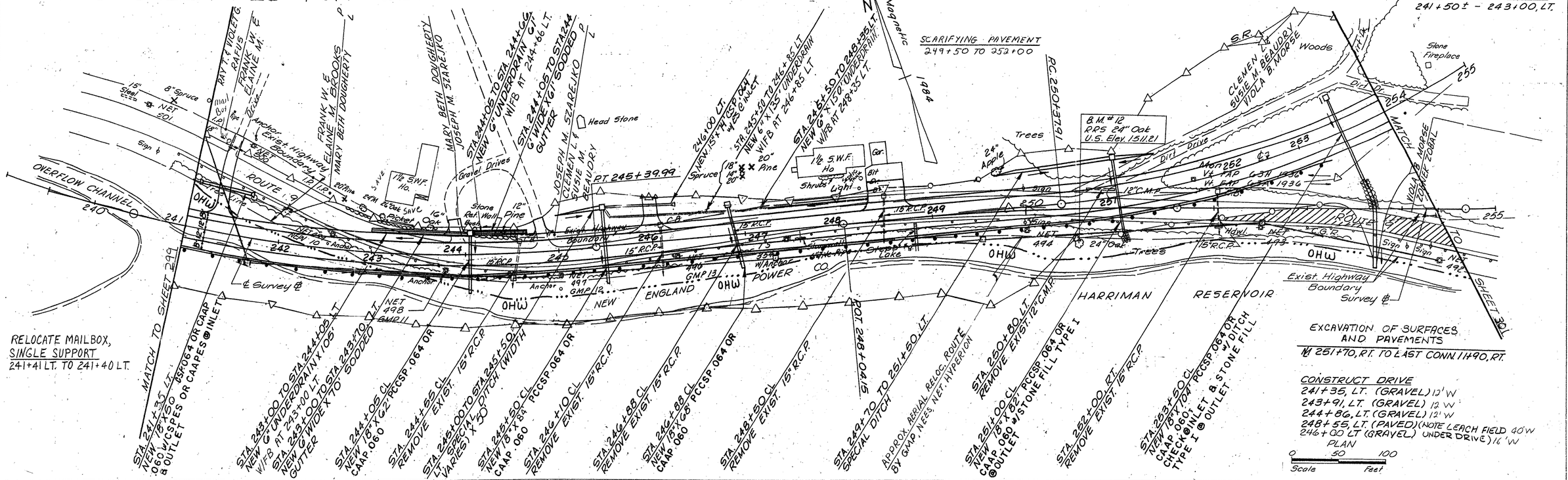
EROSION MATTING
241+50± - 243+00, LT.
SCARIFYING PAVEMENT
249+50 TO 252+00
RELOCATE MAILBOX, SINGLE SUPPORT
241+41 LT. TO 241+40 LT.
MATCH TO SHEET 299
MATCH TO SHEET 301
OVERFLOW CHANNEL
ROUTE 9
Survey ℄
Exist. Highway Boundary
OHW
GMP 13
GMP 14
ENGLAND
NEW
POWER CO.
HARRIMAN
RESERVOIR
Stone Fireplace
Woods
Trees
Lake
Stream
Dirt Dr.
Drive
Gravel Drives
Stone Retaining Wall
Head Stone
Shrubs
Light
Sign
Hdwl.
Anchor
Guy
Gar.
Bit
Dirt
Brook
Marsh
Pipe
Fence
Steel
Spruce
Pine
Oak
Apple
Ash
Maple
Birch
Hemlock
Elm
Willow
Cedar
Poplar
Chestnut
Hickory
Beech
Tulip
Locust
Walnut
Basswood
Dogwood
Sycamore
Butternut
Mulberry
Hackberry
Persimmon
Buckeye
Cucumber
Magnolia
Sassafras
Blackgum
Redbud
Holly
Hornbeam
Ironwood
Serviceberry
Witch Hazel
Elderberry
Viburnum
Sumac
Alder
Aspen
Basswood
Beech
Birch
Cherry
Chestnut
Cottonwood
Dogwood
Elm
Hackberry
Hickory
Hornbeam
Ironwood
Locust
Maple
Oak
Pine
Poplar
Redbud
Sassafras
Sycamore
Tulip
Walnut
Willow
Yellow Poplar
Spruce
Fir
Hemlock
Juniper
Larch
Pine
Redwood
Spruce
Tamarack
Yew
Arborvitae
Cedar
Cypress
Douglas Fir

THIS SHEET IS FOR WETLANDS AND RARE AND ENDANGERED SPECIES ONLY

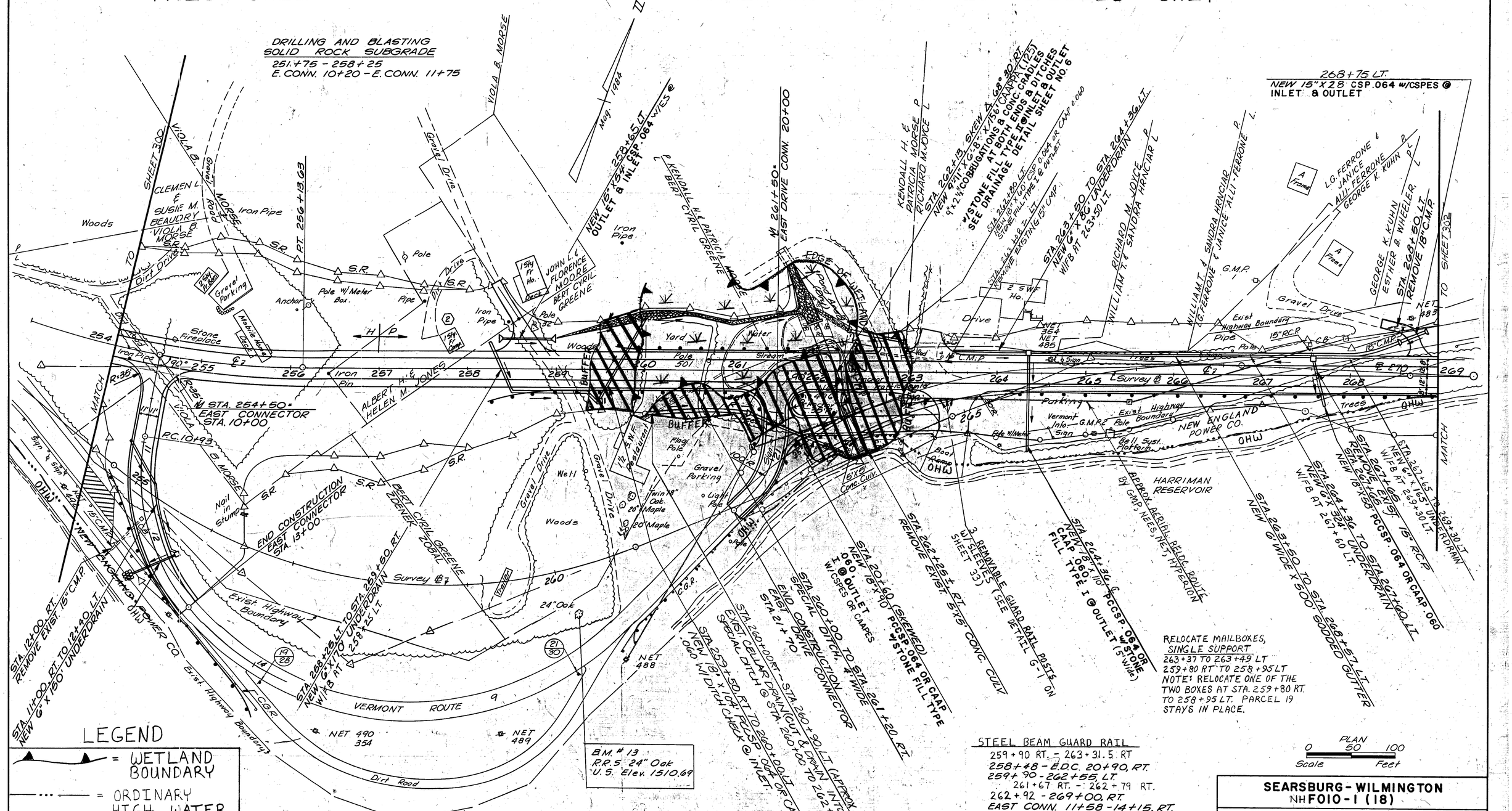

LEGEND

- = WETLAND BOUNDARY
- = ORDINARY HIGH WATER
- ⊗ = COE DATA
- = CLASS II WETLAND BUFFER IMPACT

EXCAVATION OF SURFACES AND PAVEMENTS
℄ 251+70, RT. TO EAST CONN. 11+90, RT.

CONSTRUCT DRIVE
258+65, LT. (GRAVEL) 12' W
262+80, LT. (GRAVEL) 20' W
263+24, LT. (GRAVEL) 22' W
263+50, RT. (GRAVEL) 30' W
268+75, LT. (GRAVEL) 12' W
261+67 64' RT TO 263+35 59' RT (GRAVEL) 18' W

STEEL BEAM GUARD RAIL
259+90 RT. - 263+31.5 RT
258+48 - E.D.C. 20+90, RT.
259+90 - 262+55, LT.
261+67 RT. - 262+79 RT.
262+92 - 269+00, RT.
EAST CONN. 11+58 - 14+15, RT.

REMOVAL AND DISPOSAL OF GUARD RAIL
261+80 RT. - 263+00, RT.
261+80, RT. - 262+60, RT.
254+00 RT - E. CONN. 14+40 RT.

SEARSBURG - WILMINGTON
NH F010-1 (18)

MAINLINE

McFARLAND-JOHNSON ENGINEERS, INC.
BINGHAMTON NEW YORK

SCALE	DATE	SHEET
AS NOTED		301 OF 435

IN CHARGE OF: DESIGNED BY: DETAILED BY: CHECKED BY: NAME DATE

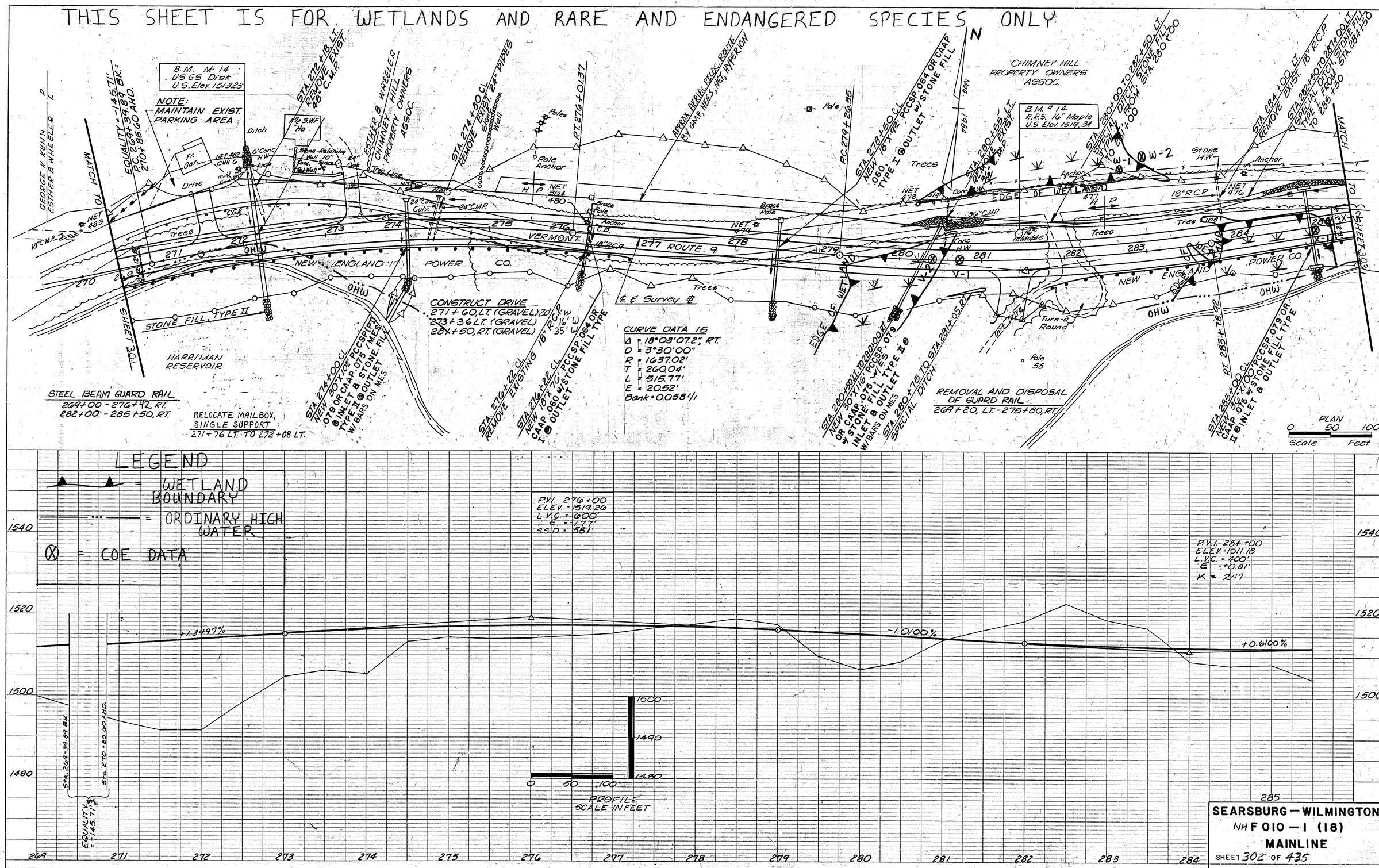

PLAN
NOTE BOOK
No.
SURVEYED
PLOTTED
ALIGNMENT CHECKED
RT. OF WAY CHECKED
BY
DATE

PROFILE
NOTE BOOK
No.
SURVEYED
PLOTTED
GRADES CHECKED
B. M. & NOTES
STRUCTURE NOTATIONS CHECKED
BY
DATE

K+E PLATE 1, PLAN-PROFILE
KEUFFEL & ESSER CO.
48 7024 MADE IN U.S.A.

EROSION MATTING
285+50 - 288+00, LT.
290+75 - 292+00, LT.

CHIMNEY HILL PROPERTY OWNERS ASSOC.

MATCH SHEET 304

Trees

APPROX. PERIM. RELOC. ROUTE 9 BY G.M.P. NET, HYPERBOLA

GREEN MOUNTAIN POWER CORPORATION SUBSTATION NO.36

B.M. # 15
R.R.S. Pole
U.S. Elev. 1516.43

CONSTRUCT DRIVE
290+50, LT. (GRAVEL 24' WIDE)

℄ P.I.
STA. 290+89.87

Anchors
NET 476
NET 475
354
NET 474
NET 479
Mon.
Gate
18" C.M.P.
Mon.
Anchor
In Tree
NET 472
Stone H.W.
294

18" R.C.P.
Stone A.W.
15" R.C.P.
Stone H.W.
290
VERMONT ROUTE 9
15" R.C.P.

Tree Line
287
288
289
G.M.P. 47
Anchors
Trees
Tree Line
G.M.P. 46
C.G.R.

285
286
EDGE OF WATER
OHW
NEW ENGLAND POWER CO.

STA. 285+90 LT.
REMOVE EXIST. 18" R.C.P.

STA. 288+21 CL
REMOVE EXIST. 15" R.C.P.

STA. 289+28, SKEW X 55° LT.
NEW 24" x 66" PCCSP.064 OR CAAP .060 W/STONE FILL TYPE II @ OUTLET

STA. 290+30 —
REMOVE EXIST. STONE FILL

STA. 290+54 LT.
NEW 18" x 58" CSP.064 OR CAAP.060 W/ES @ INLET & OUTLET

RIVER

291+00
END PROJECT FOIO-1(18)
BEGIN APPROACH

292+50
END APPROACH

STEEL BEAM GUARD RAIL
285+50 - 290+50, RT.

REMOVAL AND DISPOSAL OF GUARD RAIL
287+90, RT. - 290+95, RT.

PLAN
0 50 100
Scale Feet

THIS SHEET IS FOR WETLANDS AND RARE AND ENDANGERED SPECIES ONLY

P.V.I. 289+00
ELEV. = 1514.23
L.V.C. = 200'
E = 0.18'
S.S.D. = 1036

+0.6100%
-0.1000%
+1.5733%

END PROJECT FOIO-1(18)
STA. 291+00 BEGIN APPROACH

STA. 292+50
END APPROACH

P.V.I. 291+00
Elev. 1514.03
L.V.C. 200'
E +0.42
K 120

1540
1520
1500
1490
1480

0 50 100
PROFILE
SCALE IN FEET

285 286 287 288 289 290 291 292 293 294

LEGEND

= WETLAND BOUNDARY

= ORDINARY HIGH WATER

⊗ = COE DATA

SEARSBURG — WILMINGTON
NHF 010 — 1 (18)
MAINLINE
SHEET 303 OF 435

K&E PLATE 1, PLAN-PROFILE
KEUFFEL & ESSER CO.
48 7024 MADE IN U.S.A.

THIS SHEET IS FOR EROSION CONTROL USE ONLY

CABLE GUARD RAIL
96+50 LT - 110+00 LT
TERMINATE AT 110+00 BY BURYING IT IN BERM.

REMOVAL AND DISPOSAL OF GUARD RAIL
105+64 LT - 107+94 LT
108+90 LT - 109+77 LT

CONSTRUCT DRIVE
98+94 RT (PAVED)

RELOCATE MAILBOX, SINGLE SUPPORT
98+89 LT - 99+00 LT

N MAGNETIC

LANDSCAPING ITEMS FOR MR. ZUCKER'S PROPERTY

(PLANTING LOCATION TO BE DETERMINED BY PROPERTY OWNER AND RESIDENT ENGINEER)
ONE 1½'' CORTLAND APPLE TREE (SEMI-DWARF)
ONE 1½'' MCINTOSH APPLE TREE (SEMI-DWARF)
ONE 7 GAL. LIBERTY APPLE TREE (SEMI-DWARF)
ONE 7 GAL. RED DELICIOUS APPLE TREE (SEMI-DWARF)
ONE 4 IN 1 APPLE TREE (SEMI-DWARF)
(CORTLAND, LODI, MCINTOSH AND SUMMER RED)
FOUR 6-7' PICEA GLAUCA (EVERGREEN TREES)

HAY BALE

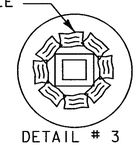

DETAIL # 3
THIS DETAIL SHALL BE USED AT ALL DROP INLET LOCATIONS

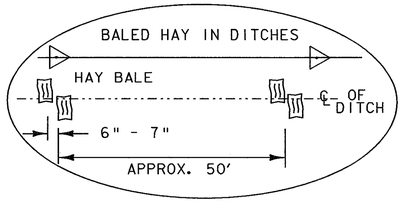

BALED HAY IN DITCHES
101+00 RT - 110+00 RT

GENERAL NOTES
1. EROSION CONTROL MATERIALS WILL BE PLACED AS ILLUSTRATED ON NEWLY CONSTRUCTED AREAS AS SOON AS POSSIBLE.
2. DURING CONSTRUCTION EVERY EFFORT WILL BE MADE TO KEEP DEBRIS AND SEDIMENT OUT OF THE DITCH. HAY BALES WILL BE USED AS ILLUSTRATED TO INSURE BANK STABILITY.
3. THE HAY BALES SHALL BE INSPECTED AND CLEANED AS NEEDED.

(S-F) DENOTES GEOTEXTILE FOR SILT FN. & HAY BALES.
GEOTEXTILE FOR SILT FENCE & HAY BALES
96+50 LT. ~ 107+50 LT

EXISTING CURVE DATA
△ = 13°-05' RT
D = 1°
R = 5729.58'
T = 657.02'
L = 1308.33'
E = 37.55'
BANK: 0.021 FT./FT.

ML STA. 96+50
BEGIN PROJECT
NHF 010-1(18)

POST 96+00

STA. 98+43 L.T.-98+70 RT. NEW (18"X 84" CPEP (.060) CLASS III W/STONE FILL, TYPE 1, AT OUTLET

STA. 98+41 C.L. EXIST. 15" RCP REMOVE

STA. 102+96 C.L. EXIST. 30" RCP REPLACE WITH NEW 30" X 72" PCCSP (.079), CAAP (.075), CPEP OR RCP, CLASS III, W/DITCH CHECK RT. & STONE FILL, TYPE 11, AT OUTLET

STA. 102+50 RT-102+80 RT. NEW 30" X 44" PCCSP (.079), CPEP OR RCP, CLASS III W/STONE FILL, TYPE 11, AT INLET

STA. 105+52 C.L. NEW 18"X 92' CPEP (.060) CLASS III W/STONE FILL, TYPE 1, AT OUTLET

STA. 106+00 RT REMOVE EXIST. CATCH BASIN

REMOVE EXIST. CATCH BASIN

PI 107+50.49 = 107+48.20

STA. 107+75 C.L. EXIST. 15" RCP (LT. OF C.L.) REPLACE WITH NEW 30" X 84" PCCSP (.079) CAAP (.075) CPEP (SL) OR RCP, CLASS III, W/DITCH CHECK RT & STONE FILL, TYPE 11, AT OUTLET

STA. 110+00 MATCH LINE SURV.

BM #1
R.R.S. 18" PINE
U.S. ELEV. 1668.77'

BM #2
R.R.S. 12" MAPLE
ELEV. 1658.51'

PT 100+15.50

PC 104+44.74

S9°59'59.41"E

S2°11'03.00"W

GRAVEL AREA

1½ STY HOUSE

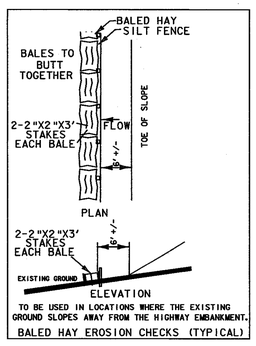

TO BE USED IN LOCATIONS WHERE THE EXISTING GROUND SLOPES AWAY FROM THE HIGHWAY EMBANKMENT.
BALED HAY EROSION CHECKS (TYPICAL)

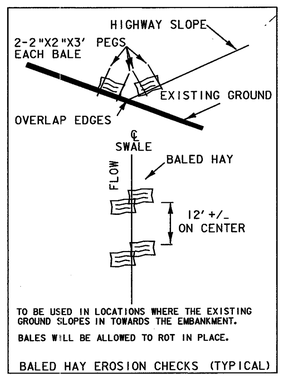

TO BE USED IN LOCATIONS WHERE THE EXISTING GROUND SLOPES IN TOWARDS THE EMBANKMENT.
BALES WILL BE ALLOWED TO ROT IN PLACE.
BALED HAY EROSION CHECKS (TYPICAL)

NOTE: PROPOSED CENTERLINE FROM 96+50 TO 100+15.5 SHALL FOLLOW THE CENTERLINE OF THE EXISTING PAVEMENT.

6'' UNDERDRAIN
① 97+00 RT-102+90 RT
NEW 6'' X 590' UNDERDRAIN
W/FB @ 97+00 RT & 99+50 RT

② 103+00 RT-105+52 RT
NEW 6'' X 252' UNDERDRAIN
W/FB @ 103+00 RT

③ 105+54 RT-107+75 RT
NEW 6'' X 221' UNDERDRAIN
W/FB @ 105+54 RT

④ 107+77 RT-110+20 RT
NEW 6'' X 221' UNDERDRAIN
W/FB @ 107+77 RT

CURVE DATA
△ = 12°-11'-02.5'' RT
D = 2°
R = 2864.79'
T = 305.75'
L = 609.20'
E = 16.27'
BANK: 0.038 FT./FT.

0 50 100
SCALE IN FEET

PROJECT NAME: SEARSBURG - WILMINGTON
PROJECT NUMBER: NHF 010-1(18)

PLOT FILE NAME: dd096hbl.i
PROJECT LEADER: DELLA SANTA
DESIGN FILE: 78D096/DESIGN/DD096CNUI.DGN
PLOT DATE: 13-DEC-2001
DRAWN BY: SQUAD B

THIS SHEET IS FOR EROSION CONTROL USE ONLY

CONSTRUCT DRIVE
110+47 RT (GRAVEL)

TREATED TIMBER CURB
REV. 113+00 LT-REV. 118+61 LT.
REV. 121+09 LT-REV. 124+83 LT.

STEEL BEAM GUARD RAIL
110+75 LT - 118+00 LT
BURY THE BEGINNING IN BERM (NO TERMINAL)
121+09 LT - 125+00 LT
113+25 RT - 118+86.50 RT
121+63.50 RT - 125+00 RT

GUARD RAIL APPROACH SECTION, NETC 2 RAIL (MOD.)
118+00 LT - 118+25 LT
121+04 LT -121+29 LT
118+86.50 RT - 119+11.50 RT
121+38.50 RT - 121+63.50 RT

BRIDGE RAIL-NETC 2 RAIL
118+25 LT - 121+04 LT
119+11.50 RT - 121+38.50 RT

CURVE DATA
Δ= 41°-45'-47.87'' LT
D = 4°-30'
R = 1273.24'
T = 485.74'
L = 928.07'
E = 89.51'
BANK: 0.067 FT./FT.

REMOVAL & DISPOSAL OF GUARD RAIL
110+90 LT - 115+85 LT
115+36 RT - 115+88 RT
116+13 LT - 118+29 LT
116+16 RT - 118+44 LT
120+12 LT - 124+07 LT

N MAGNETIC

(S-F) DENOTES GEOTEXTILE FOR SILT FN. & HAY BALES.

GEOTEXTILE FOR SILT FENCE & HAY BALES
110+00 LT. ~ 113+35 LT
116+71 LT. ~ 117+50 LT
114+50 RT. ~ 116+15 RT
116+43 RT. ~ 119+50 RT
121+65 RT. ~ 125+00 RT

GENERAL NOTES

1. EROSION CONTROL MATERIALS WILL BE PLACED AS ILLUSTRATED ON NEWLY CONSTRUCTED AREAS AS SOON AS POSSIBLE.
2. DURING CONSTRUCTION EVERY EFFORT WILL BE MADE TO KEEP DEBRIS AND SEDIMENT OUT OF THE DITCH. HAY BALES WILL BE USED AS ILLUSTRATED TO INSURE BANK STABILITY.
3. THE HAY BALES SHALL BE INSPECTED AND CLEANED AS NEEDED.

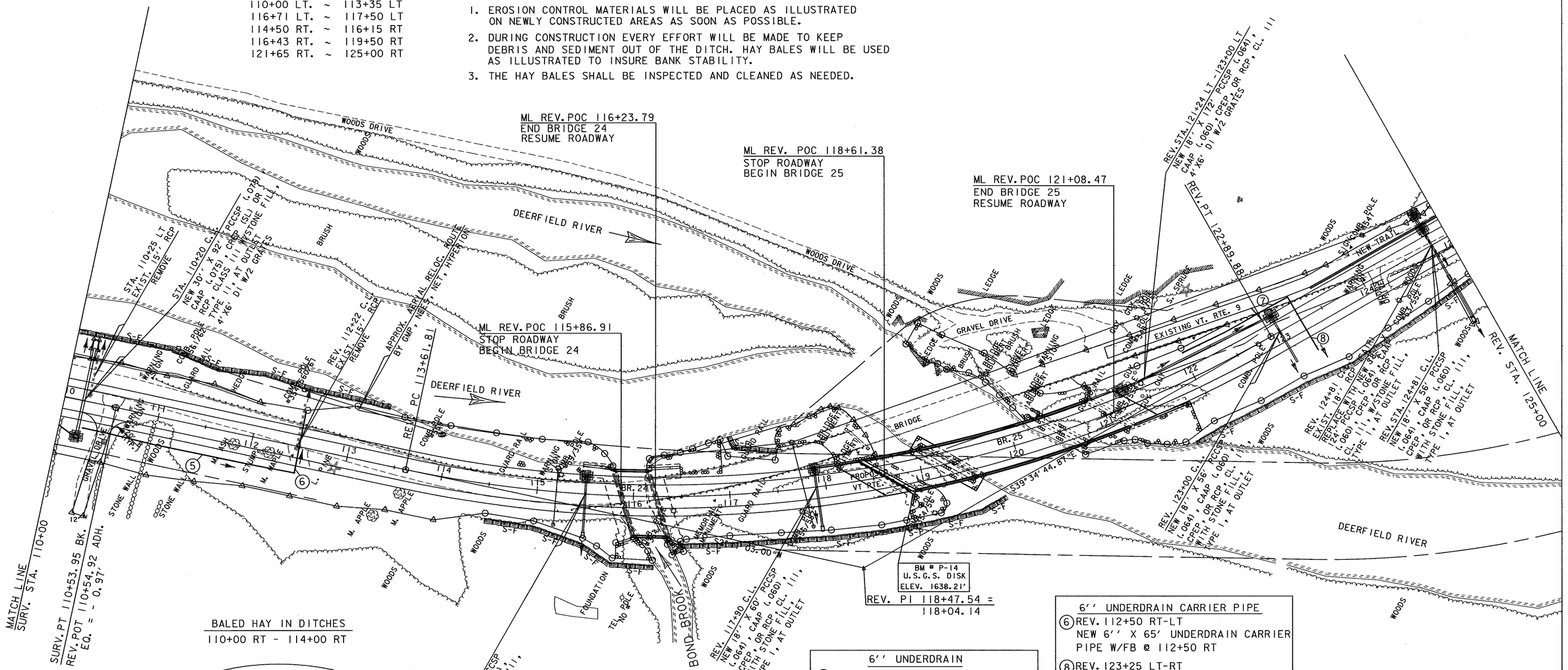

BALED HAY IN DITCHES
110+00 RT - 114+00 RT

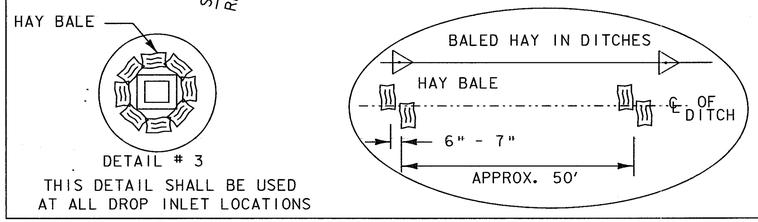

6'' UNDERDRAIN
⑤ SURV. 110+25 RT- REV. 112+50 RT
NEW 6'' X 224' UNDERDRAIN W/FB @ 110+25 RT
⑦ REV. 122+00 LT- REV. 123+25 LT
NEW 6'' X 125' UNDERDRAIN W/FB @ 122+00 LT

6'' UNDERDRAIN CARRIER PIPE
⑥ REV. 112+50 RT-LT
NEW 6'' X 65' UNDERDRAIN CARRIER PIPE W/FB @ 112+50 RT
⑧ REV. 123+25 LT-RT
NEW 6'' X 68' UNDERDRAIN CARRIER PIPE W/FB @ 123+25 LT

0 50 100
SCALE IN FEET

PROJECT NAME: SEARSBURG - WILMINGTON
PROJECT NUMBER: NHF 010-1(18)
PLOT FILE NAME: dd096hb2
PROJECT LEADER: DELLA SANTA
DESIGN FILE: 78D096/DESIGN/DD096NEC.DGN
PLOT DATE: 26-DEC-2001
DRAWN BY: SQUAD B

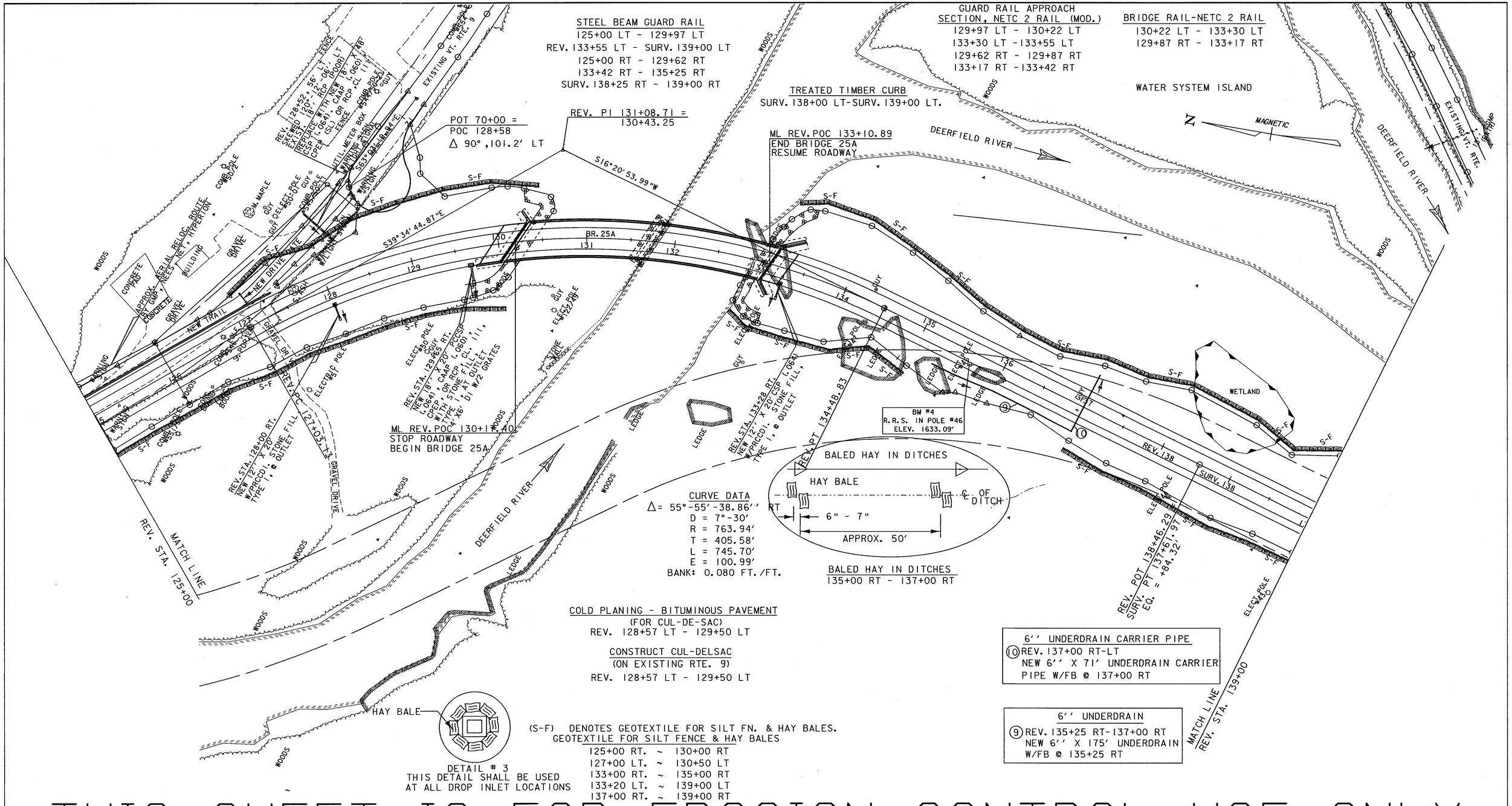

THIS SHEET IS FOR EROSION CONTROL USE ONLY

GENERAL NOTES

1. EROSION CONTROL MATERIALS WILL BE PLACED AS ILLUSTRATED ON NEWLY CONSTRUCTED AREAS AS SOON AS POSSIBLE.
2. DURING CONSTRUCTION EVERY EFFORT WILL BE MADE TO KEEP DEBRIS AND SEDIMENT OUT OF THE DITCH. HAY BALES WILL BE USED AS ILLUSTRATED TO INSURE BANK STABILITY.
3. THE HAY BALES SHALL BE INSPECTED AND CLEANED AS NEEDED.

WATER SYSTEM ISLAND

THE WATER SYSTEM ISLAND TO THE EAST OF THE NEW ALIGNMENT AND BETWEEN THE TWO BRANCHES OF THE DEERFIELD RIVER SHALL BE CONSIDERED A ''NO DISTURBANCE AREA'' AND, THEREFORE, NO CONSTRUCTION ACTIVITY SHALL BE CONDUCTED ON THIS ISLAND.

0 50 100
SCALE IN FEET

PROJECT NAME: SEARSBURG - WILMINGTON
PROJECT NUMBER: NHF 010-1(18)

PLOT FILE NAME: dd096hb3.1
PROJECT LEADER: DELLA SANTA
DESIGN FILE: 78D096/DESIGN/DD096CNUI.DGN
PLOT DATE: 26-DEC-2001
DRAWN BY: SQUAD B

THIS SHEET IS FOR EROSION CONTROL USE ONLY

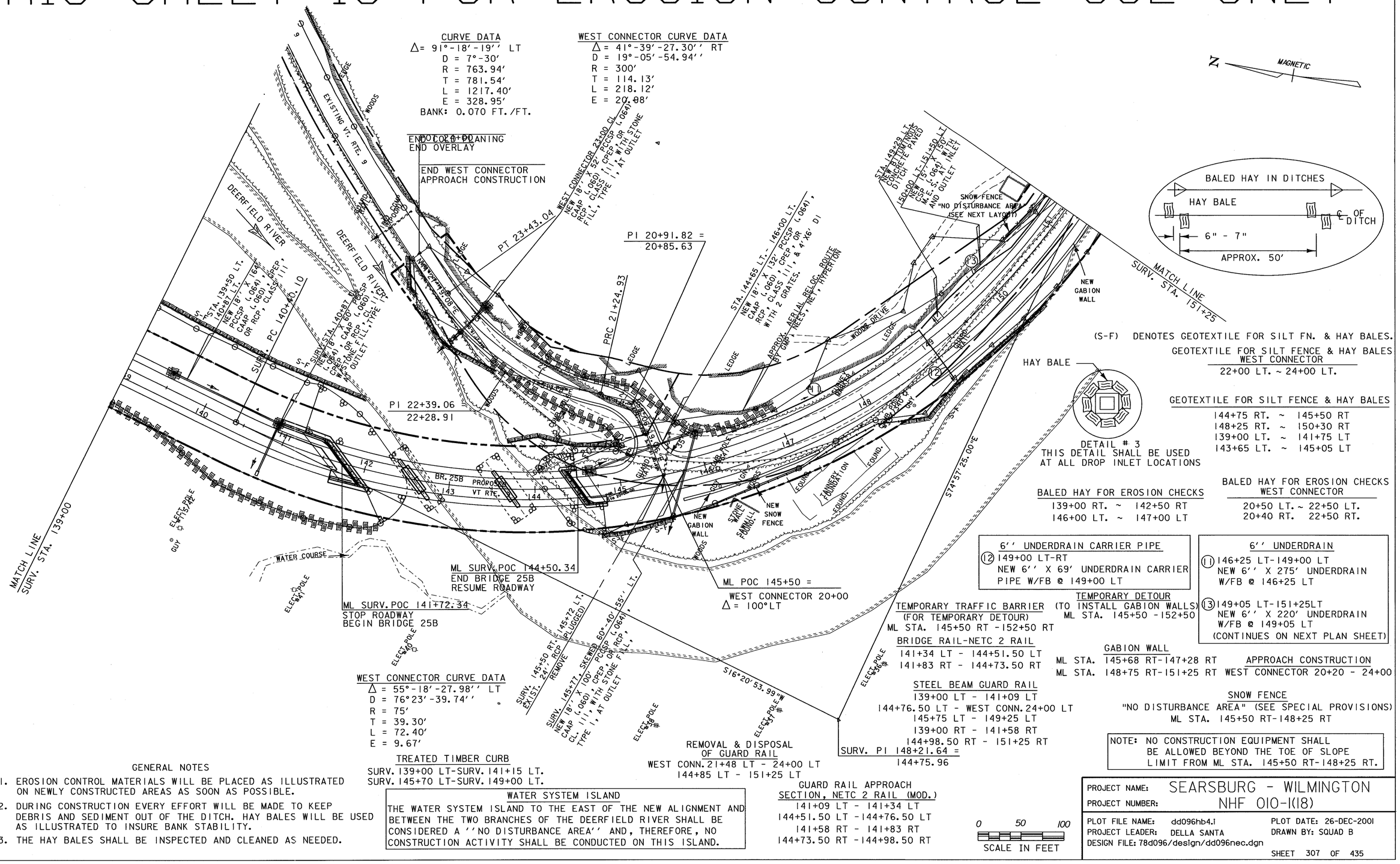

(S-F) DENOTES GEOTEXTILE FOR SILT FN. & HAY BALES.

GEOTEXTILE FOR SILT FENCE & HAY BALES WEST CONNECTOR
22+00 LT. ~ 24+00 LT.

GEOTEXTILE FOR SILT FENCE & HAY BALES
144+75 RT. ~ 145+50 RT
148+25 RT. ~ 150+30 RT
139+00 LT. ~ 141+75 LT
143+65 LT. ~ 145+05 LT

BALED HAY FOR EROSION CHECKS
139+00 RT. ~ 142+50 RT
146+00 LT. ~ 147+00 LT

BALED HAY FOR EROSION CHECKS WEST CONNECTOR
20+50 LT. ~ 22+50 LT.
20+40 RT. 22+50 RT.

6'' UNDERDRAIN CARRIER PIPE
(12) 149+00 LT-RT
NEW 6'' X 69' UNDERDRAIN CARRIER PIPE W/FB @ 149+00 LT

6'' UNDERDRAIN
(11) 146+25 LT-149+00 LT
NEW 6'' X 275' UNDERDRAIN W/FB @ 146+25 LT

(13) 149+05 LT-151+25LT
NEW 6'' X 220' UNDERDRAIN W/FB @ 149+05 LT
(CONTINUES ON NEXT PLAN SHEET)

TEMPORARY TRAFFIC BARRIER (FOR TEMPORARY DETOUR)
ML STA. 145+50 RT - 152+50 RT

TEMPORARY DETOUR (TO INSTALL GABION WALLS)
ML STA. 145+50 - 152+50

BRIDGE RAIL-NETC 2 RAIL
141+34 LT - 144+51.50 LT
141+83 RT - 144+73.50 RT

GABION WALL
ML STA. 145+68 RT-147+28 RT
ML STA. 148+75 RT-151+25 RT

APPROACH CONSTRUCTION
WEST CONNECTOR 20+20 - 24+00

STEEL BEAM GUARD RAIL
139+00 LT - 141+09 LT
144+76.50 LT - WEST CONN. 24+00 LT
145+75 LT - 149+25 LT
139+00 RT - 141+58 RT
144+98.50 RT - 151+25 RT

SNOW FENCE
"NO DISTURBANCE AREA" (SEE SPECIAL PROVISIONS)
ML STA. 145+50 RT-148+25 RT

NOTE: NO CONSTRUCTION EQUIPMENT SHALL BE ALLOWED BEYOND THE TOE OF SLOPE LIMIT FROM ML STA. 145+50 RT-148+25 RT.

WEST CONNECTOR CURVE DATA
Δ = 55°-18'-27.98'' LT
D = 76°23'-39.74''
R = 75'
T = 39.30'
L = 72.40'
E = 9.67'

TREATED TIMBER CURB
SURV. 139+00 LT-SURV. 141+15 LT.
SURV. 145+70 LT-SURV. 149+00 LT.

WATER SYSTEM ISLAND
THE WATER SYSTEM ISLAND TO THE EAST OF THE NEW ALIGNMENT AND BETWEEN THE TWO BRANCHES OF THE DEERFIELD RIVER SHALL BE CONSIDERED A ''NO DISTURBANCE AREA'' AND, THEREFORE, NO CONSTRUCTION ACTIVITY SHALL BE CONDUCTED ON THIS ISLAND.

REMOVAL & DISPOSAL OF GUARD RAIL
WEST CONN. 21+48 LT - 24+00 LT
144+85 LT - 151+25 LT

GUARD RAIL APPROACH SECTION, NETC 2 RAIL (MOD.)
141+09 LT - 141+34 LT
144+51.50 LT -144+76.50 LT
141+58 RT - 141+83 RT
144+73.50 RT -144+98.50 RT

GENERAL NOTES

1. EROSION CONTROL MATERIALS WILL BE PLACED AS ILLUSTRATED ON NEWLY CONSTRUCTED AREAS AS SOON AS POSSIBLE.
2. DURING CONSTRUCTION EVERY EFFORT WILL BE MADE TO KEEP DEBRIS AND SEDIMENT OUT OF THE DITCH. HAY BALES WILL BE USED AS ILLUSTRATED TO INSURE BANK STABILITY.
3. THE HAY BALES SHALL BE INSPECTED AND CLEANED AS NEEDED.

PROJECT NAME: SEARSBURG - WILMINGTON
PROJECT NUMBER: NHF 010-1(18)

PLOT FILE NAME: dd096hb4.l
PLOT DATE: 26-DEC-2001
PROJECT LEADER: DELLA SANTA
DRAWN BY: SQUAD B
DESIGN FILE: 78d096/design/dd096nec.dgn

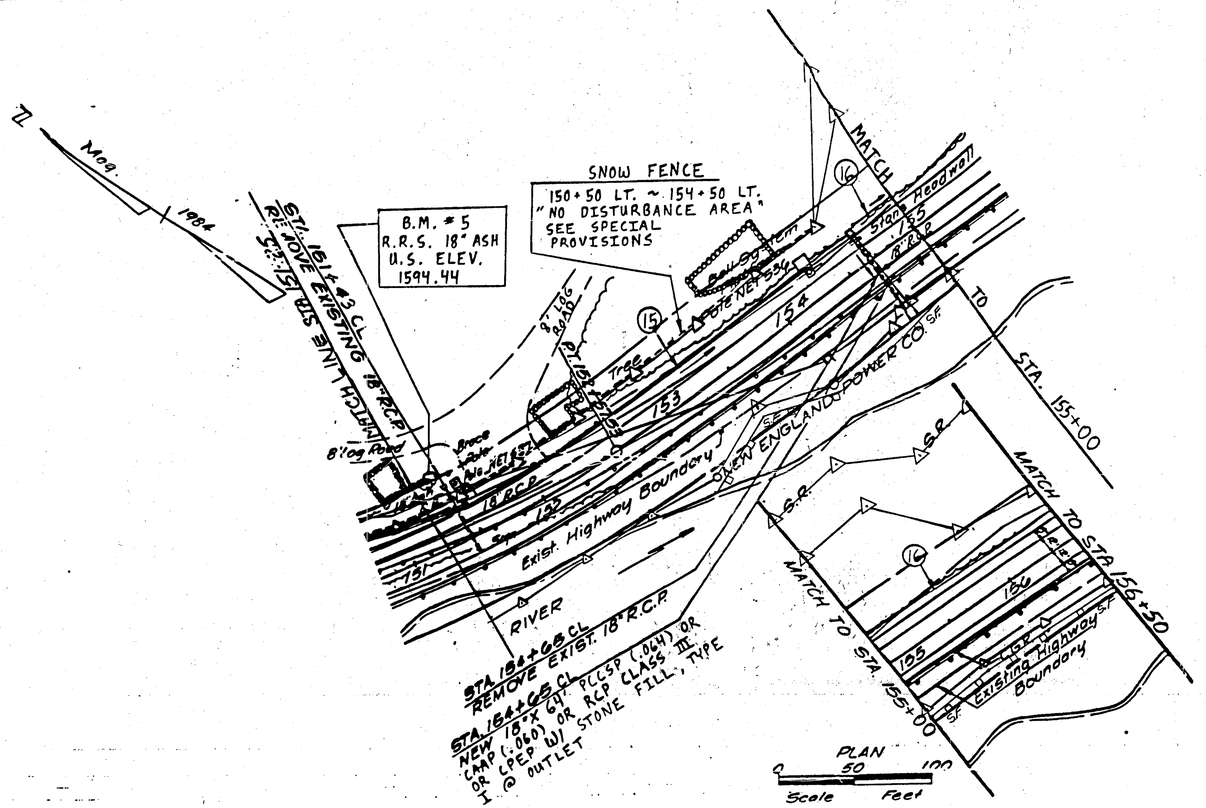

(S-F) DENOTES GEOTEXTILE FOR SILT FN. & HAY BALES.
GEOTEXTILE FOR SILT FENCE & HAY BALES
151+25 RT. ~ 156+50 RT.

BALED HAY IN DITCHES
155+00 LT ~ 156+50 LT

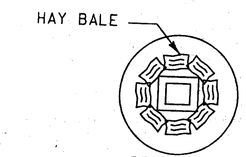

DETAIL # 3
THIS DETAIL SHALL BE USED
AT ALL DROP INLET LOCATIONS

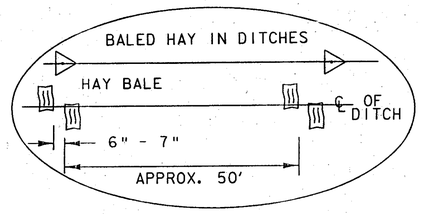

THIS SHEET IS FOR EROSION CONTROL USE ONLY

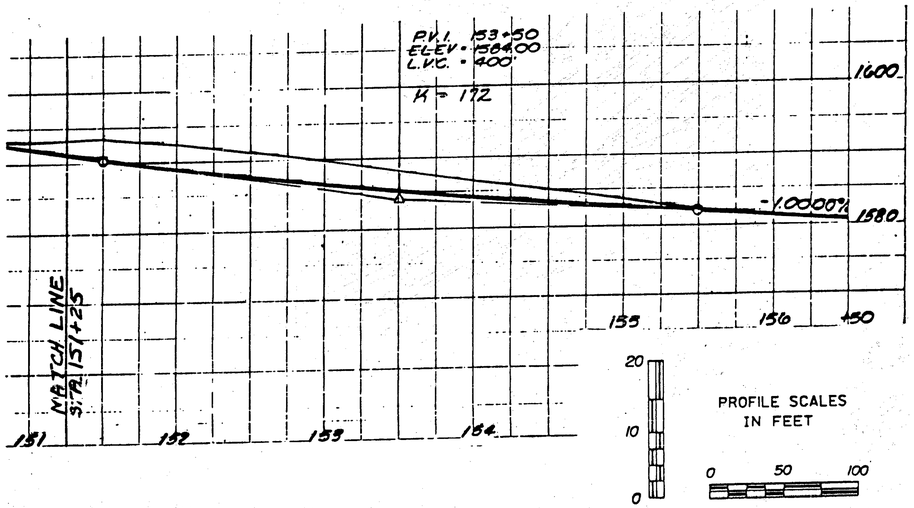

GENERAL NOTES

1. EROSION CONTROL MATERIALS WILL BE PLACED AS ILLUSTRATED ON NEWLY CONSTRUCTED AREAS AS SOON AS POSSIBLE.
2. DURING CONSTRUCTION EVERY EFFORT WILL BE MADE TO KEEP DEBRIS AND SEDIMENT OUT OF THE DITCH. HAY BALES WILL BE USED AS ILLUSTRATED TO INSURE BANK STABILITY.
3. THE HAY BALES SHALL BE INSPECTED AND CLEANED AS NEEDED.

PROJECT NAME: SEARSBURG - WILMINGTON
PROJECT NUMBER: NHF 010-1(18)

PLOT FILE NAME: dd096hb5.1
PROJECT LEADER: DELLA SANTA
DESIGN FILE: 78D096/DESIGN/DD096CBR.DGN
PLOT DATE: 07-OCT-2000
DRAWN BY: SQUAD B

THIS SHEET IS FOR EROSION CONTROL USE ONLY

(S-F) DENOTES GEOTEXTILE FOR SILT FN. & HAY BALES.

GEOTEXTILE FOR SILT FENCE & HAY BALES

156+50RT. ~ 157+65 RT.
160+45RT. ~ 166+75 RT.
168+00RT. ~ 172+50RT.
168+50LT. ~ 169+75 LT.
170+25LT. ~ 172+00 LT.

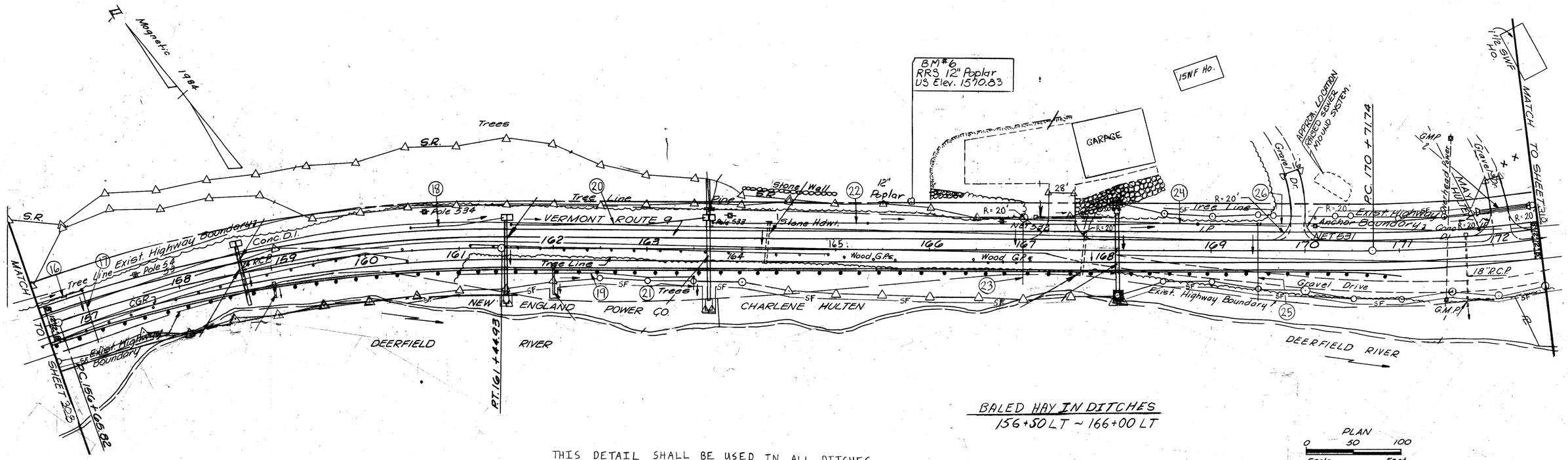

BALED HAY IN DITCHES
156+50 LT ~ 166+00 LT

PLAN
0 50 100
Scale Feet

THIS DETAIL SHALL BE USED IN ALL DITCHES

DETAIL # 10.

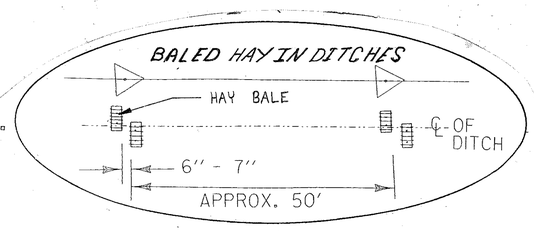

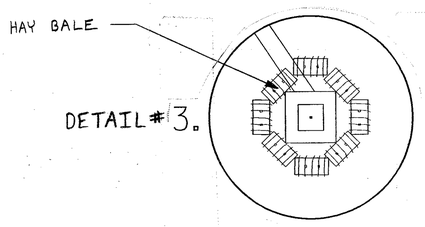

THIS DETAIL SHALL BE USED AT ALL DROP INLET LOCATIONS

GENERAL NOTES

1. EROSION CONTROL MATERIALS WILL BE PLACED AS ILLUSTRATED ON NEWLY CONSTRUCTED AREAS AS SOON AS POSSIBLE.
2. DURING CONSTRUCTION EVERY EFFORT WILL BE MADE TO KEEP DEBRIS AND SEDIMENT OUT OF THE DITCH. HAY BALES WILL BE USED AS ILLUSTRATED TO INSURE BANK STABILITY.
3. THE HAY BALES SHALL BE INSPECTED AND CLEANED AS NEEDED.

PROJECT: SEARSBURG - WILMINGTON	PROJECT NO.: NHF 010-1(18)
SQUAD LEADER: DELLA SANTA	DRAWN BY: SQUAD B
LAYOUT # 6	SHEET: 309 OF 435

THIS SHEET IS FOR EROSION CONTROL USE ONLY

(S-F) DENOTES GEOTEXTILE FOR SILT FN. & HAY BALES.
GEOTEXTILE FOR SILT FENCE & HAY BALES

172+50 RT. ~ 187+00 RT.
177+25 LT. ~ 178+25 LT.
185+75 LT. ~ 187+00 LT.

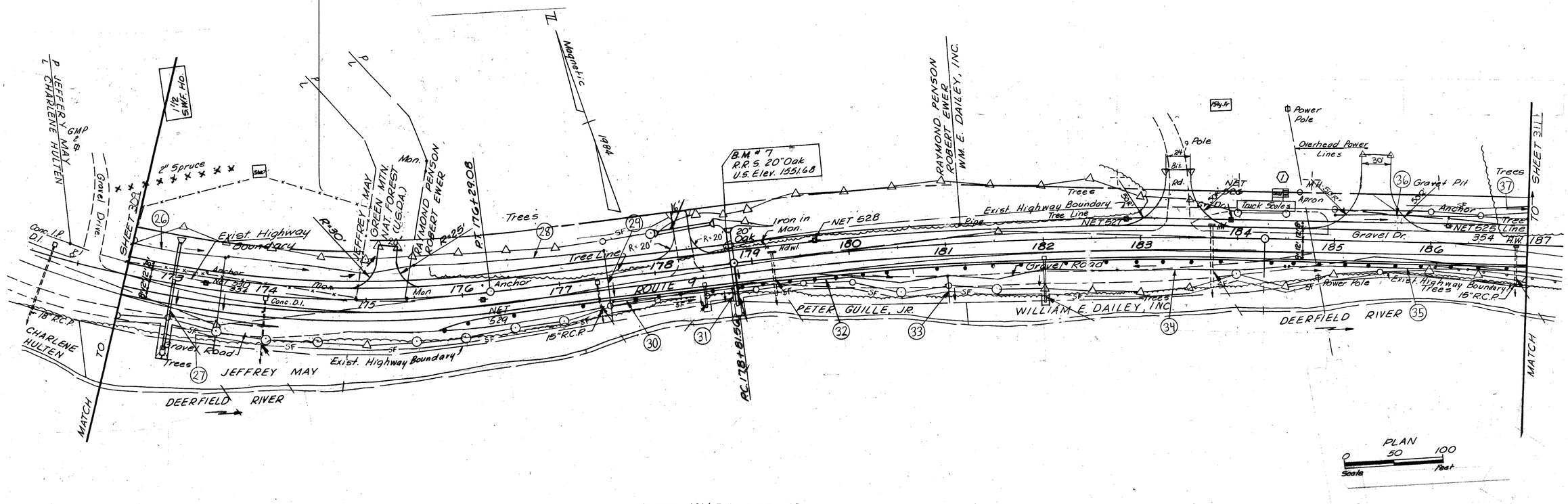

BALED HAY IN DITCHES
173+00 LT ~ 177+00 LT
180+00 LT ~ 183+00 LT

THIS DETAIL SHALL BE USED IN ALL DITCHES

DETAIL # 10.

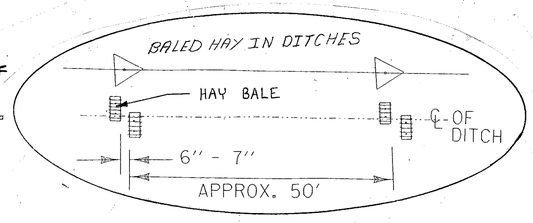

GENERAL NOTES

1. EROSION CONTROL MATERIALS WILL BE PLACED AS ILLUSTRATED ON NEWLY CONSTRUCTED AREAS AS SOON AS POSSIBLE.
2. DURING CONSTRUCTION EVERY EFFORT WILL BE MADE TO KEEP DEBRIS AND SEDIMENT OUT OF THE DITCH. HAY BALES WILL BE USED AS ILLUSTRATED TO INSURE BANK STABILITY.
3. THE HAY BALES SHALL BE INSPECTED AND CLEANED AS NEEDED.

PROJECT: SEARSBURG - WILMINGTON	PROJECT NO.: NHF 010-1(18)
SQUAD LEADER: DELLA SANTA	DRAWN BY: SQUAD B
LAYOUT #7	SHEET: 310 OF 435

THIS SHEET IS FOR EROSION CONTROL USE ONLY

(S-F) DENOTES GEOTEXTILE FOR SILT FN. & HAY BALES.
GEOTEXTILE FOR SILT FENCE & HAY BALES

187+00 LT. ~ 188+75 LT.
187+00 RT. ~ 202+50 RT.
192+75 LT. ~ 194+25 LT.

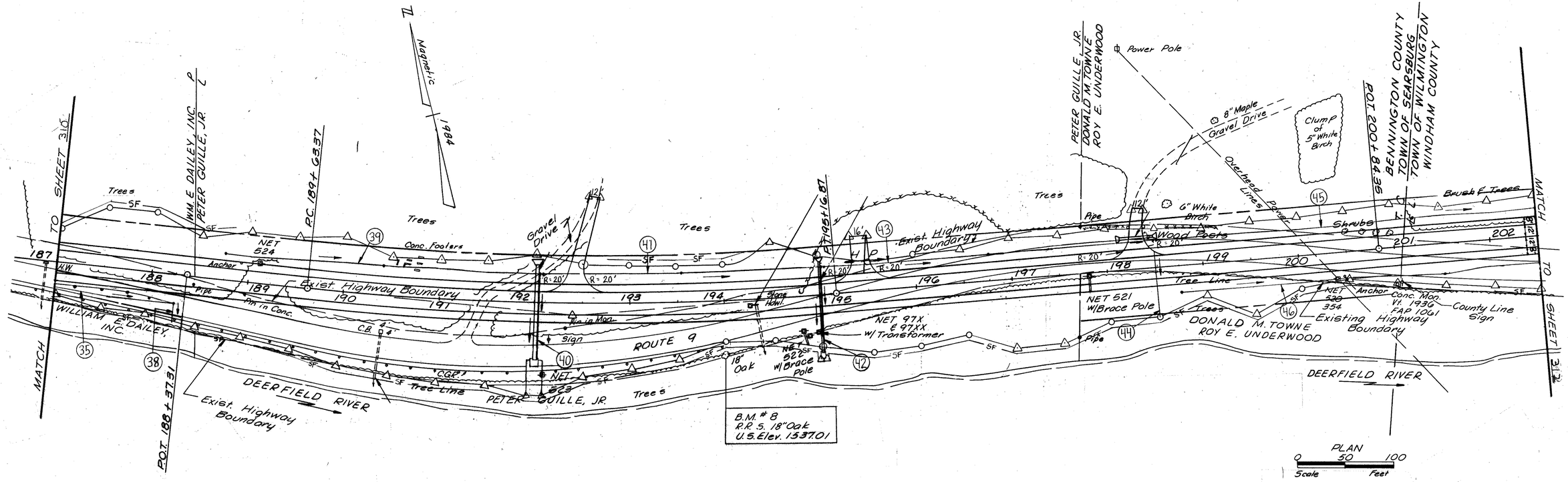

BALED HAY IN DITCHES
189+00 LT ~ 190+30 LT
199+00 LT ~ 202+50 LT

THIS DETAIL SHALL BE USED IN ALL DITCHES

DETAIL # 10.

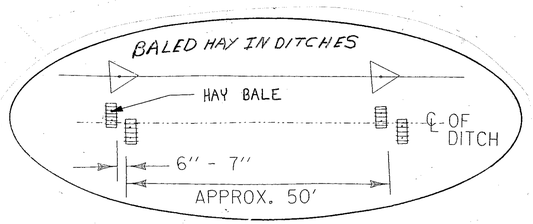

GENERAL NOTES

1. EROSION CONTROL MATERIALS WILL BE PLACED AS ILLUSTRATED ON NEWLY CONSTRUCTED AREAS AS SOON AS POSSIBLE.
2. DURING CONSTRUCTION EVERY EFFORT WILL BE MADE TO KEEP DEBRIS AND SEDIMENT OUT OF THE DITCH. HAY BALES WILL BE USED AS ILLUSTRATED TO INSURE BANK STABILITY.
3. THE HAY BALES SHALL BE INSPECTED AND CLEANED AS NEEDED.

PROJECT: SEARSBURG - WILMINGTON	PROJECT NO.: NHF 010-1(18)
SQUAD LEADER: DELLA SANTA	DRAWN BY: SQUAD B
LAYOUT #8	SHEET: 311 OF 435

THIS SHEET IS FOR EROSION CONTROL USE ONLY

(S-F) DENOTES GEOTEXTILE FOR SILT FN. & HAY BALES.
GEOTEXTILE FOR SILT FENCE & HAY BALES
202+50 RT. ~ 211+25 RT.
213+05 RT. ~ 219+00 RT.

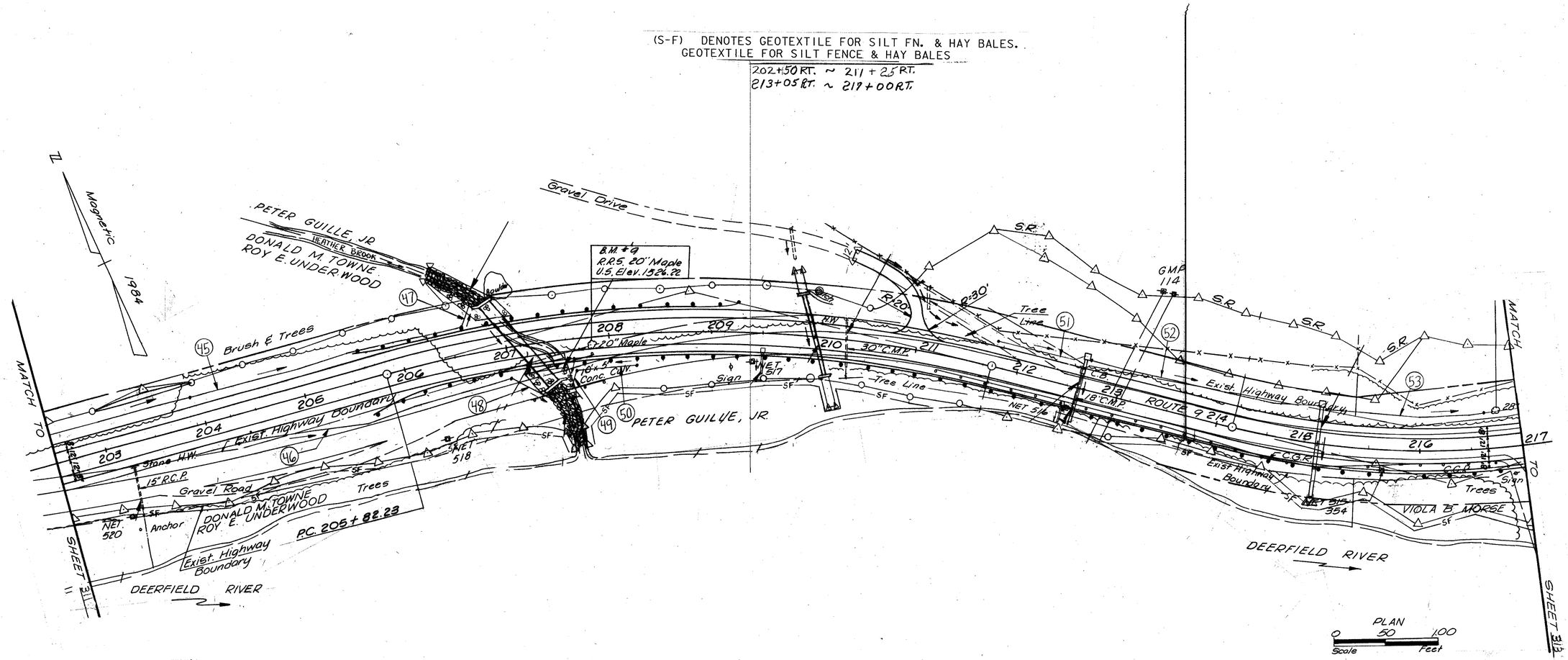

BALED HAY IN DITCHES
202+50 LT ~ 203+50 LT
208+00 LT ~ 209+50 LT
210+50 LT ~ 217+00 LT

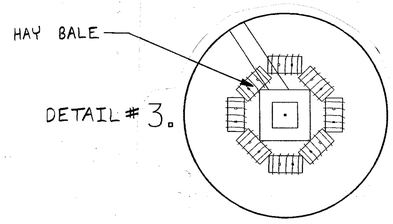

DETAIL # 3.

THIS DETAIL SHALL BE USED AT ALL DROP INLET LOCATIONS

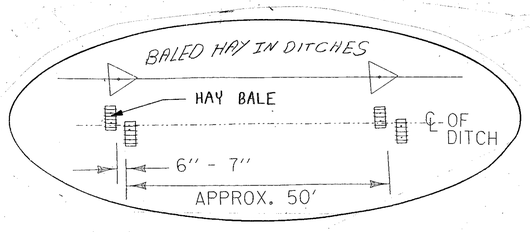

DETAIL # 10.

THIS DETAIL SHALL BE USED IN ALL DITCHES

GENERAL NOTES

1. EROSION CONTROL MATERIALS WILL BE PLACED AS ILLUSTRATED ON NEWLY CONSTRUCTED AREAS AS SOON AS POSSIBLE.
2. DURING CONSTRUCTION EVERY EFFORT WILL BE MADE TO KEEP DEBRIS AND SEDIMENT OUT OF THE DITCH. HAY BALES WILL BE USED AS ILLUSTRATED TO INSURE BANK STABILITY.
3. THE HAY BALES SHALL BE INSPECTED AND CLEANED AS NEEDED.

PROJECT: SEARSBURG - WILMINGTON	PROJECT NO.: NHF 010-1(18)
SQUAD LEADER: DELLA SANTA	DRAWN BY: SQUAD B
LAYOUT #9	SHEET: 312 OF 435

THIS SHEET IS FOR EROSION CONTROL USE ONLY

(S-F) DENOTES GEOTEXTILE FOR SILT FN. & HAY BALES.
GEOTEXTILE FOR SILT FENCE & HAY BALES
218+25 RT. ~ 219+63 RT.
221+00 RT. ~ 224+80 RT.

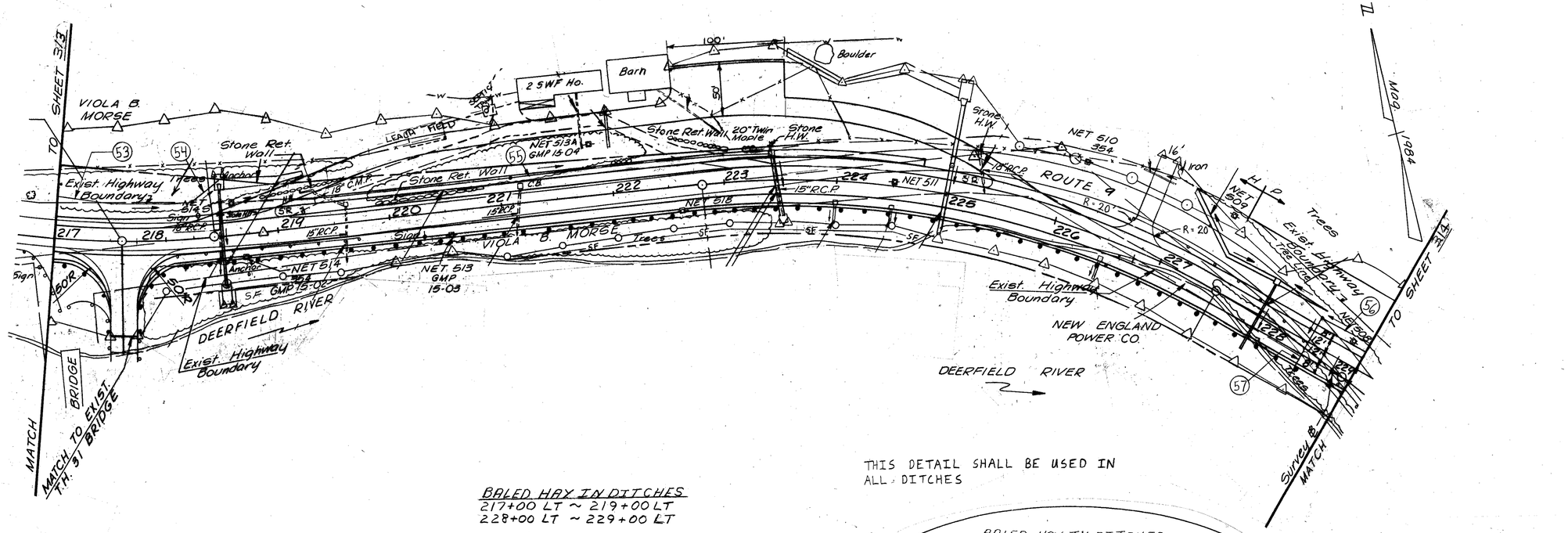

BALED HAY IN DITCHES
217+00 LT ~ 219+00 LT
228+00 LT ~ 229+00 LT

THIS DETAIL SHALL BE USED IN ALL DITCHES

DETAIL # 10.

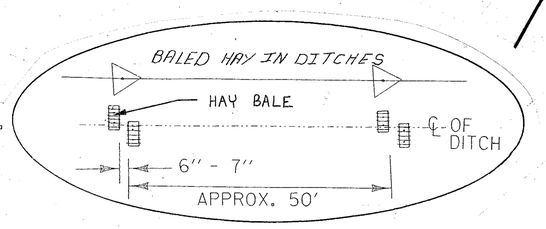

HAY BALE

DETAIL # 3.

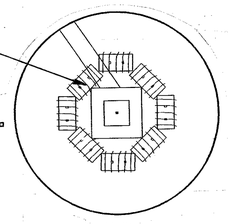

THIS DETAIL SHALL BE USED AT ALL DROP INLET LOCATIONS

GENERAL NOTES

1. EROSION CONTROL MATERIALS WILL BE PLACED AS ILLUSTRATED ON NEWLY CONSTRUCTED AREAS AS SOON AS POSSIBLE.
2. DURING CONSTRUCTION EVERY EFFORT WILL BE MADE TO KEEP DEBRIS AND SEDIMENT OUT OF THE DITCH. HAY BALES WILL BE USED AS ILLUSTRATED TO INSURE BANK STABILITY.
3. THE HAY BALES SHALL BE INSPECTED AND CLEANED AS NEEDED.

PROJECT: SEARSBURG - WILMINGTON	PROJECT NO.: NHF 010-1(18)
SQUAD LEADER: DELLA SANTA	DRAWN BY: SQUAD B
LAYOUT #10	SHEET: 313 OF 435

THIS SHEET IS FOR EROSION CONTROL USE ONLY

(S-F) DENOTES GEOTEXTILE FOR SILT FN. & HAY BALES.
GEOTEXTILE FOR SILT FENCE & HAY BALES
229+00 RT. ~ 230+50 RT.
234+75 RT. ~ 240+40 RT.

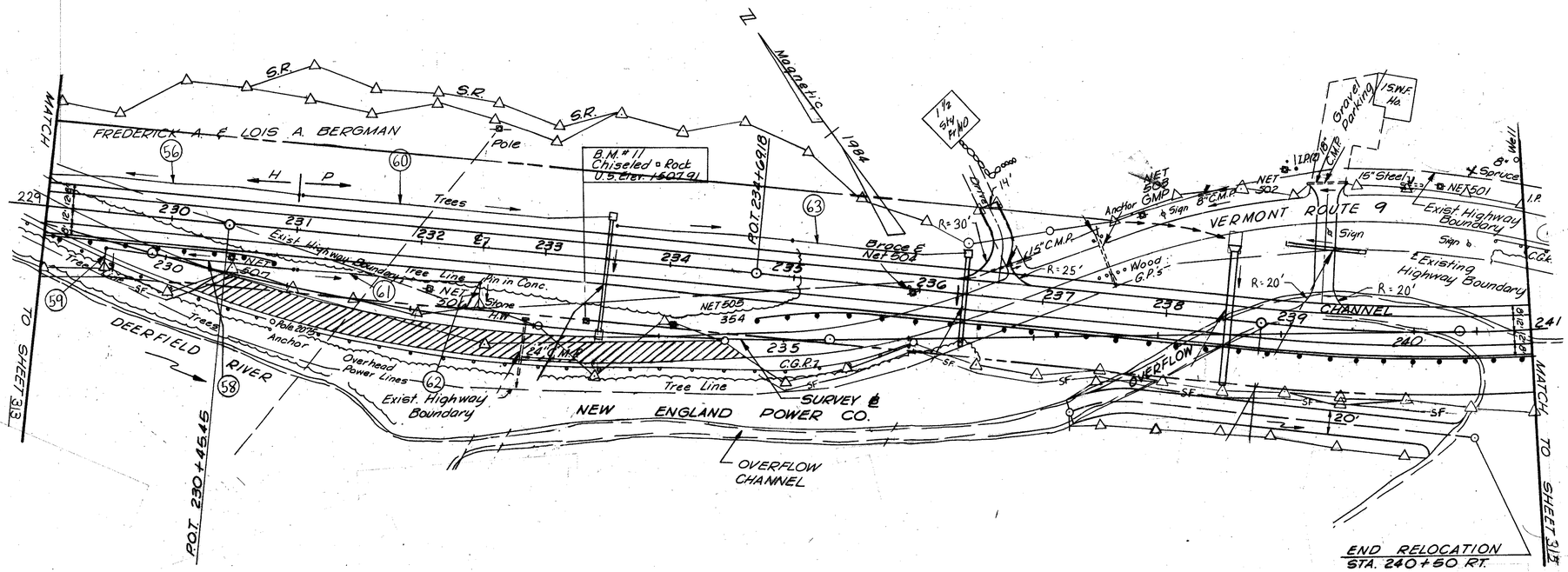

BALED HAY IN DITCHES
229+00 LT ~ 236+00 LT

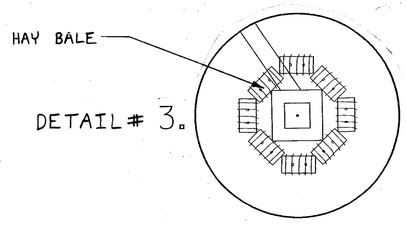

DETAIL # 3.

THIS DETAIL SHALL BE USED AT ALL DROP INLET LOCATIONS

THIS DETAIL SHALL BE USED IN ALL DITCHES

DETAIL # 10.

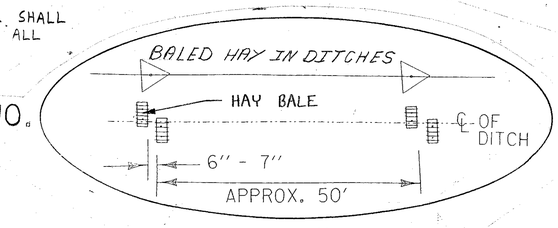

GENERAL NOTES

1. EROSION CONTROL MATERIALS WILL BE PLACED AS ILLUSTRATED ON NEWLY CONSTRUCTED AREAS AS SOON AS POSSIBLE.
2. DURING CONSTRUCTION EVERY EFFORT WILL BE MADE TO KEEP DEBRIS AND SEDIMENT OUT OF THE DITCH. HAY BALES WILL BE USED AS ILLUSTRATED TO INSURE BANK STABILITY.
3. THE HAY BALES SHALL BE INSPECTED AND CLEANED AS NEEDED.

PROJECT: SEARSBURG - WILMINGTON	PROJECT NO.: NHF 010-1(18)
SQUAD LEADER: DELLA SANTA	DRAWN BY: SQUAD B
LAYOUT #11	SHEET: 314 OF 435

THIS SHEET IS FOR EROSION CONTROL USE ONLY

(S-F) DENOTES GEOTEXTILE FOR SILT FN. & HAY BALES.
GEOTEXTILE FOR SILT FENCE & HAY BALES
250+20 RT. ~ 253+75 RT

GEOTEXTILE FOR FILTER CURTAIN
241+00 RT ~ 250+00 RT
(TO PROTECT RESERVOIR)

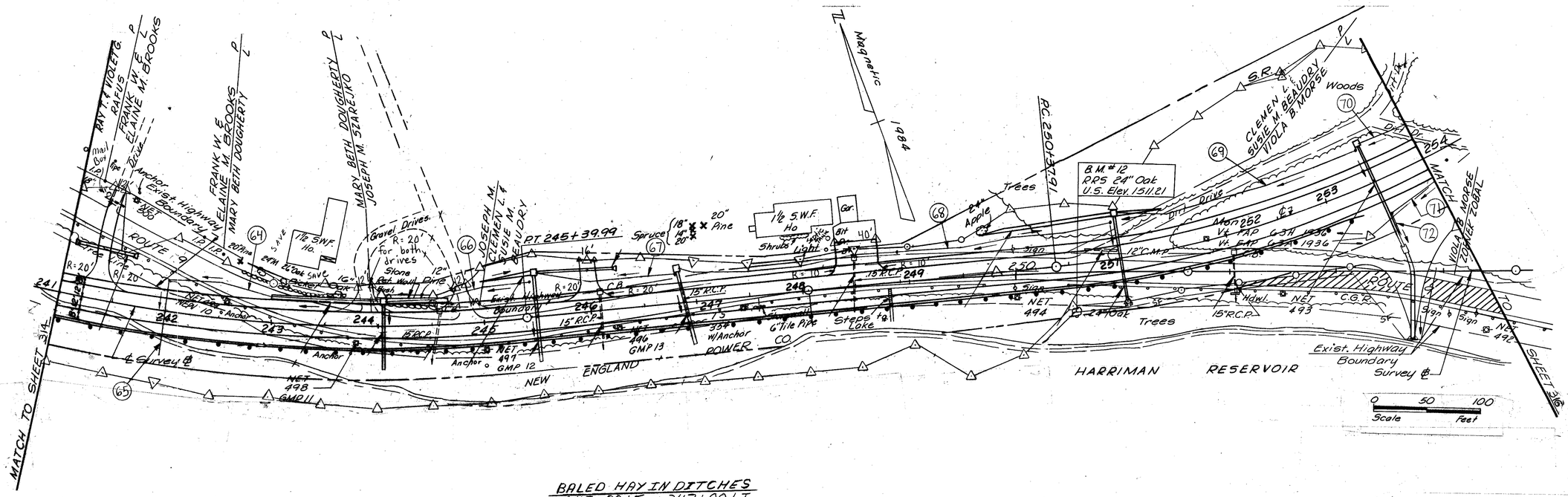

BALED HAY IN DITCHES
245+00 LT ~ 247+00 LT
250+00 LT ~ 254+00 LT

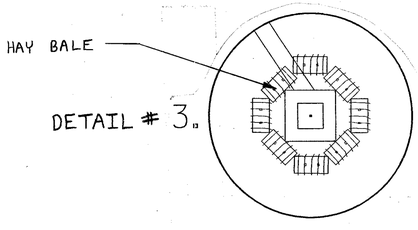

DETAIL # 3.

THIS DETAIL SHALL BE USED AT ALL DROP INLET LOCATIONS

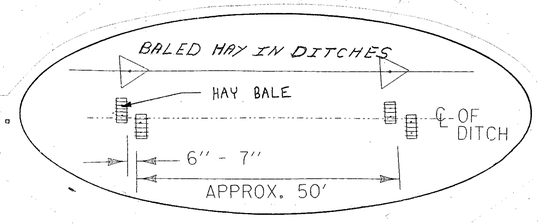

DETAIL # 10.

THIS DETAIL SHALL BE USED IN ALL DITCHES

GENERAL NOTES

1. EROSION CONTROL MATERIALS WILL BE PLACED AS ILLUSTRATED ON NEWLY CONSTRUCTED AREAS AS SOON AS POSSIBLE.
2. DURING CONSTRUCTION EVERY EFFORT WILL BE MADE TO KEEP DEBRIS AND SEDIMENT OUT OF THE DITCH. HAY BALES WILL BE USED AS ILLUSTRATED TO INSURE BANK STABILITY.
3. THE HAY BALES SHALL BE INSPECTED AND CLEANED AS NEEDED.

PROJECT: SEARSBURG - WILMINGTON	PROJECT NO.: NHF 010-1(18)
SQUAD LEADER: DELLA SANTA	DRAWN BY: SQUAD B
LAYOUT #12	SHEET: 315 OF 435

THIS SHEET IS FOR EROSION CONTROL USE ONLY

(S-F) DENOTES GEOTEXTILE FOR SILT FN. & HAY BALES.
GEOTEXTILE FOR SILT FENCE & HAY BALES
259+75 RT. ~ 260+25 RT
263+75 RT. ~ 269+00 RT
EAST CONN. 11+25 RT. ~ 13+00 RT

GEOTEXTILE FOR FILTER CURTAIN
267+50 RT ~ 269+00 RT
(TO PROTECT RESERVOIR)

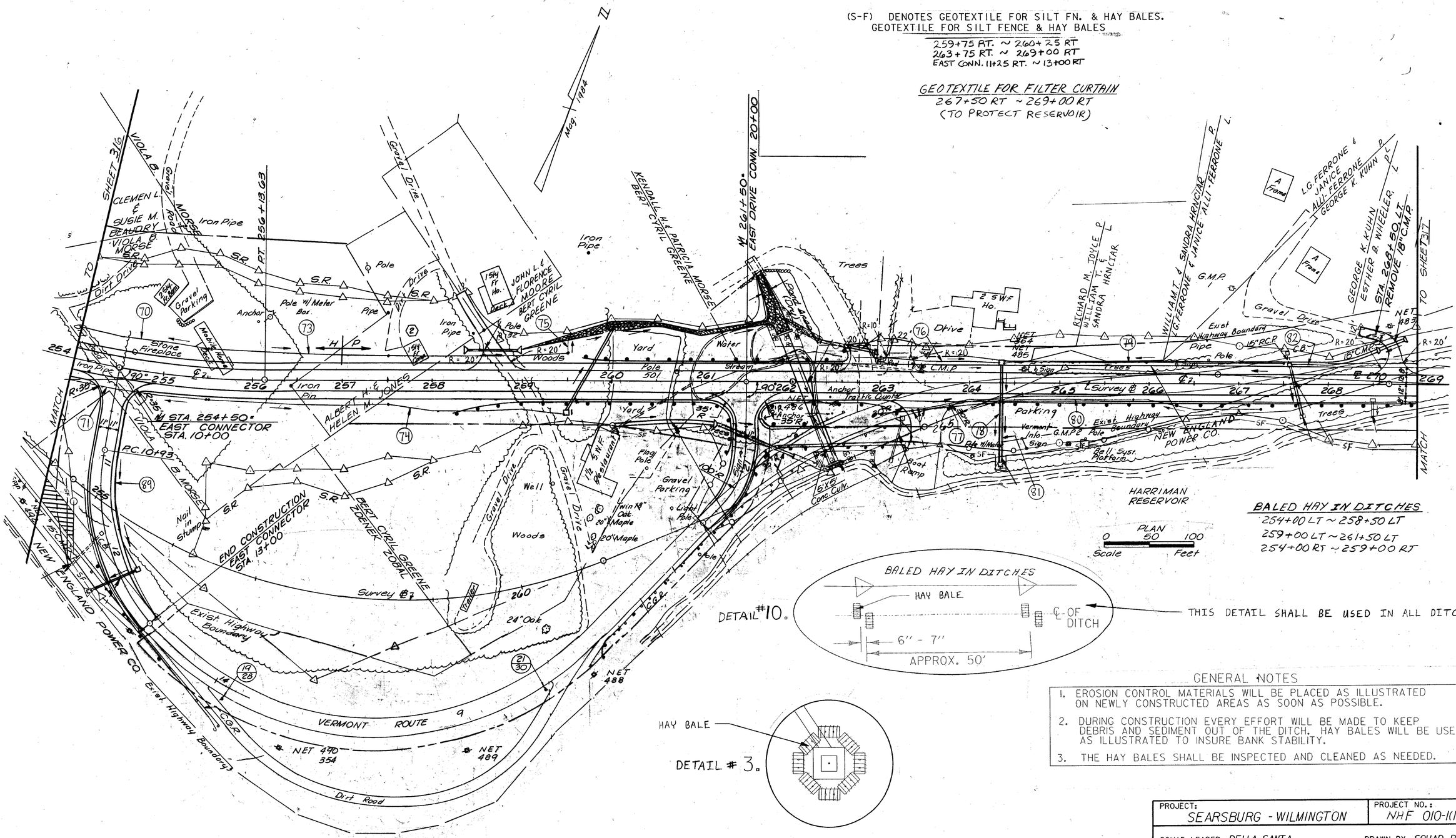
SHEET 316
TO SHEET 317
MATCH
Mag. 484
W 261+50 EAST DRIVE CONN. 20+00
KENDALL H. & PATRICIA MORSE
BERT CYRIL GREENE
CLEMEN L. & SUSIE M. BEAUDRY
VIOLA B. MORSE
VIOLA B. MORSE Road
Iron Pipe
Dirt Drive
Gravel Drive
Gravel Parking
Pole w/ Meter Box
Anchor
Pole
Drive
JOHN L. & FLORENCE MOORE
BERT CYRIL GREENE
Trees
Yard
Water
Stream
Woods
Stone Fireplace
Iron Pin
ALBERT H. & HELEN M. JONES
N STA. 254+50 = EAST CONNECTOR STA. 10+00
PC 10+93
E MOSSEY
Nail in Stump
END CONSTRUCTION EAST CONNECTOR STA. 13+00
BERT CYRIL GREENE ZDENER TOBAL
Survey ℄
Trailer
24" Oak
Well
Gravel Drive
1½ S.W.F. Restaurant
Flag Pole
Gravel Parking
Light Pole
Twin 18" Oak
20" Maple
20" Maple
6'x6' Conc. Culv.
Boat Ramp
Parking
Vermont Info. Sign
Exist Highway Boundary
Pole
G.M.P.
Bell Syst. Platform
NEW ENGLAND POWER CO.
Exist. Highway Boundary
VERMONT ROUTE 9
Dirt Road
NET 490
354
NET 489
NET 488
NET 486
NET 484
NET 483
HARRIMAN RESERVOIR
RICHARD M. JOYCE
WILLIAM T. & SANDRA HINCIAR
WILLIAM T. & SANDRA HINCIAR
G. FERRONE & JANICE ALLI-FERRONE
L.G. FERRONE & JANICE ALLI-FERRONE
GEORGE K. KUHN
GEORGE K. KUHN
ESTHER B. WHEELER
STA. 268+50 LT
REMOVE 18" C.M.P.
A Frame
2 S.W.F. Ho.
1 S.W.F. Ho.
Gravel Drive
15" R.C.P.
18" C.M.P.
C.B.
C.M.P.
Trees
Survey ℄ 266
Parking
Vermont Info. Sign
Exist Highway Boundary
Pole
G.M.P.
Bell Syst. Platform
NEW ENGLAND POWER CO.
Trees
MATCH
R=35'
R=20'
R=10'
90°
Curve Data
Δ=45°
D=11°30'
T=8.28
L=15.71
R=136.46'
Δ=1°30'
D=42°
T=5.49
L=10.47
R=136.46'
Δ=1°30'
D=42°
T=5.49
L=10.47
Δ=90°
D=57°18'
T=20.00
L=31.42
R=100'

THIS SHEET IS FOR EROSION CONTROL USE ONLY

(S-F) DENOTES GEOTEXTILE FOR SILT FN. & HAY BALES.
GEOTEXTILE FOR SILT FENCE & HAY BALES
272+89 RT. ~ 280+15 RT.
283+25 RT. ~ 285+80 RT.

GEOTEXTILE FOR FILTER CURTAIN
269+00 RT ~ 273+00 RT
(TO PROTECT RESERVOIR)

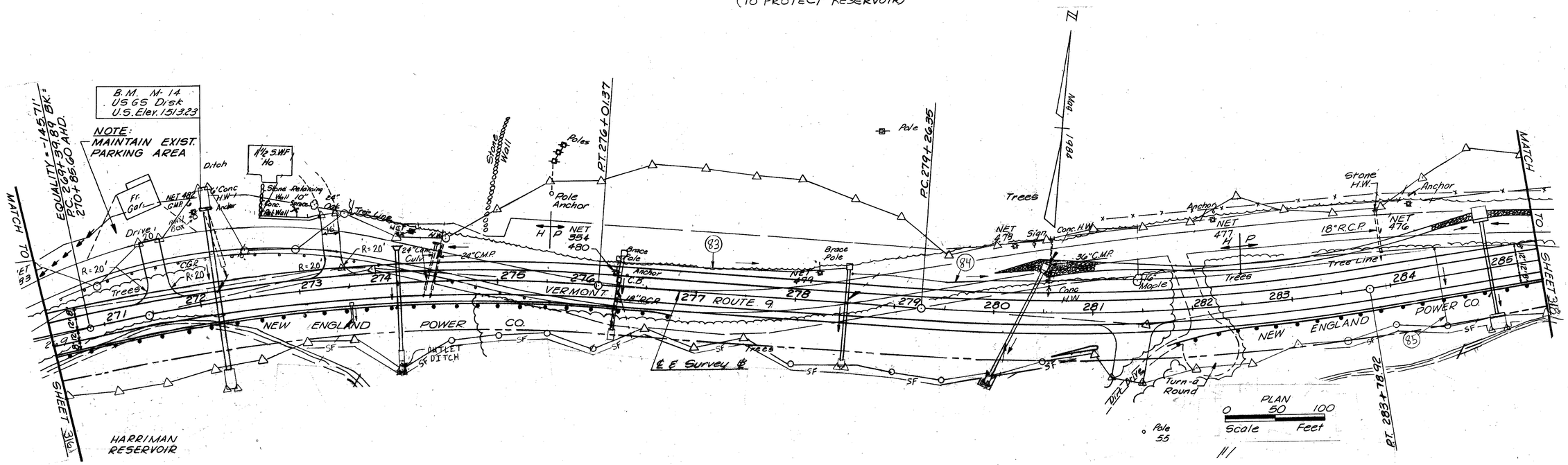

BALED HAY IN DITCHES
274+00 LT ~ 285+00 LT
282+00 RT ~ 283+00 RT

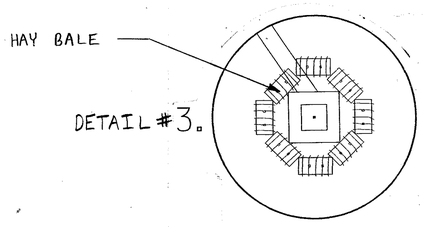

THIS DETAIL SHALL BE USED AT ALL DROP INLET LOCATIONS

THIS DETAIL SHALL BE USED IN ALL DITCHES

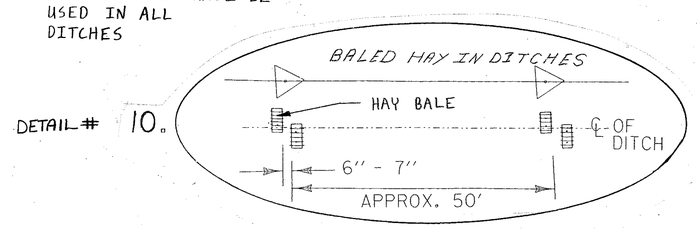

GENERAL NOTES

1. EROSION CONTROL MATERIALS WILL BE PLACED AS ILLUSTRATED ON NEWLY CONSTRUCTED AREAS AS SOON AS POSSIBLE.
2. DURING CONSTRUCTION EVERY EFFORT WILL BE MADE TO KEEP DEBRIS AND SEDIMENT OUT OF THE DITCH. HAY BALES WILL BE USED AS ILLUSTRATED TO INSURE BANK STABILITY.
3. THE HAY BALES SHALL BE INSPECTED AND CLEANED AS NEEDED.

PROJECT: SEARSBURG - WILMINGTON	PROJECT NO.: NHF 010-1(18)
SQUAD LEADER: DELLA SANTA	DRAWN BY: SQUAD B
LAYOUT #14	SHEET: 317 OF 435

THIS SHEET IS FOR EROSION CONTROL USE ONLY

(S-F) DENOTES GEOTEXTILE FOR SILT FN. & HAY BALES.
GEOTEXTILE FOR SILT FENCE & HAY BALES
285+50 RT. ~ 292+50 RT

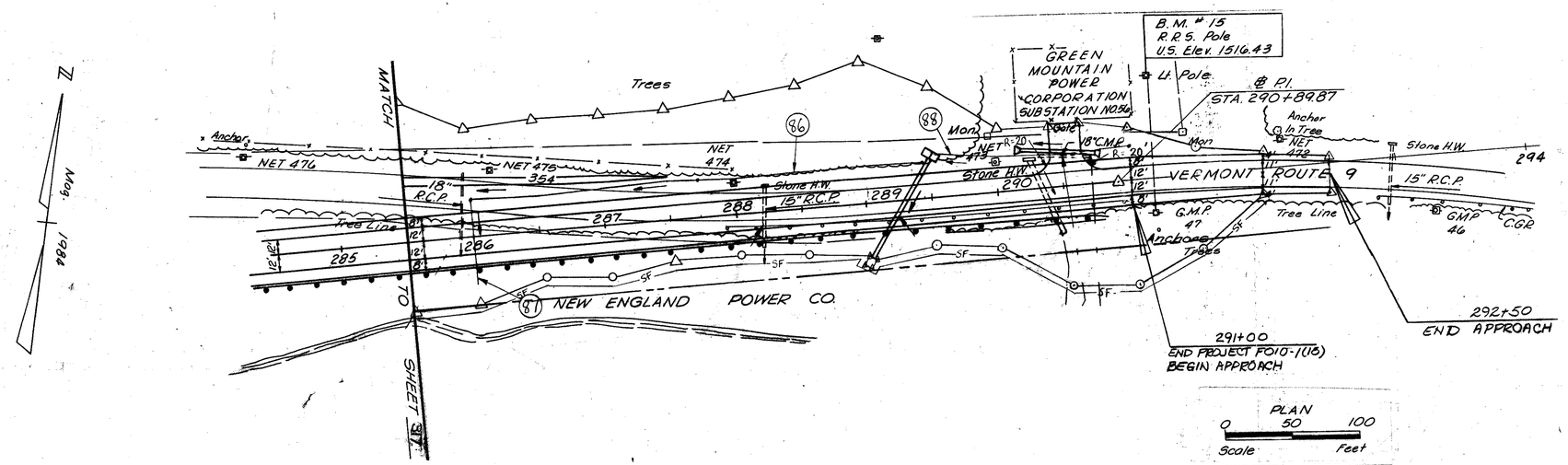

BALED HAY IN DITCHES
285+00 LT ~ 289+00 LT

THIS DETAIL SHALL BE USED IN ALL DITCHES

DETAIL # 10.

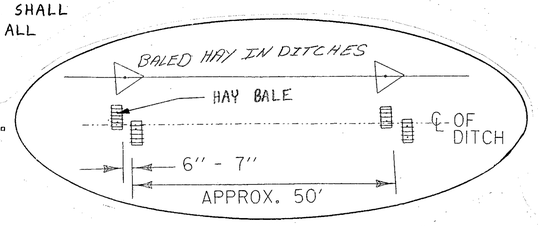

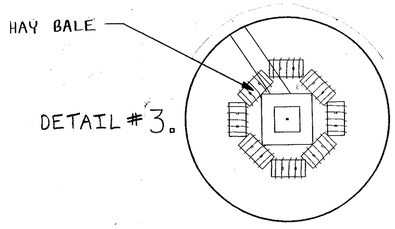

THIS DETAIL SHALL BE USED AT ALL DROP INLET LOCATIONS

GENERAL NOTES

1. EROSION CONTROL MATERIALS WILL BE PLACED AS ILLUSTRATED ON NEWLY CONSTRUCTED AREAS AS SOON AS POSSIBLE.
2. DURING CONSTRUCTION EVERY EFFORT WILL BE MADE TO KEEP DEBRIS AND SEDIMENT OUT OF THE DITCH. HAY BALES WILL BE USED AS ILLUSTRATED TO INSURE BANK STABILITY.
3. THE HAY BALES SHALL BE INSPECTED AND CLEANED AS NEEDED.

PROJECT: SEARSBURG - WILMINGTON	PROJECT NO.: NHF 010-1(18)
SQUAD LEADER: DELLA SANTA	DRAWN BY: SQUAD B
	SHEET: 318 OF 435

QUANTITY SHEET

QUANTITY	UNIT	KEY	BOTANICAL NAME	COMMON NAME	SIZE	SPACING	REMARKS	ITEM *
			EVERGREEN TREES					656.20
3	EA	LL	LARIX LARICINA	LARCH	4'	15' O.C.		
5	EA	AB	~~ABIES BALSAMEA~~ PICEA MARIANA	~~BALSAM FIR~~ BLACK SPRUCE	4'	15' O.C.		
			DECIDUOUS TREES					656.30
8	EA	AR	ACER RUBRUM	RED MAPLE	1" CAL.	15' O.C.		
3	EA	FP	FRAXINUS PENNSYLVANICA	GREEN ASH	1" CAL.	15' O.C.		
3	EA	PD	POPULUS DELTOIDES	COTTONWOOD	1" CAL.	15' O.C.		
7	EA	SN	SALIX NIGRA	BLACK WILLOW	1" CAL.	15' O.C.		
			DECIDUOUS SHRUBS					656.35
10	EA	CO	CEPHALANTHUS OCCIDENTALIS	BUTTONBUSH	2'-3'	6' O.C.		
18	EA	CS	CORNUS SERICEA	RED-OSIER DOGWOOD	2'-3'	6' O.C.		
80	EA	CC	CRATAEGUS CRUS-GALLI	COCKSPUR HAWTHORNE	2'-3'	6' O.C.		
45	EA	IV	ILEX VERTICILLATA	WINTERBERRY	2'-3'	6' O.C.		
14	EA	VC	VIBURNUM CASSINOIDES	WILD RAISIN	2'-3'	6' O.C.		
12	EA	VT	VIBURNUM TRILOBUM	HIGHBUSH CRANBERRY	2'-3'	6' O.C.		
16	FACINE	SS	SALIX SERICEA	SILKY WILLOW	6'0, 20' LONG		END TO END IN TRENCH	
			GROUND COVER AND VINES					656.35
975	EA	SL	SAGGITARIA LATIFOLIA	DUCK POTATO	2" PEAT POT OR BARE ROOT	4' O.C.		
6,550	EA	PA	POLYGANUM AMPHIBIUM	WATER SMARTWEED	2" PEAT POT OR BARE ROOT	2' O.C.		
3700	EA	SA	SCIRPUS ACUTUS	HARDSTEM BULRUSH	2" PEAT POT OR BARE ROOT	2' O.C.	4' O.C. WHEN MIXED W/NL	
4242	CUTTING	SS	SALIX SERICEA	SILKY WILLOW	12"	6' O.C.	UNROOTED CUTTING	
			WETLAND SEEDS					651.15
28.40	LB	SE	SECALE CEREALE	WINTER RYE	SEED	10 LB/ACRE		
2.25	LB	RB	NONE	NEW ENGLAND RUSH/BULRUSH MIX	SEED	1 LB/ACRE	SOLE SOURCE: *ST	

NOTE: ALL PLANTS TO BE OBTAINED FROM NURSERIES LOCATED IN NEW ENGLAND EXCEPT NEW ENGLAND RUSH/ BULRUSH MIX.
* ST = SOUTHERN TIER CONSULTING INC, P.O. BOX 30, WEST CLARKSVILLE NY 14786

APPROXIMATE SUMMARY OF QUANTITIES

QUANTITY	UNIT	ITEMS	ITEM NO.
5	EA	REMOVE SMALL TREES (MOD- DEAD TREES)	201.15
13602	CY	COMMON EXCAVATION	203.15
50	CY	SOLID ROCK EXCAVATION	203.16
28	YD	SAND BORROW (MOD-POTENTIAL TURTLE NESTING AREAS)	203.31
1	EA	REMOVAL OF STRUCTURE (MODIFIED)	529.15
10	MGAL	DUST CONTROL WITH WATER	609.10
1	EA	GUIDE POSTS (MOD-LOG BERM HEMLOCK OR HARDWOOD)	621.85
661	SY	GEOTEXTILE FOR SILT FENCE	649.51
3.8	LB	SEED (MOD.- NEW ENGLAND RUSH/BULRUSH MIX)	651.15
38	LB	SEED - (WINTER RYE)	651.17
9.5	T	HAY MULCH (MODIFIED)	651.25
2585	CY	TOPSOIL	651.35
125	SY	GRUBBING MATERIAL (MODIFIED)	651.40
400	SY	EROSION MATTING	654.10
8	EA	EVERGREEN TREES	656.20
21	EA	DECIDUOUS TREES	656.30
201	EA	DECIDUOUS SHRUBS	656.35
15466	EA	GROUNDCOVER AND VINES	656.40

NEW ENGLAND RUSH/BULRUSH SEED MIX

PERCENT BY NUMBER OF SEEDS (NOT BY WEIGHT)	BOTANICAL NAME	COMMON NAME
37.3%	JUNCUS EFFUSUS	SOFT RUSH
34.4%	SCIRPUS ATROVIRENS	DARK GREEN BULRUSH
26.9%	SCIRPUS CYPERINUS	WOOLGRASS
1.3%	SCIRPUS TABERNAEMONTANII	SOFT STEM BULRUSH
0.1%	SCIRPUS PUNGENS	THREE SQUARE BULRUSH

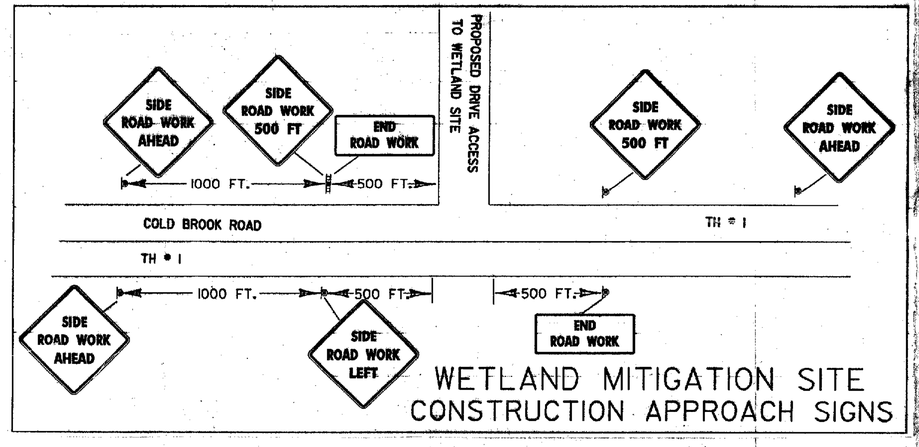

WETLAND MITIGATION SITE
CONSTRUCTION APPROACH SIGNS

PROPOSED WETLAND MITIGATION
QUANTITY SHEET

DATUM
VERTICAL _____
HORIZONTAL _____

PROJECT: SEARSBURG - WILMINGTON
PROJECT NO.: NHF 010-1(18)
DESIGN FILE NAME:
IPARM FILE NAME: ZD096QS
SURVEYED BY:
SQUAD LEADER: C. W. BRODIE
PLOT DATE: ****DATE****
SURVEY DATE:
DRAWN BY: K. R. KOLOSKI
SHEET: 1 OF 12

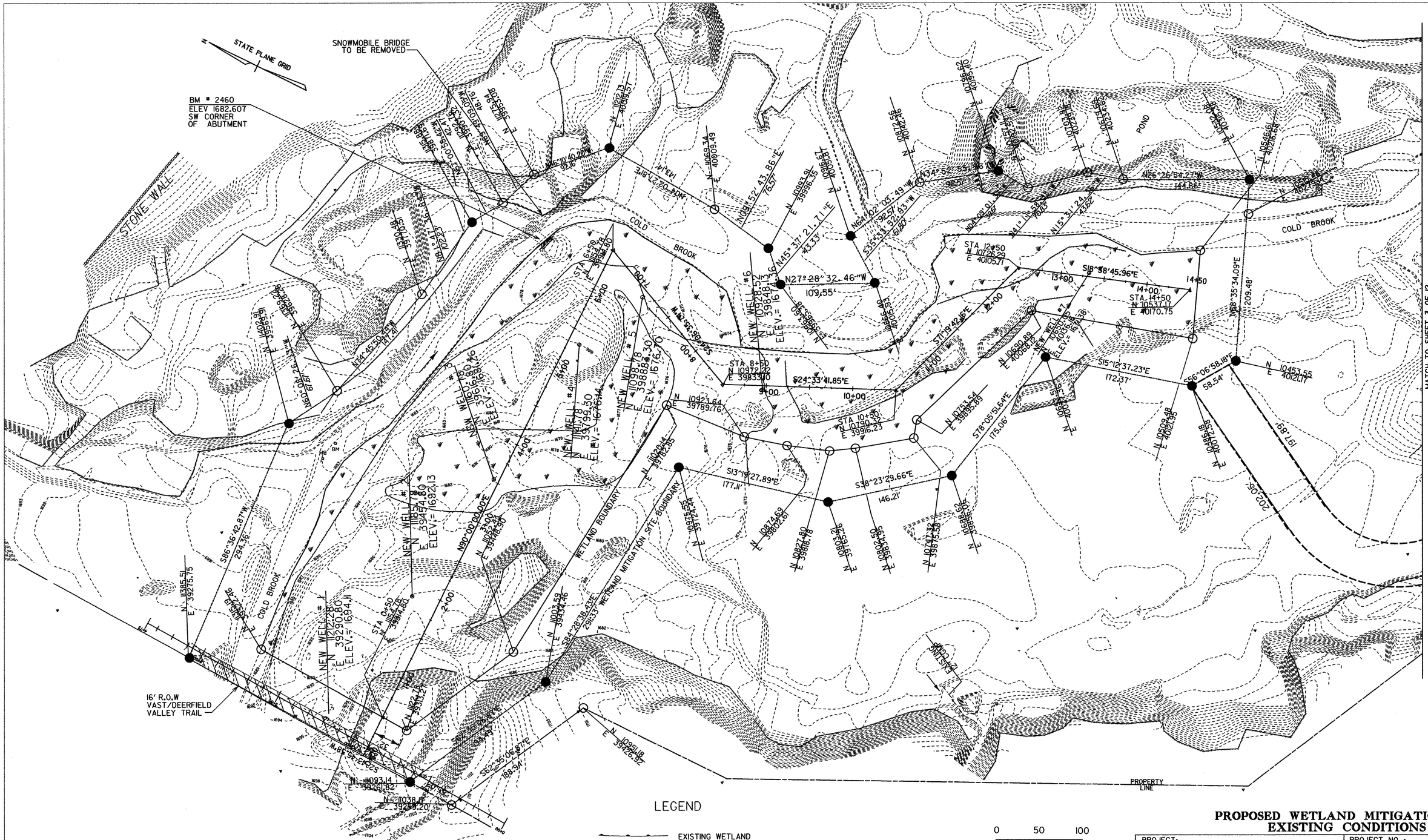

LEGEND

- EXISTING WETLAND
- WETLAND BOUNDARY = 5.03 ACRES
- WETLAND MITIGATION SITE PARCEL BOUNDARY = 9.57 ACRES
- ACCESS DRIVE = 0.92 ACRES
- N 11093.14 E 39261.82 — A BOUNDARY MARKER IS TO BE SET AT EACH POINT AS INDICATED BY FILLED CIRCLE

0 50 100
SCALE IN FEET

DATUM
VERTICAL NAVD 1988
HORIZONTAL NAD-83(92)

PROPOSED WETLAND MITIGATION EXISTING CONDITIONS

PROJECT: SEARSBURG - WILMINGTON	PROJECT NO.: NHF 010-1(18)
DESIGN FILE NAME: ZD096EXC.PLN	
IPARM FILE NAME:	PLOT DATE: 11/09/01
SURVEYED BY: RICHARD GILMAN	SURVEY DATE:
SQUAD LEADER: C. W. BRODIE	DRAWN BY: K.R.KOLOSKI
	SHEET: 2 OF 12

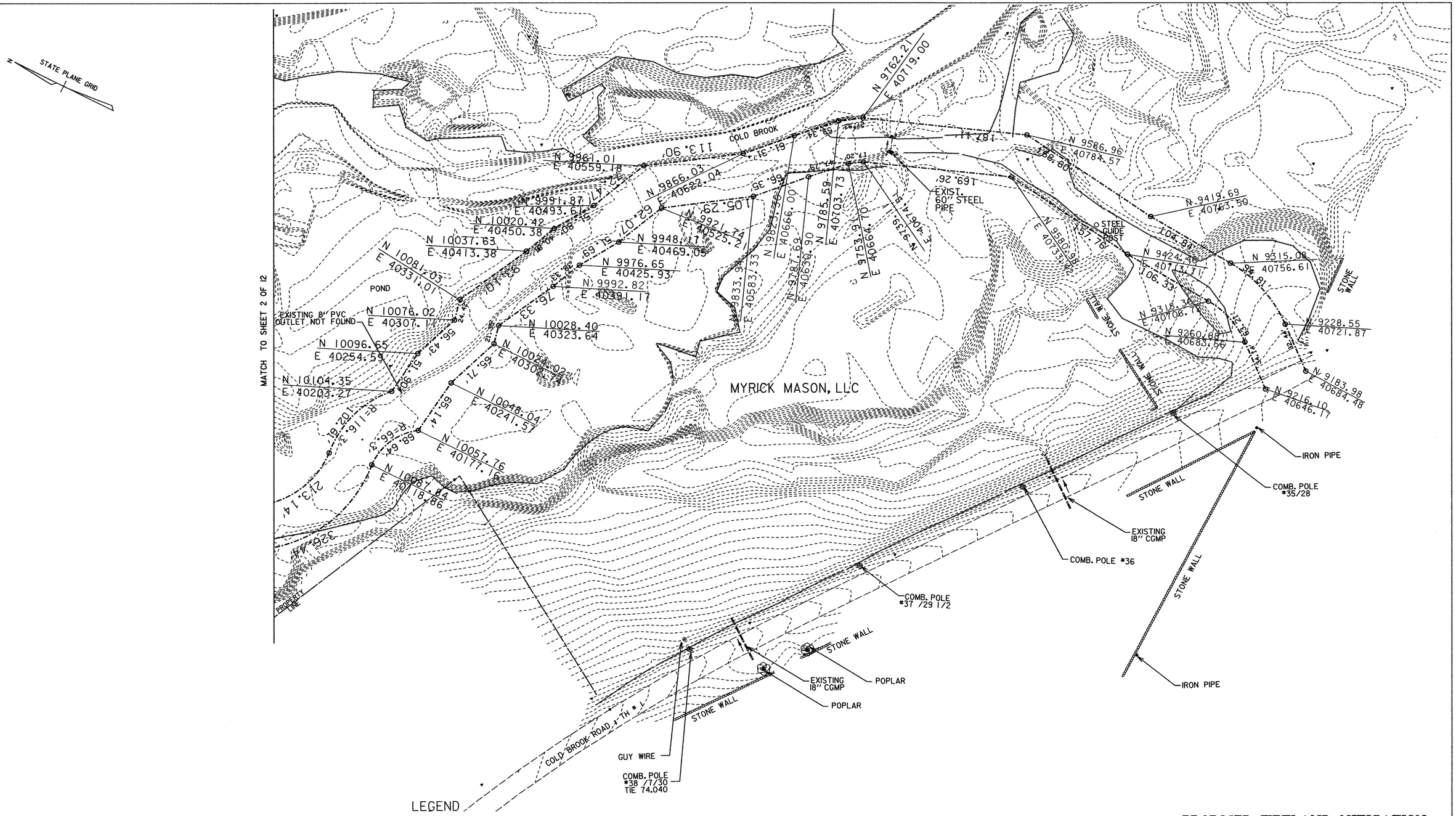

DATUM
VERTICAL NAVD 1988
HORIZONTAL NAD-83(92)

PROPOSED WETLAND MITIGATION EXISTING CONDITIONS

PROJECT: SEARSBURG - WILMINGTON		PROJECT NO.: NHF 010-1(18)	
DESIGN FILE NAME:	ZD096EXC. PLN		
IPARM FILE NAME:		PLOT DATE:	11/09/01
SURVEYED BY:	RICHARD GILMAN	SURVEY DATE:	
SQUAD LEADER:	C. W. BRODIE	DRAWN BY:	K. R. KOLOSKI
		SHEET:	3 OF 12

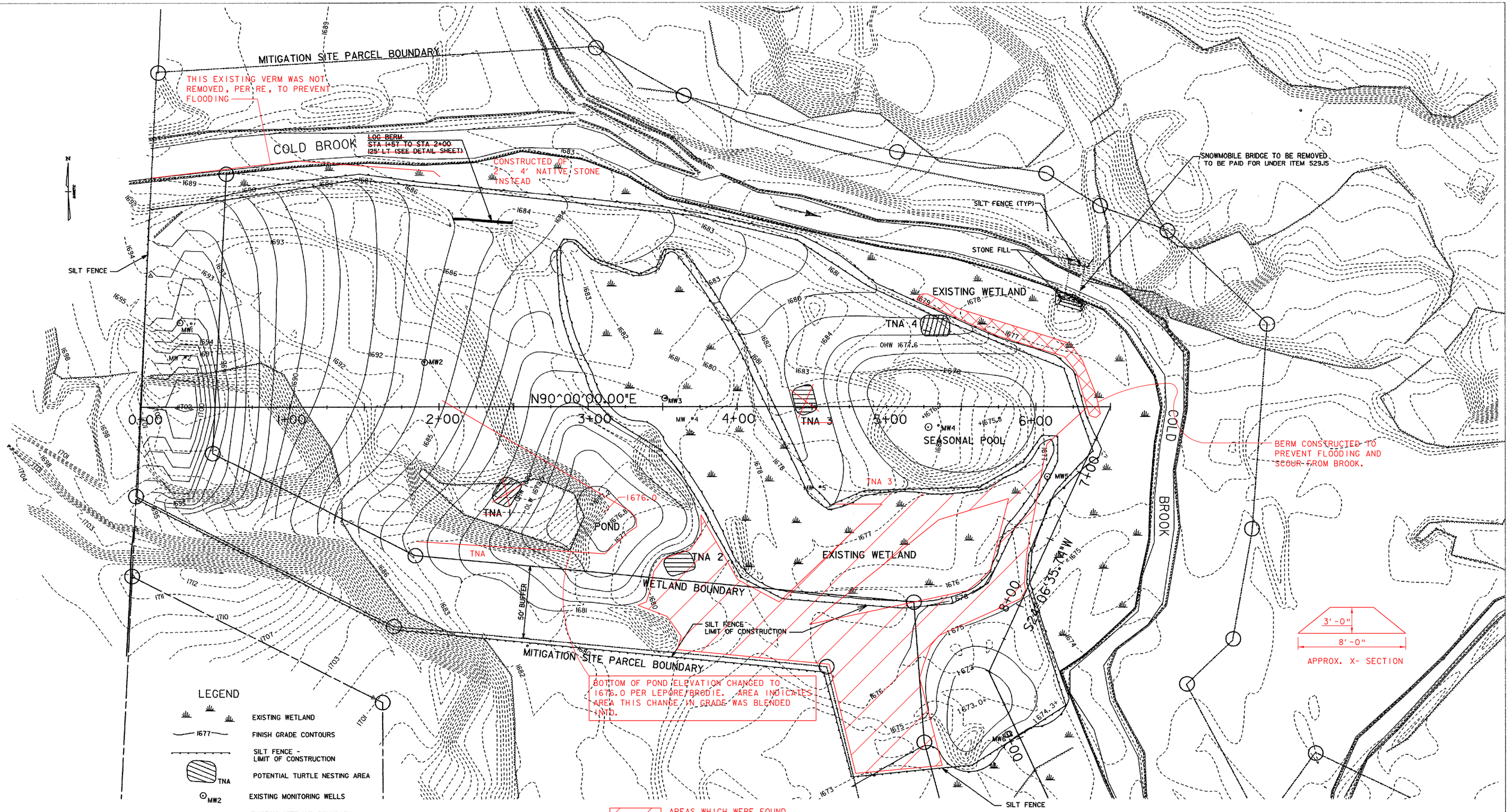

LEGEND

- EXISTING WETLAND
- 1677 — FINISH GRADE CONTOURS
- SILT FENCE - LIMIT OF CONSTRUCTION
- TNA — POTENTIAL TURTLE NESTING AREA
- MW2 — EXISTING MONITORING WELLS
- EXISTING WETLAND BOUNDARY

AREAS WHICH WERE FOUND TO BE DISTURBED, BUT NOT DESIGNATED FOR GRADING IN PLANS. THESES AREA WERE GRADED, TOPSOILED, SEEDED, AND MULCHED.

0 30 60
SCALE IN FEET

POTENTIAL TURTLE NESTING AREAS

	STATION	OFFSET (TO CENTER)
TNA 1	STA 2+47	60' RT
TNA 2	STA 3+35	105' RT
TNA 3	STA 4+45	5' LT
TNA 4	STA 5+35	55' LT

NOTES:

1. ALL NONEXISTING WETLAND AREAS WITHIN THE "WETLAND BOUNDARY" AND ALL DISTURBED AREAS BETWEEN THE "WETLAND BOUNDARY" AND THE "MITIGATION SITE BOUNDARY" SHALL BE TOPSOILED. A MINIMUM OF 6 INCHES SHALL BE APPLIED TO ALL AREAS TO BE TOPSOILED TO ACHIEVE FINISH GRADE.
2. ALL MONITORING WELLS ARE TO REMAIN UNDISTURBED.
3. TURTLE NESTING AREAS TO BE PAID FOR UNDER ITEM 203.31.

DATUM
VERTICAL NAVD 1988
HORIZONTAL NAD-83(92)

PROPOSED WETLAND MITIGATION GRADING PLAN

PROJECT: SEARSBURG - WILMINGTON
PROJECT NO.: NHF 010-1(18)
DESIGN FILE NAME: ZD096-004.DGN
IPARM FILE NAME:
SURVEYED BY: RICHARD GILMAN
SQUAD LEADER: C. W. BRODIE
PLOT DATE: $$$$DATE$$$
SURVEY DATE:
DRAWN BY: K.R.KOLOSKI
SHEET: 4 OF 12

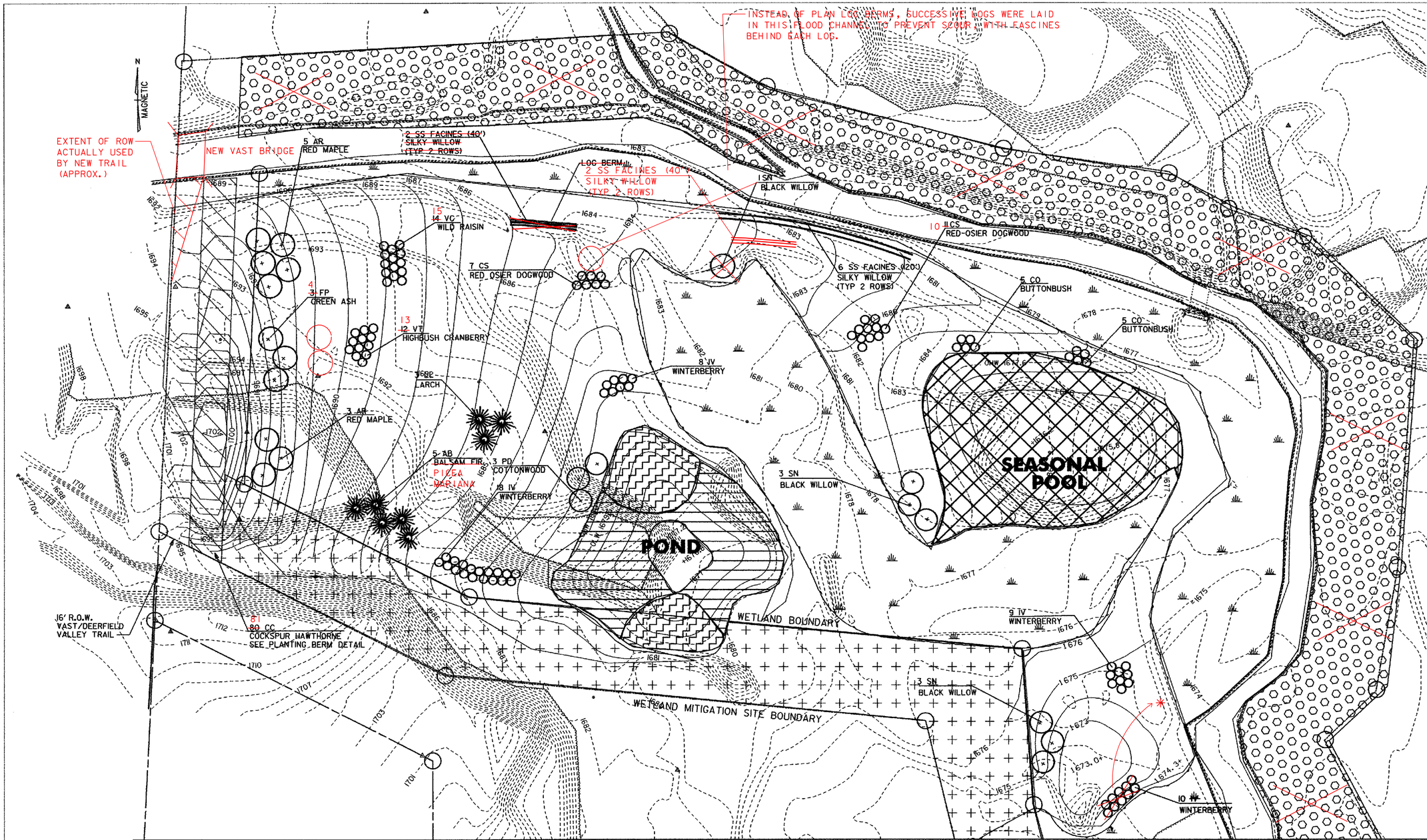

LEGEND

- 1677 — FINISH GRADE CONTOURS
- EXISTING WETLAND BOUNDARY
- SL-WITHIN LIMITS OF POND SL = DUCK POTATO + SEE BELOW
- SA-WITHIN LIMITS OF POND (EL 1677.0 TO EL 1680.0) SA = HARDSTEM BULRUSH
- PA - WITHIN LIMITS OF SEASONAL POOL (EL 1676.0 TO EL 1678.0) PA = WATER SMARTWEED
- AREA TO BE PLANTED WITH SALIX SERICEA CUTTINGS
- AREA TO BE PLANTED WITH SALIX SERICEA CUTTINGS AND RUSH/BULRUSH-WINTER RYE SEED MIX * SEE NEXT SHEET
- EVERGREEN TREE
- DECIDUOUS TREE
- DECIDUOUS SHRUBS
- 5 LL — PLANT TYPE & QUANTITY (REFER TO QUANTITY SHEET-2)

POND:
OHW = 1680.0, 3' DEPTH OF WATER
LW = 1679.5, 2.5' DEPTH OF WATER

SEASONAL POOL:
OHW = 1677.6, 1.6' DEPTH OF WATER
LW = 1675.0, WATER 1' BELOW SURFACE

NOTES:

1. THE FOLLOWING AREAS ARE TO BE SEEDED WITH THE NEW ENGLANDRUSH/BULRUSH SEED MIX AND WINTER RYE AND MULCHED WITH STRAW AS DIRECTED BY THE ENGNEER:
   ALL DISTURBED AREAS WITH THE EXCEPTION OF THE POND, SEASONAL POOL, THE EXISTING WETLAND AREAS, AND A 16' VAST/DEERFIELD VALLEY TRAIL RIGHT-OF-WAY
   THE 20' WIDE PLANTING BERM, OUTSIDE OF MULCHED SHRUB PLANTING POCKETS.
   THE NOTHERN AND EASTERN MITIGATION SITE BUFFER (SHOWN IN DOTS)
2. AREAS TO RECEIVE FINAL PLANTING DURING THE SECOND YEAR OF CONSTRUCTION (POND & SEASONAL POOL) SHALL BE SEEDED WITH WINTER RYE IMMEDIATELY FOLLOWING FINAL GRADING, OR AS DIRECTED BY THE ENGINEER.

* STANDING WATER IN PLAN LOCATION

+ DUCK POTATO WAS NOT PLANTED AS CLOSE TO THE MIDDLE OF THE POND AS INDICATED ON PLANS. AREA PLANTED WAS FROM SHORELINE TO 1.5' WATER DEPTH, IN A RING AROUND THE ENTIRE POND.

0 30 60
SCALE IN FEET

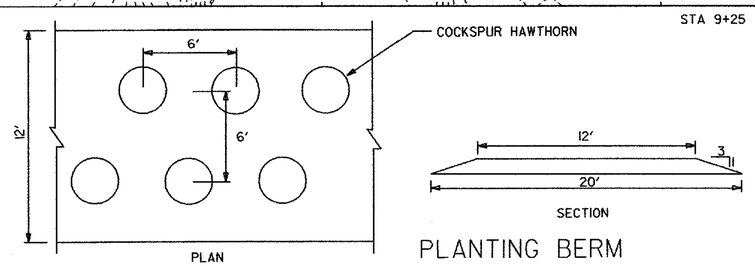

PLANTING BERM

DATUM
VERTICAL NAVD 1988
HORIZONTAL NAD-83(92)

PROPOSED WETLAND MITIGATION LANDSCAPE PLAN

PROJECT: SEARSBURG - WILMINGTON	PROJECT NO.: NHF 010-1(18)
DESIGN FILE NAME: ZD096-005	
IPARM FILE NAME:	PLOT DATE: 11/09/01
SURVEYED BY: RICHARD GILMAN	SURVEY DATE:
SQUAD LEADER: C. W. BRODIE	DRAWN BY: K.R.KOLOSKI
	SHEET: 5 OF 12

SHEET 323 OF 435

STA 9+25

MATCH TO SHEET 5 of 12

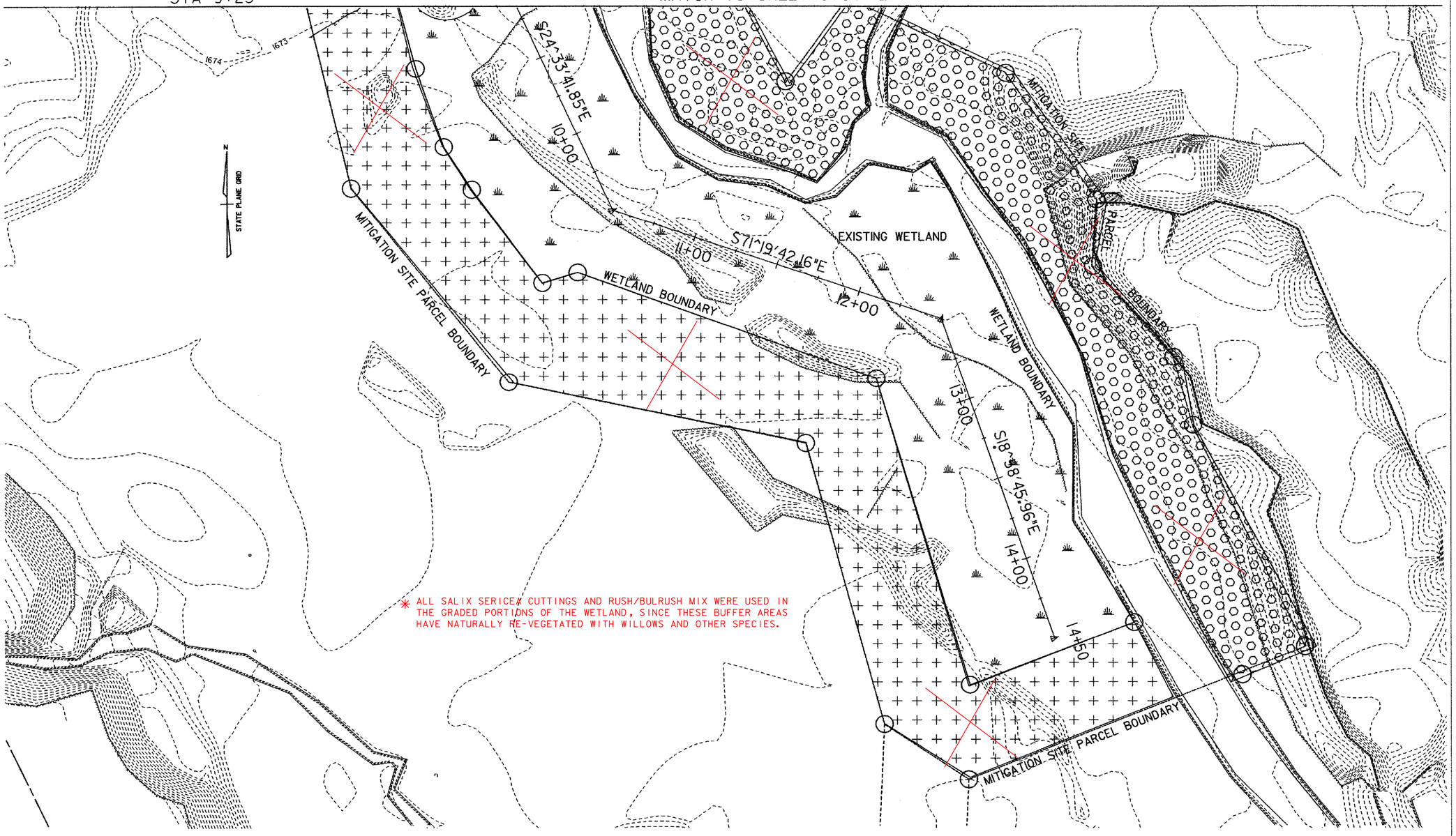

LEGEND

1677	FINISH GRADE CONTOURS
	EXISTING WETLAND BOUNDARY
	WETLAND SYMBOL
+ + + + + +	AREA TO BE PLANTED WITH SALIX SERICEA CUTTINGS
	AREA TO BE PLANTED WITH SALIX SERICEA CUTTINGS AND RUSH/BULRUSH-WINTER RYE SEED MIX

NOTES:

1. THE FOLLOWING AREAS ARE TO BE SEEDED WITH THE NEW ENGLANDRUSH/BULRUSH SEED MIX AND WINTER RYE AND MULCHED WITH STRAW AS DIRECTED BY THE ENGNEER:

   ALL DISTURBED AREAS WITH THE EXCEPTION OF THE POND,SEASONAL POOL, THE EXISTING WETLAND AREAS, AND A 16' VAST/ DEERFIELD VALLEY TRAIL RIGHT-OF-WAY

   THE 20' WIDE PLANTING BERM, OUTSIDE OF MULCHED SHRUB PLANTING POCKETS.

   THE NOTHERN AND EASTERN MITIGATION SITE BUFFER (SHOWN IN DOTS)

2. AREAS TO RECEIVE FINAL PLANTING DURING THE SECOND YEAR OF CONSTRUCTION (POND & SEASONAL POOL) SHALL BE SEEDED WITH WINTER RYE IMMEDIATELY FOLLOWING FINAL GRADING, OR AS DIRECTED BY THE ENGINEER.

* ALL SALIX SERICEA CUTTINGS AND RUSH/BULRUSH MIX WERE USED IN THE GRADED PORTIONS OF THE WETLAND, SINCE THESE BUFFER AREAS HAVE NATURALLY RE-VEGETATED WITH WILLOWS AND OTHER SPECIES.

0 30 60

SCALE IN FEET

DATUM
VERTICAL NAVD 1988
HORIZONTAL NAD-83(92)

PROPOSED WETLAND MITIGATION LANDSCAPE PLAN

PROJECT: SEARSBURG - WILMINGTON	PROJECT NO.: NHF 010-1(18)
DESIGN FILE NAME: ZD096-006.DGN	PLOT DATE: 11/09/01
IPARM FILE NAME:	SURVEY DATE:
SURVEYED BY: RICHARD GILMAN	DRAWN BY: K.R.KOLOSKI
SQUAD LEADER: C.W. BRODIE	SHEET: 6 OF 12

SHEET 324 OF 435

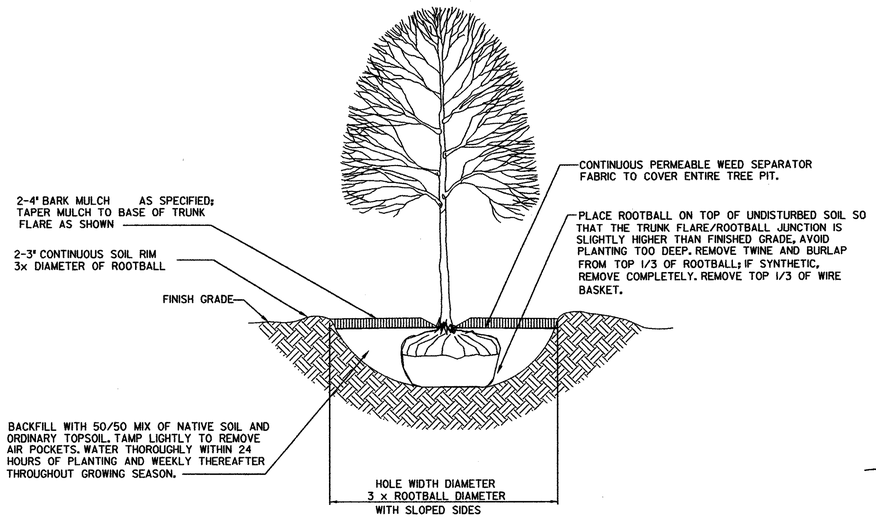

DECIDUOUS TREE PLANTING DETAIL
NOT TO SCALE

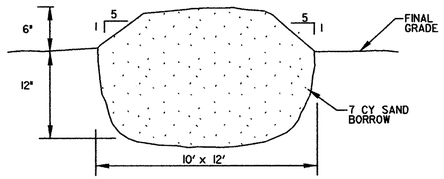

POTENTIAL TURTLE NESTING AREA DETAIL
NOT TO SCALE

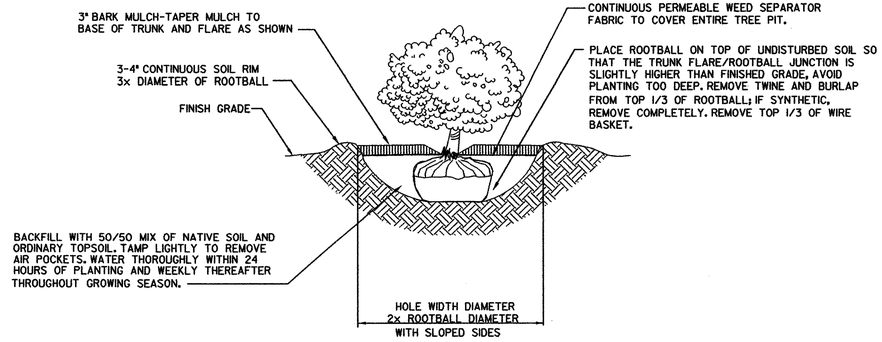

SHRUB PLANTING DETAIL
NOT TO SCALE

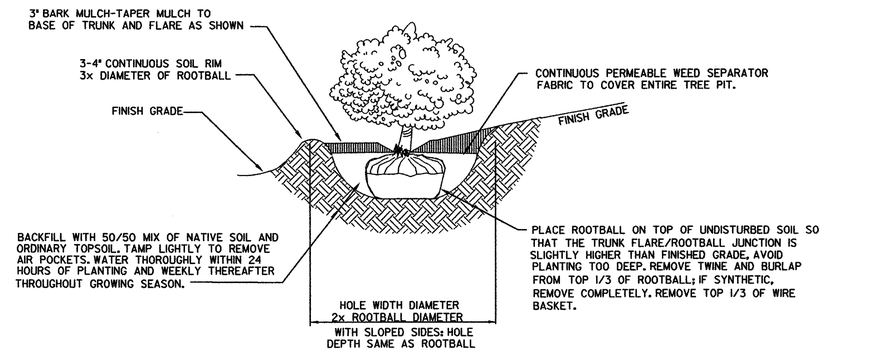

SHRUB PLANTING ON SLOPES DETAIL
NOT TO SCALE

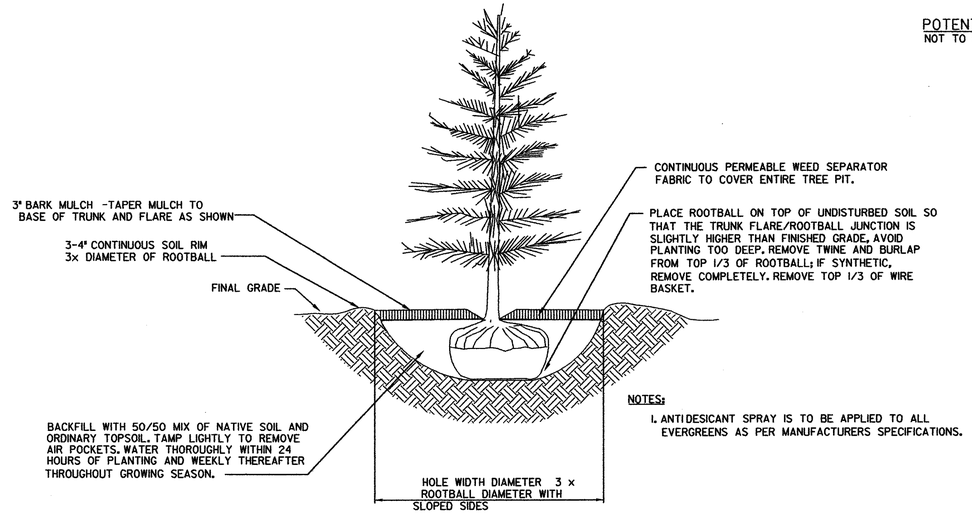

NOTES:
1. ANTIDESICANT SPRAY IS TO BE APPLIED TO ALL EVERGREENS AS PER MANUFACTURERS SPECIFICATIONS.

EVERGREEN TREE PLANTING DETAIL
NOT TO SCALE

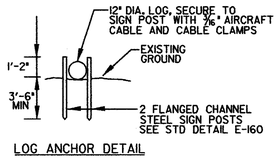

LOG ANCHOR DETAIL

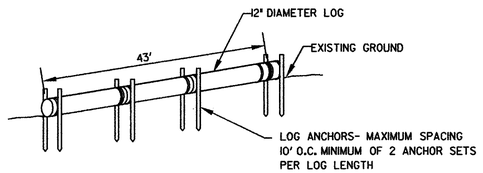

LOG PLACEMENT DETAIL

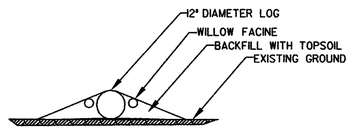

PLANTING DETAIL

LOG BERM DETAIL
NOT TO SCALE

DATUM
VERTICAL _____
HORIZONTAL _____

PROPOSED WETLAND MITIGATION
LANDSCAPE DETAILS

PROJECT: SEARSBURG - WILMINGTON		PROJECT NO.: NHF 010-1(18)
DESIGN FILE NAME:		
IPARM FILE NAME:	ZD096DET	PLOT DATE: 11/09/01
SURVEYED BY:		SURVEY DATE:
SQUAD LEADER:	C. W. BRODIE	DRAWN BY: K. R. KOLOSKI
		SHEET: 7 OF 12

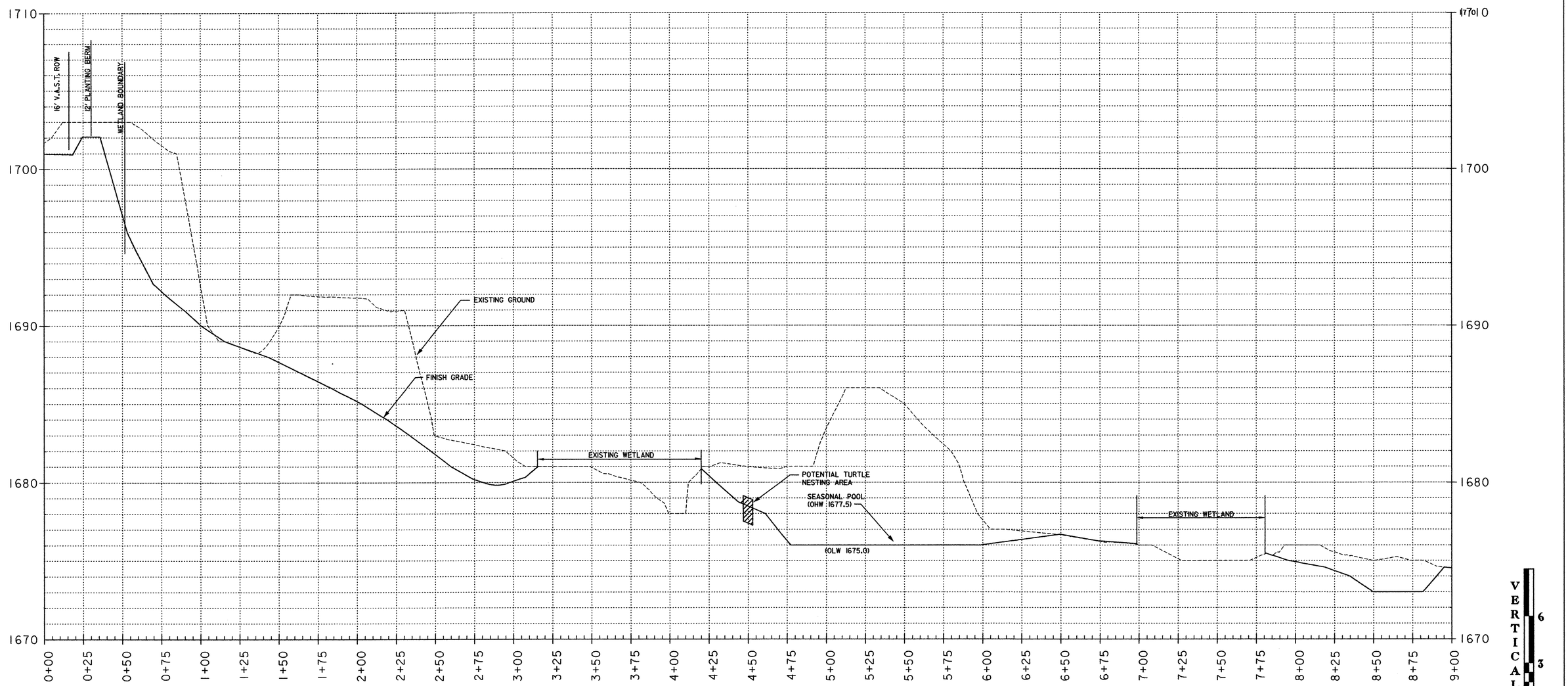

PROFILE

DATUM
VERTICAL _____
HORIZONTAL _____

PROJECT: SEARSBURG - WILMINGTON	PROJECT NO.: NHF 010-1(18)
DESIGN FILE NAME:	
IPARM FILE NAME: DD096XS1.DGN	PLOT DATE: 11/09/01
SURVEYED BY:	SURVEY DATE:
SQUAD LEADER: C. W. BRODIE	DRAWN BY: K. R. KOLOSKI
	SHEET: 8 OF 12

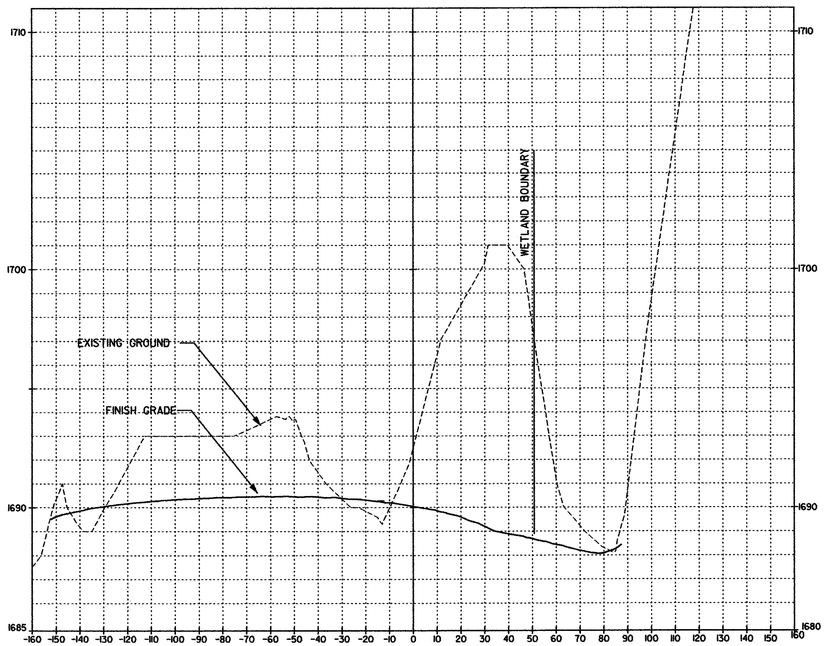

1+00

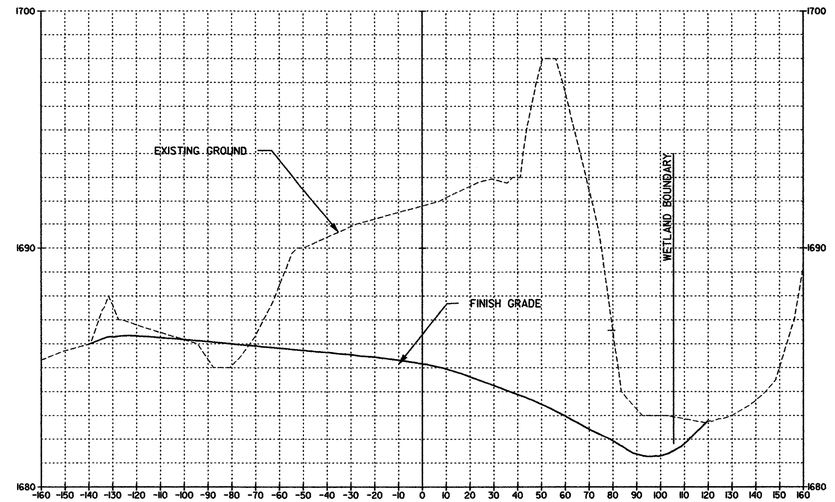

2+00

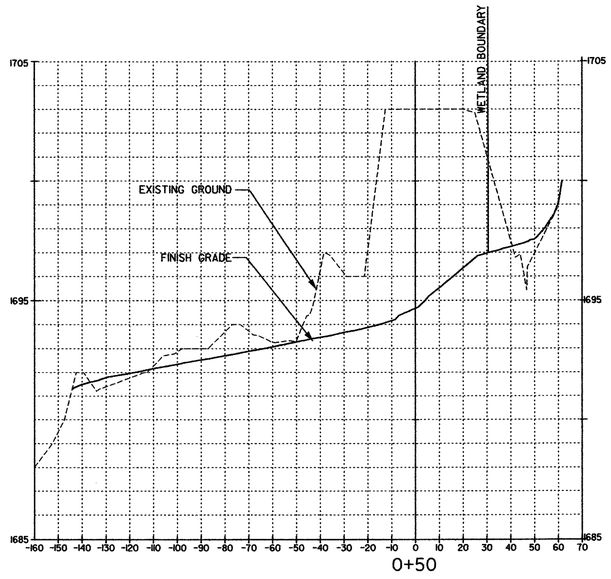

0+50

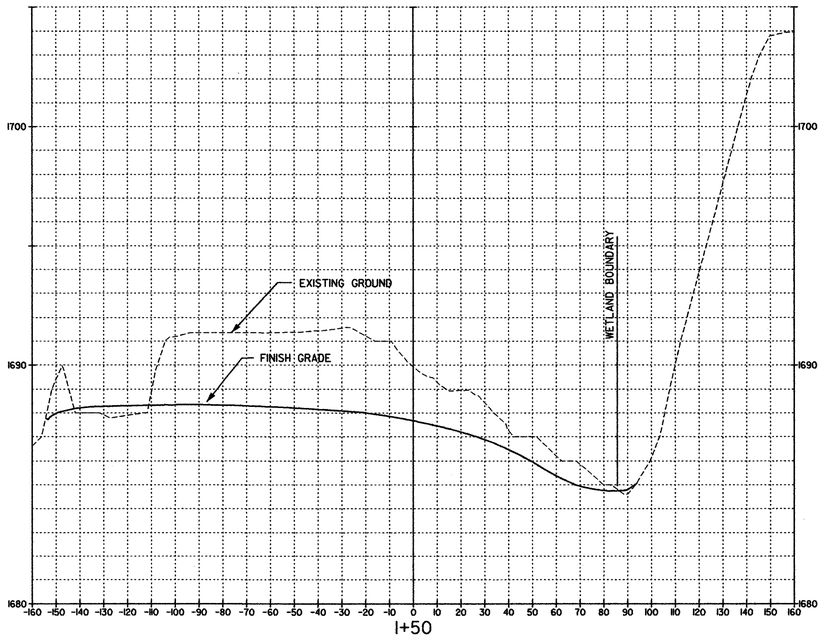

1+50

VERTICAL 0 3 6

HORIZONTAL 0 30 60 120

SCALE IN FEET

SECTIONS 0+50 TO 2+00

DATUM
VERTICAL _____
HORIZONTAL _____

PROJECT: SEARSBURG - WILMINGTON	PROJECT NO.: NHF 010-1(18)
DESIGN FILE NAME:	
IPARM FILE NAME: DD096XS1.DGN	PLOT DATE: 11/09/01
SURVEYED BY:	SURVEY DATE:
SQUAD LEADER: C. W. BRODIE	DRAWN BY: K. R. KOLOSKI
	SHEET: 9 OF 12

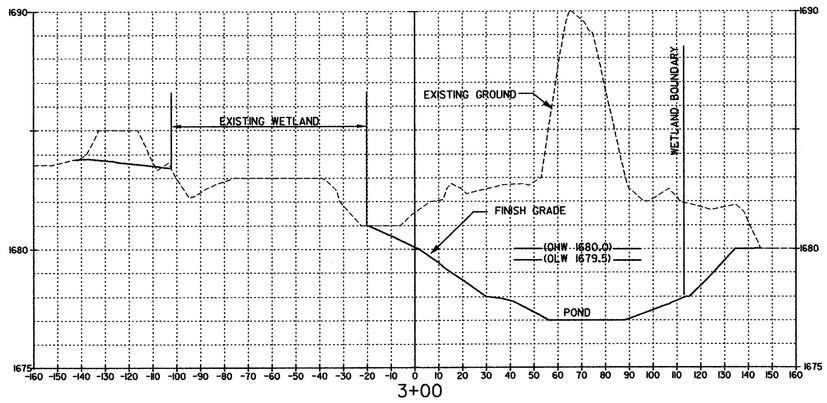

3+00

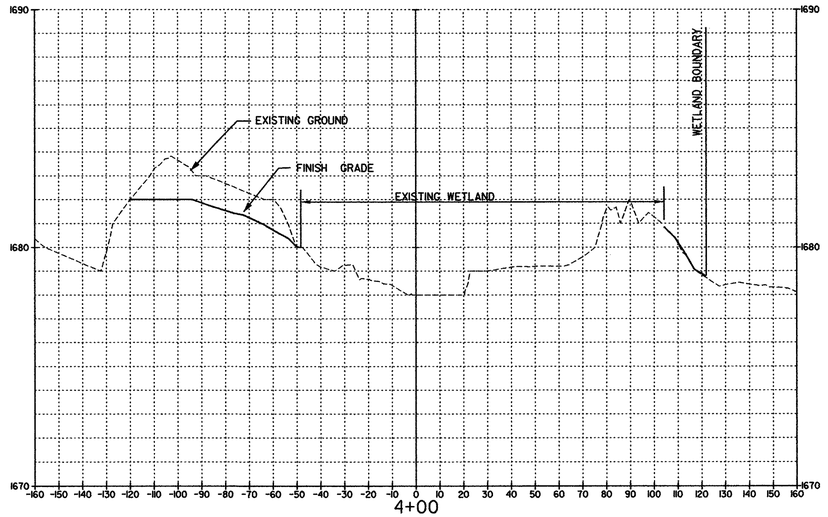

4+00

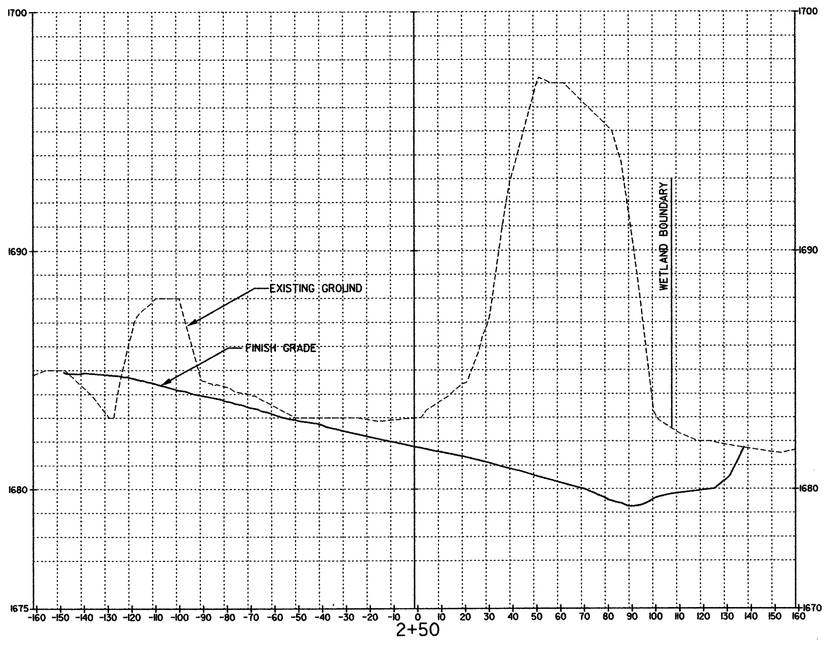

2+50

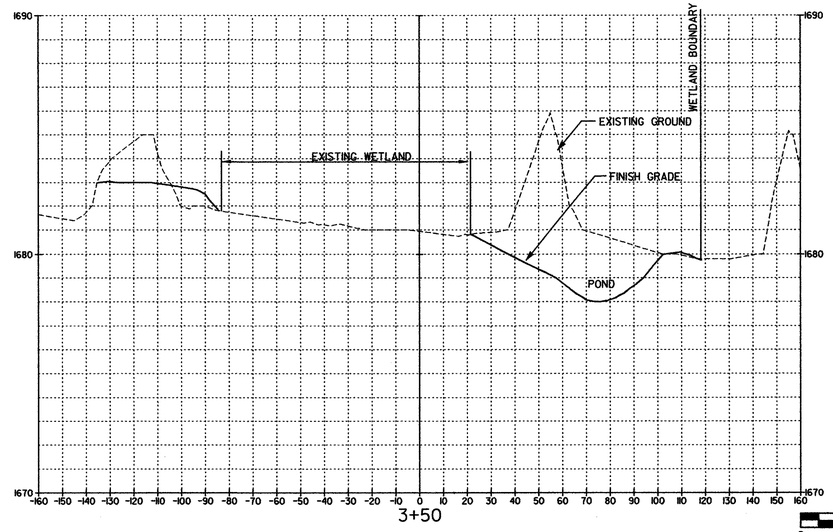

3+50

VERTICAL 6 3 0
HORIZONTAL
0 30 60 120
SCALE IN FEET

DATUM
VERTICAL _____
HORIZONTAL _____

SECTIONS 2+50 TO 4+00

PROJECT: SEARSBURG - WILMINGTON	PROJECT NO.: NHF 010-1(18)
DESIGN FILE NAME:	
IPARM FILE NAME: DD096XS1.DGN	PLOT DATE: 11/09/01
SURVEYED BY:	SURVEY DATE:
SQUAD LEADER: C. W. BRODIE	DRAWN BY: K. KOLOSKI
	SHEET: 10 OF 12

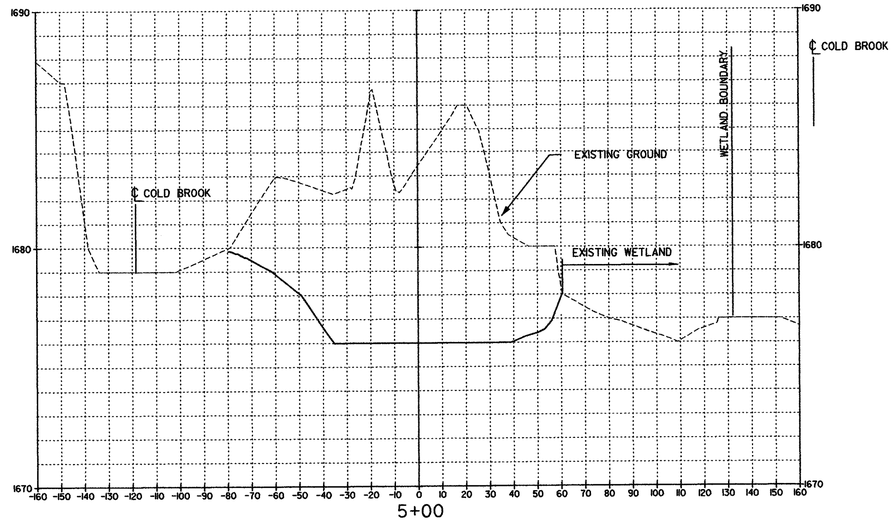

5+00

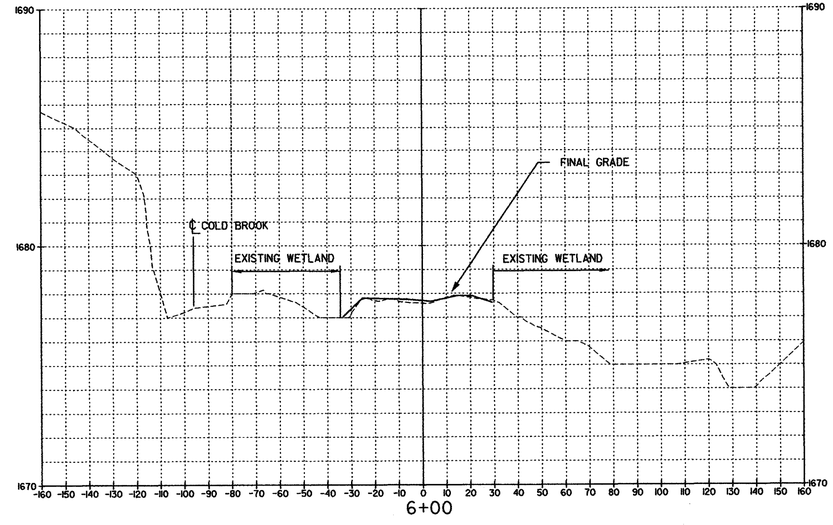

6+00

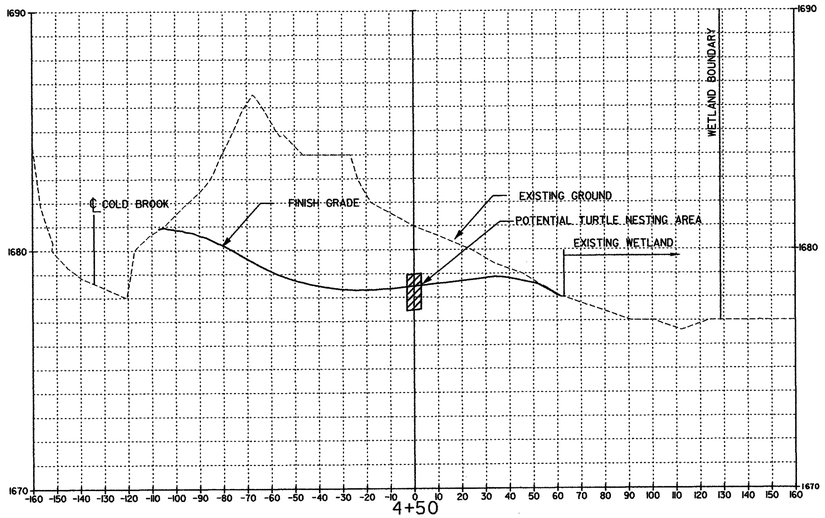

4+50

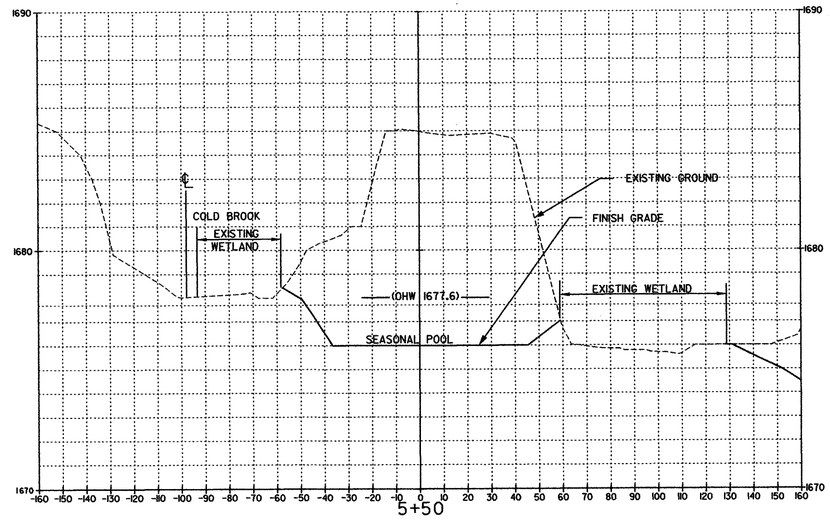

5+50

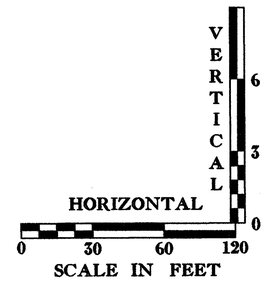

SECTIONS 4+50 TO 6+00

DATUM
VERTICAL _____
HORIZONTAL _____

PROJECT: SEARSBURG - WILMINGTON	PROJECT NO.: NHF 010-1(18)
DESIGN FILE NAME:	
IPARM FILE NAME: DD096XS1.DGN	PLOT DATE: 11/09/01
SURVEYED BY:	SURVEY DATE:
SQUAD LEADER: C. W. BRODIE	DRAWN BY: K. R. KOLOSKI
	SHEET: 11 OF 12

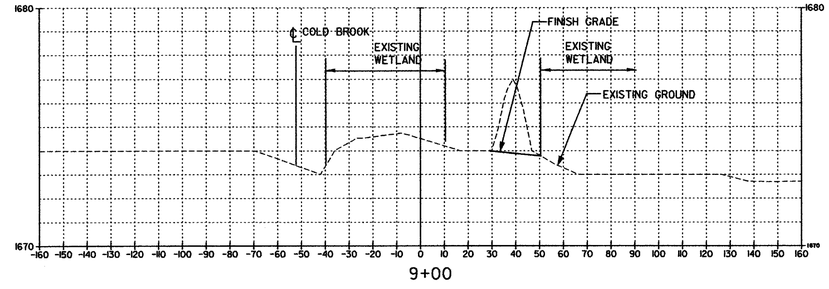

9+00

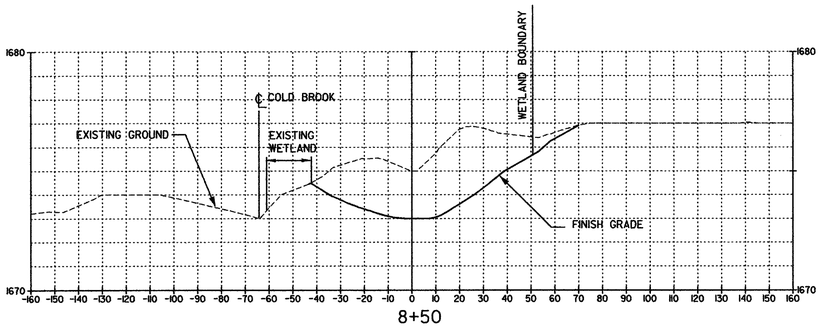

8+50

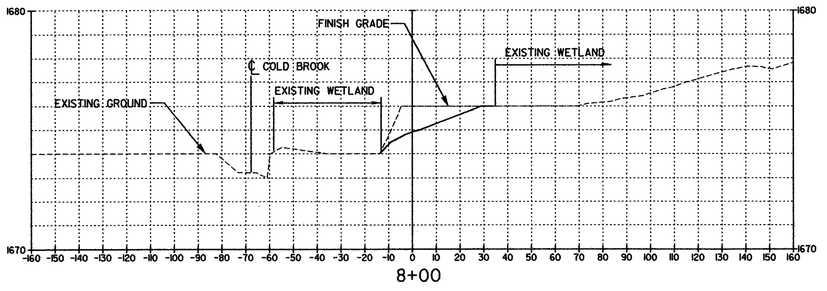

8+00

SECTIONS 8+00 TO 9+00

VERTICAL 6 3 0

HORIZONTAL 0 30 60 120

SCALE IN FEET

DATUM
VERTICAL _____
HORIZONTAL _____

PROJECT: SEARSBURG - WILMINGTON
PROJECT NO.: NHF 010-1(18)

DESIGN FILE NAME:
IPARM FILE NAME: DD096XS1.DGN
SURVEYED BY:
SQUAD LEADER: C. W. BRODIE

PLOT DATE: 11/09/01
SURVEY DATE:
DRAWN BY: K. KOLOSKI
SHEET: 12 OF 12

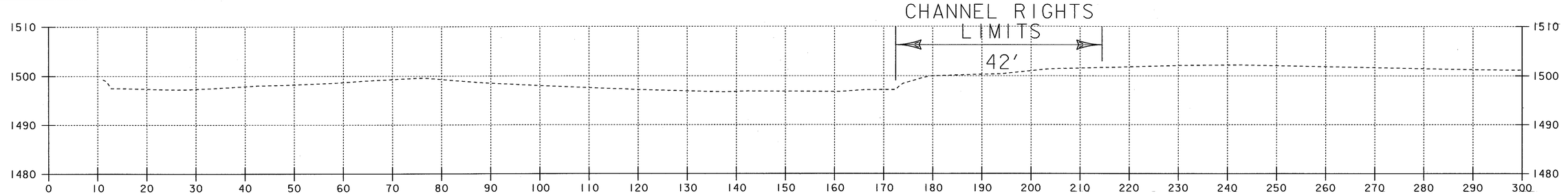

226+50
C. L.

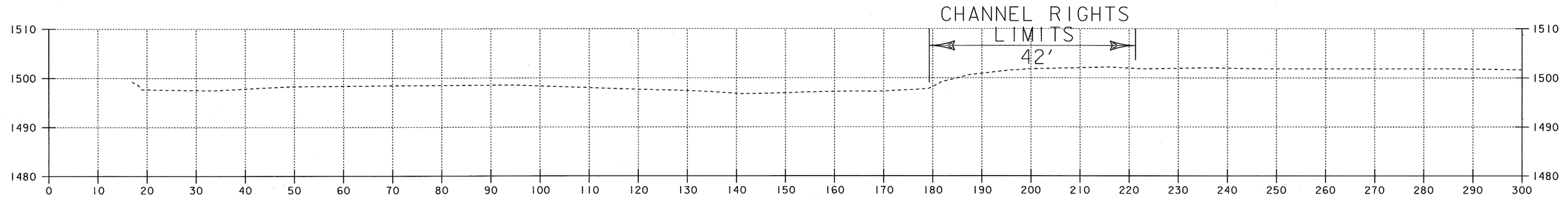

226+00
C. L.

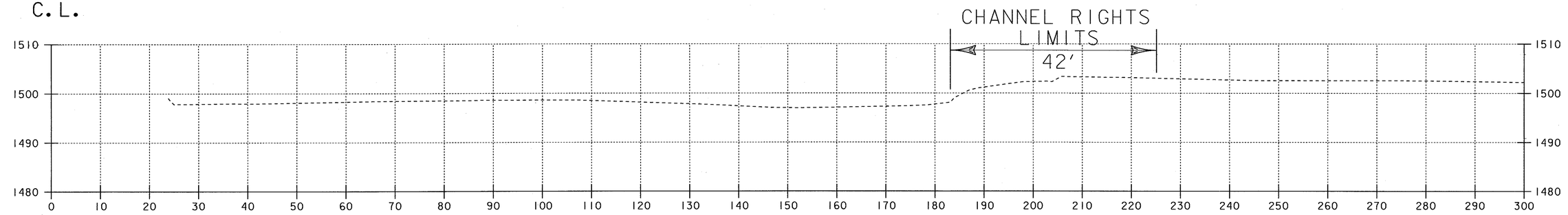

225+50
C. L.

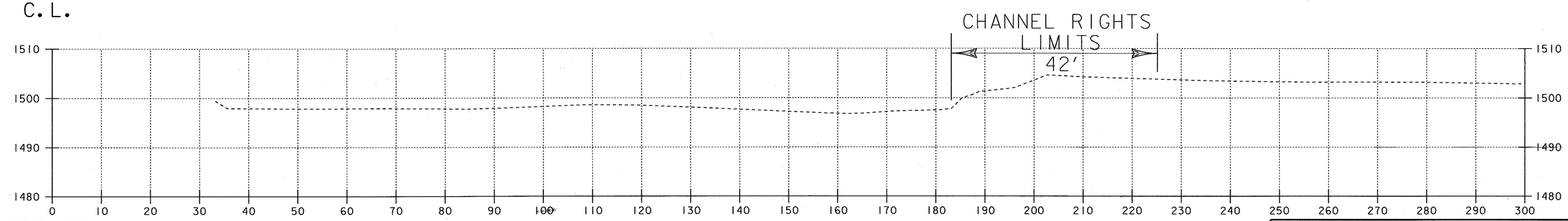

225+00
C. L.

CHANNEL RIGHTS CROSS SECTIONS

0 10 20
SCALE IN FEET

PROJECT NAME:	SEARSBURG - WILMINGTON
PROJECT NUMBER:	NHF 010-1(18)
PLOT FILE NAME: DD096CRI	PLOT DATE: 31-JUL-2001
PROJECT LEADER: DELLA SANTA	DRAWN BY: SQUAD B
DESIGN FILE NAME: 78D096/DESIGN/DD096CWRK.DGN:	
	SHEET 331 OF 435

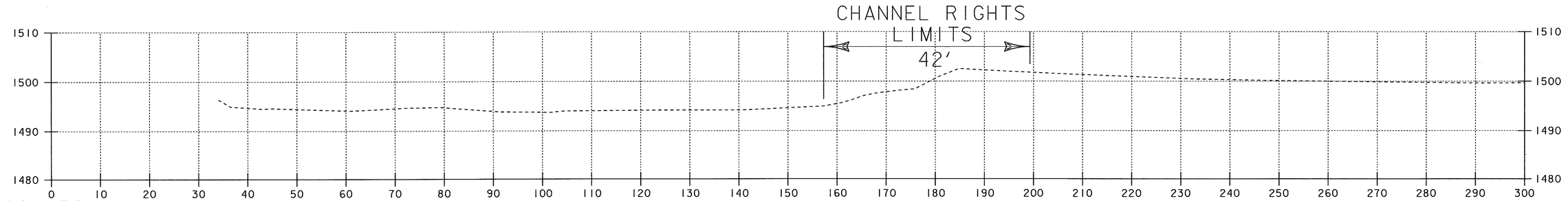

228+50
C. L.

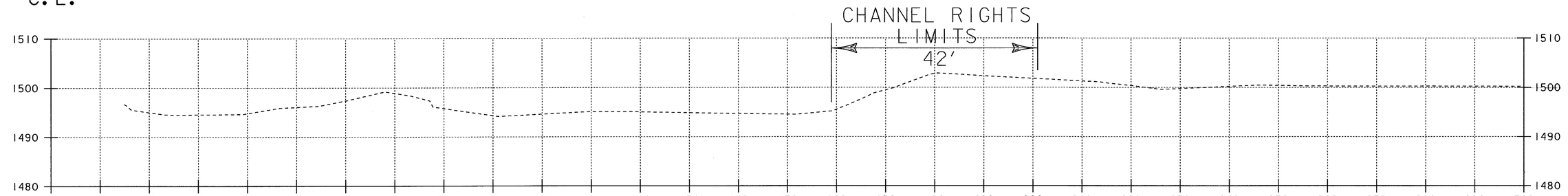

228+00
C. L.

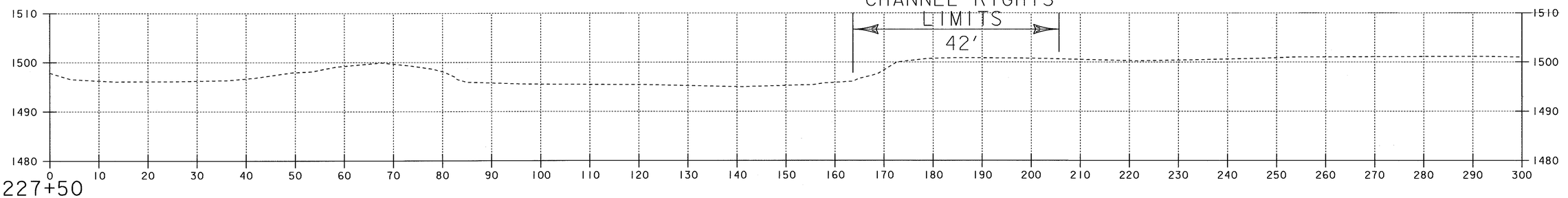

227+50
C. L.

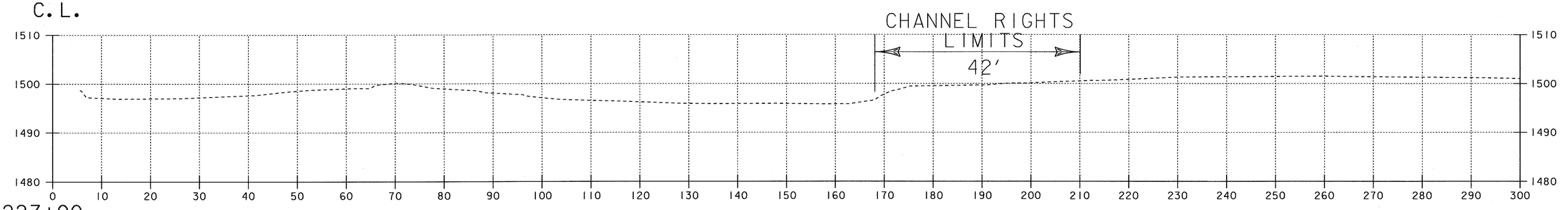

227+00
C. L.

CHANNEL RIGHTS CROSS SECTIONS

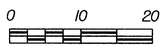

PROJECT NAME: SEARSBURG - WILMINGTON
PROJECT NUMBER: NHF 010-1(18)

PLOT FILE NAME: DD096CR2
PLOT DATE: 31-JUL-2001
PROJECT LEADER: DELLA SANTA
DRAWN BY: SQUAD B
DESIGN FILE NAME: 78D096/DESIGN/DD096CWRK.DGN:
SHEET 332 OF 435

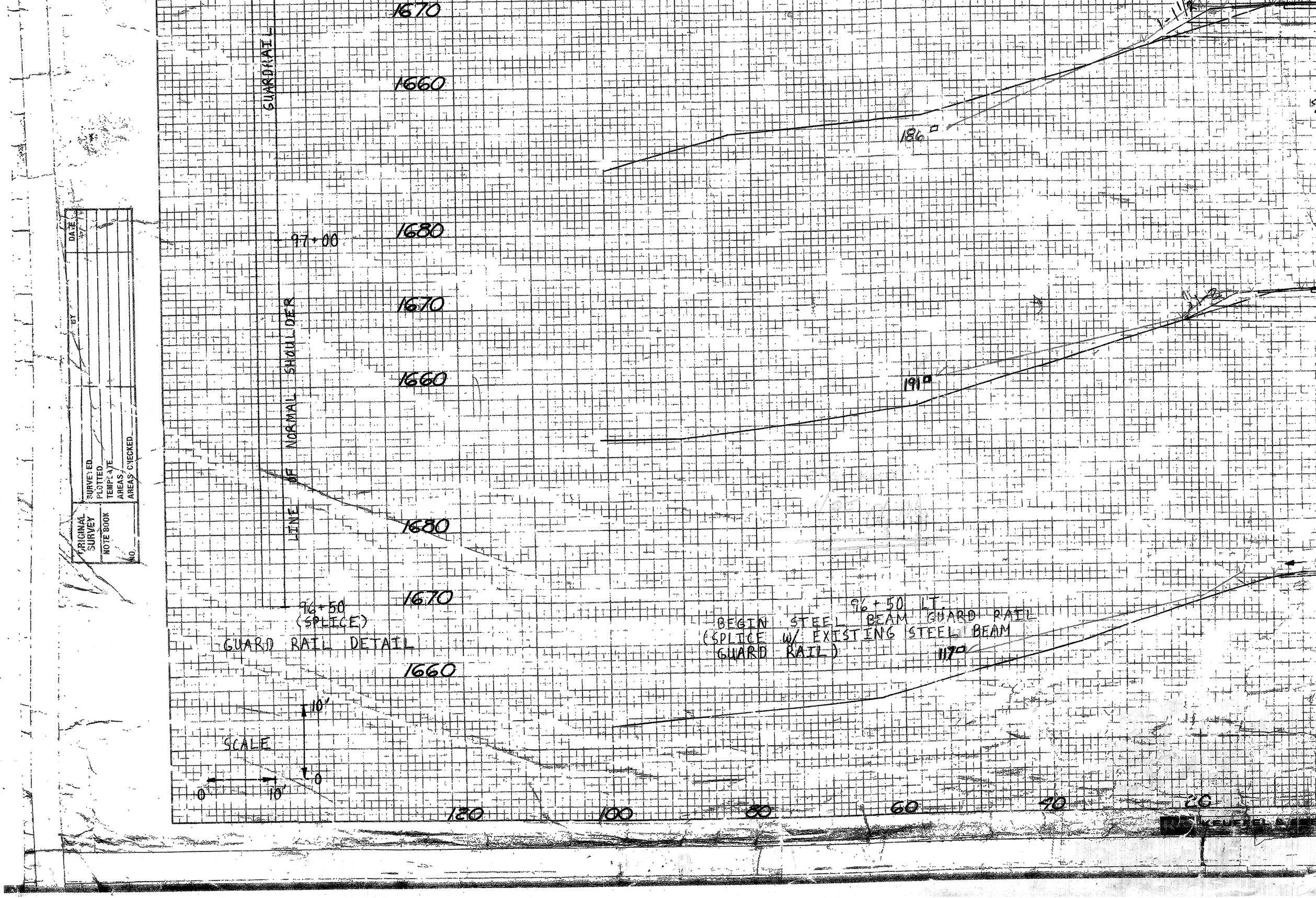

1670
1660
1680
1670
1660
1680
1670
1660
GUARDRAIL
97+00
LINE OF NORMAL SHOULDER
96+50
(SPLICE)
GUARD RAIL DETAIL
186
191
117
96+50 LT.
BEGIN STEEL BEAM GUARD RAIL
(SPLICE W/ EXISTING STEEL BEAM
GUARD RAIL)
SCALE
10'
0
0
10'
120
100
80
60
40
20
ORIGINAL SURVEY
NOTE BOOK
NO.
SURVEYED
PLOTTED
TEMPLATE
AREAS
AREAS CHECKED
BY
DATE

1670

1660

1680

1670

1660

1680

1670

1660

1680

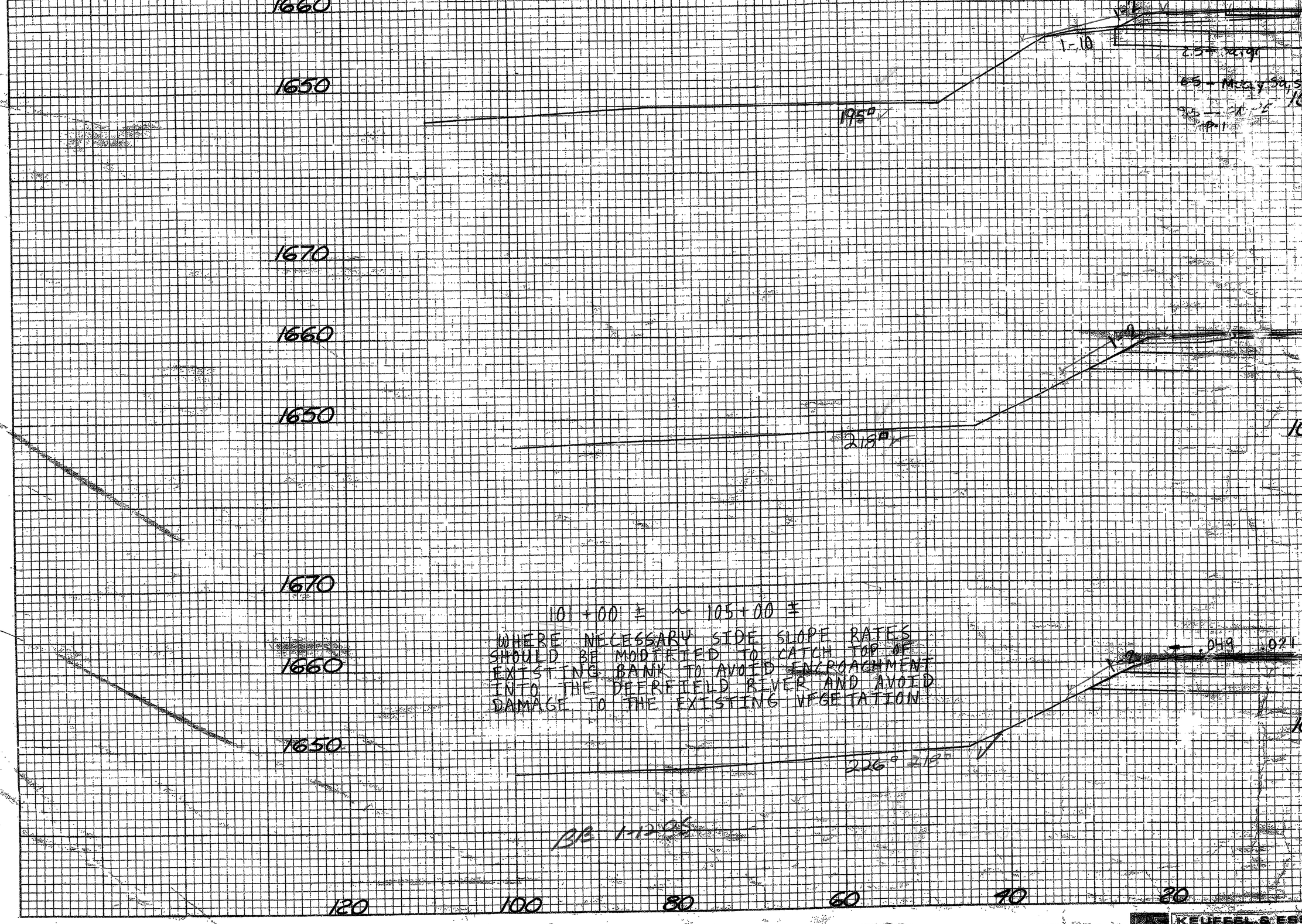

ORIGINAL SURVEY
NOTE BOOK
NO.
SURVEYED
PLOTTED
TEMPLATE
AREAS
AREAS CHECKED
BY
DATE

1660

1650

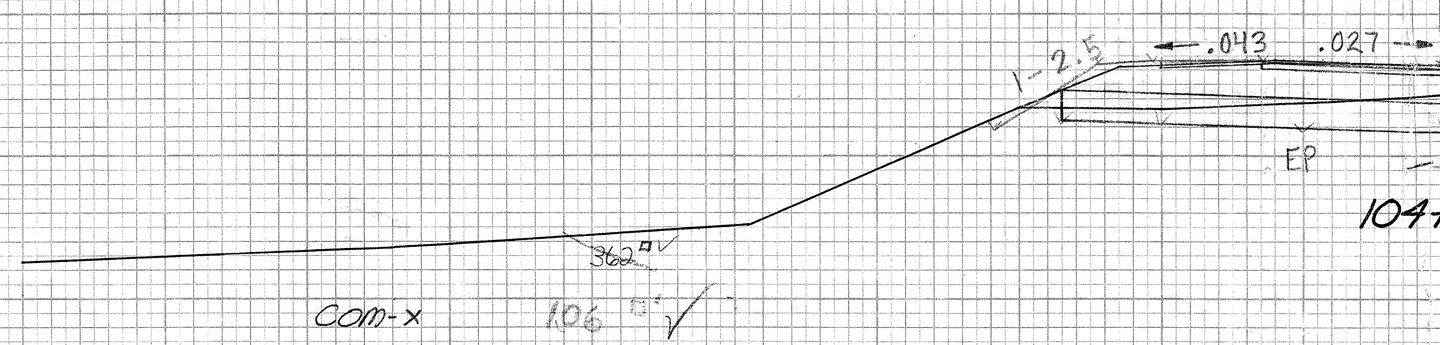

1670

1660

1650

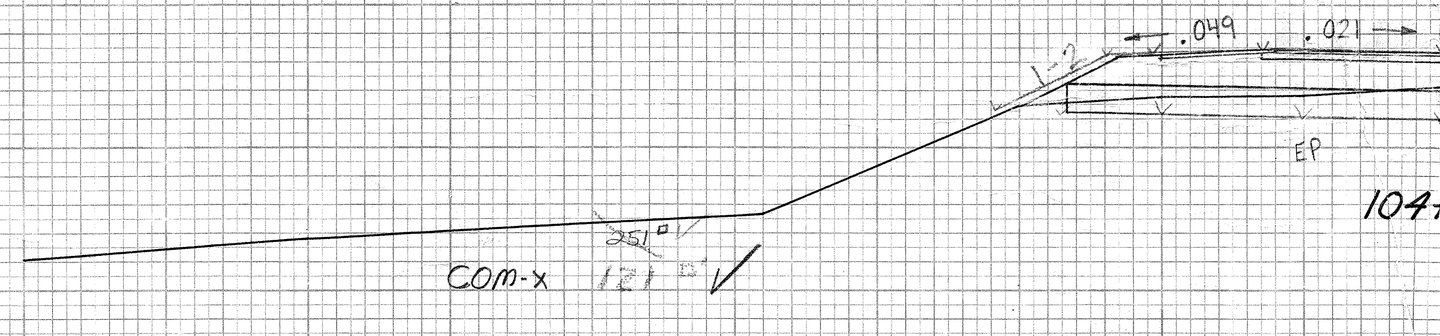

1670

1660

1650

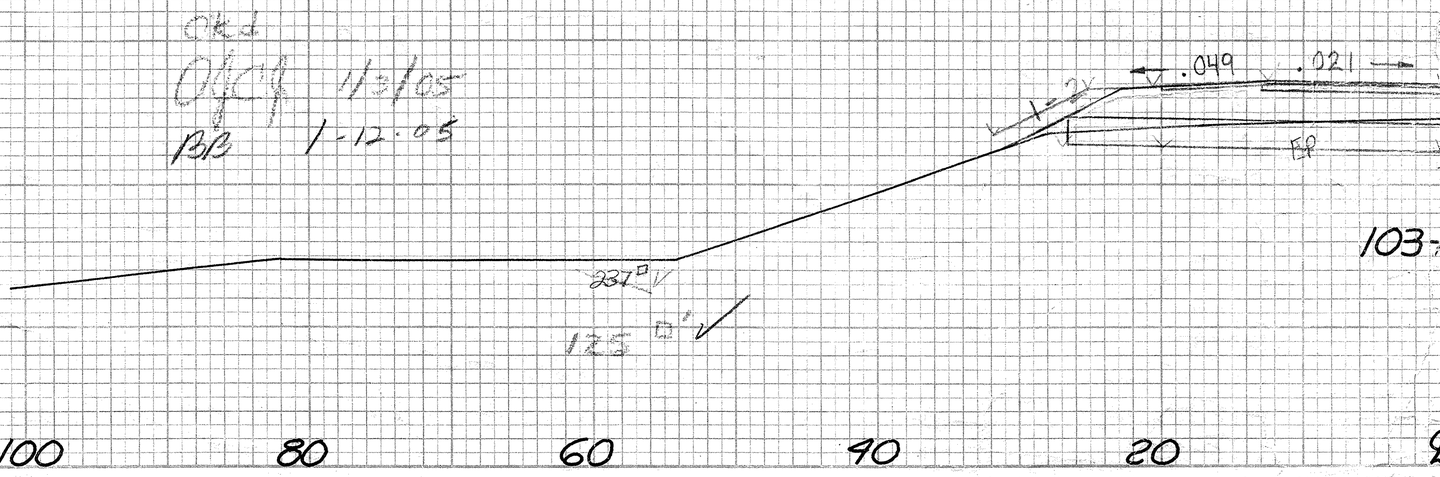

120 100 80 60 40 20

ORIGINAL SURVEY
NOTE BOOK
NO.

	BY	DATE
SURVEYED		
PLOTTED		
TEMPLATE		
AREAS		
AREAS CHECKED		

KEUFFEL & ESSER
A KRATOS Company

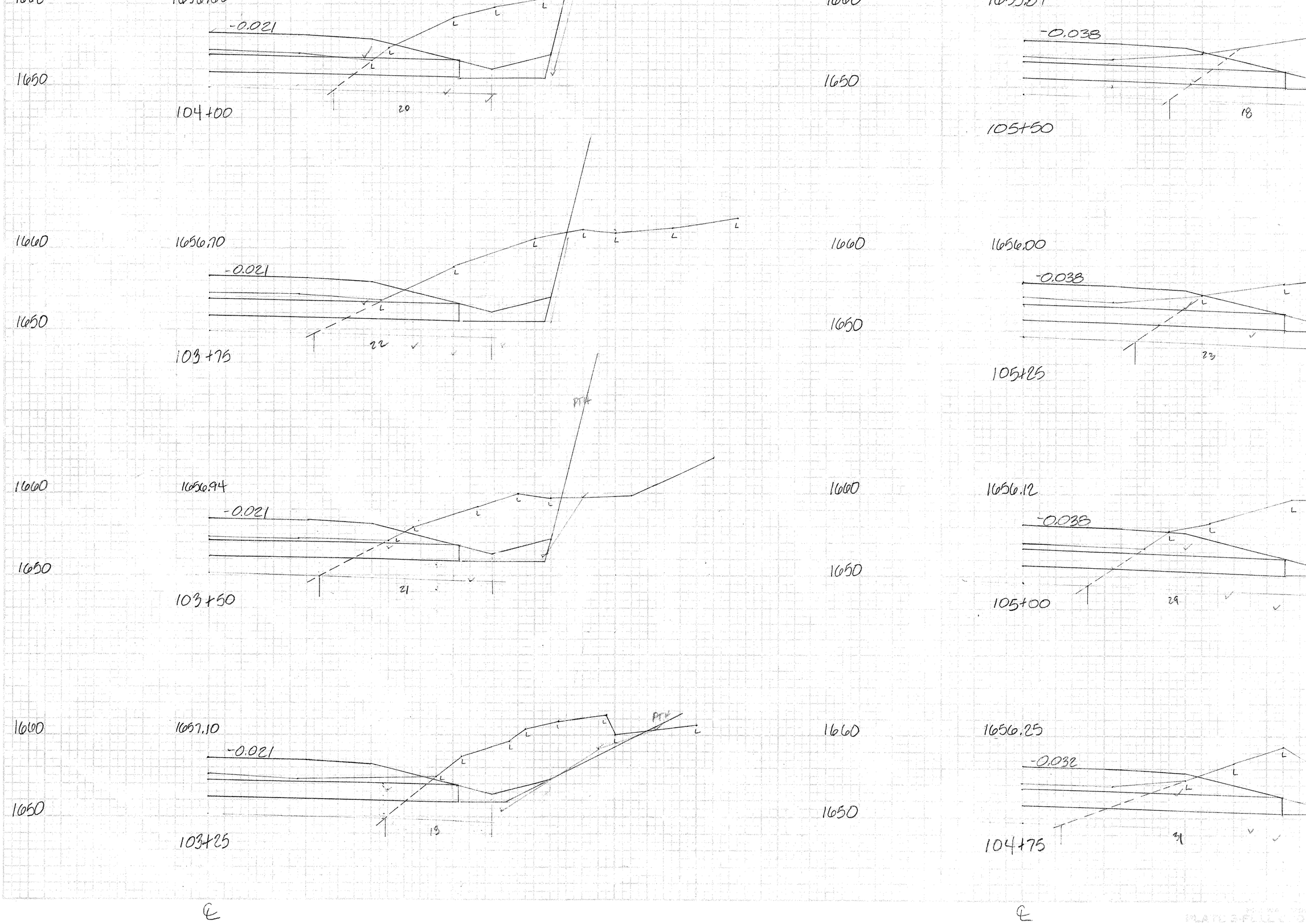

1650
-0.021
104+00
20
1660
1656.70
-0.021
1650
103+75
22
1660
1656.94
-0.021
1650
103+50
21
1660
1657.10
-0.021
1650
103+25
13
1650
-0.038
105+50
18
1660
1656.00
-0.038
1650
105+25
23
1660
1656.12
-0.038
1650
105+00
29
1660
1656.25
-0.032
1650
104+75
31

SEARSBURG – WILMINGTON
NHE 010-1 (18)
STA. 106+00 TO 108+00
SHEET 337 OF 435

120 100 80 60 40 20 ℄ 20 40 60 80 100 120

1660 1650 1640 1670 1660 1650 1670 1660 1650 1670 1660 1650

1654.62
1.3 .032 .038 .038 .063 1.4 1.4 1.2
.021 EP EP
Rip-rap 1.3' WB
Dk. Br Subsoil SI, SA, gravel
1646.86
108+00
395°
E River

107+77 RT. ~ 110+20 RT.
NEW 6" × 243' UNDERDRAIN
W/ FB @ 107+77 RT.

STA 107+75 LT
Remove Existing 15" RCP

1654.87
1.3 1.4 1.2
.021 EP EP
1.4
353 371°
Inv. 1644.2
107+50
Inv. 1645.8
#9
T/G 1650.0
1646.0

STA. 107+75 CL
NEW 30" X 84' PCCSP (.079)
OR CMP (.075) OR RCP CL III OR
CPEP (SL) W/ DITCH CHECK RT AND STONE FILL
TYPE II @ OUTLET AND 4' × 6' D.I. W/
DOUBLE GRATE

1655.12
1.2.5 1.4 1.4 1.2
EP EP
1646.51
107+00
332°

1655.37
1.3 1.4 1.4
EP EP
1646.85
106+50
305°

STA 106+00 RT.
REMOVE EXISTING
CATCH BASIN

BANKING TRANSITION
SCALE
1"=50' Horiz.
1"=0.05' Vert
D=2°00' Rt
BANK=0.038 Ft/Ft.

1655.62
1.2.5 .032 .038 .038 .063 1.4 1.4 1.2
EP EP
1647.19
106+00
363°
Pk 1-12-05

1021+45 +0.021 LT. EDGE
1041+27 -0.021 PC +0.025
1041+45 +0.038 LT. EDGE
℄
RT EDGE -0.021
LT SHLDR -0.049
RT SHLDR -0.063
-0.021
LT SHLDR -0.032
RT. EDGE
RT. SHLDR

120 100 80 60 40 20 ℄ 20 40 60 80 100 120

FINAL SURVEY — SURVEYED, PLOTTED, NOTE BOOK, TEMP. ATE., AREAS, AREAS CHECKED, NO., BY, DATE

ORIGINAL SURVEY — SURVEYED, PLOTTED, NOTE BOOK, STATIONS, AREAS, AREAS CHECKED, NO., BY, DATE

SEARSBURG – WILMINGTON
NHF 010-1 (18)
STA. 108+50 To 110+50
SHEET 337 OF 435

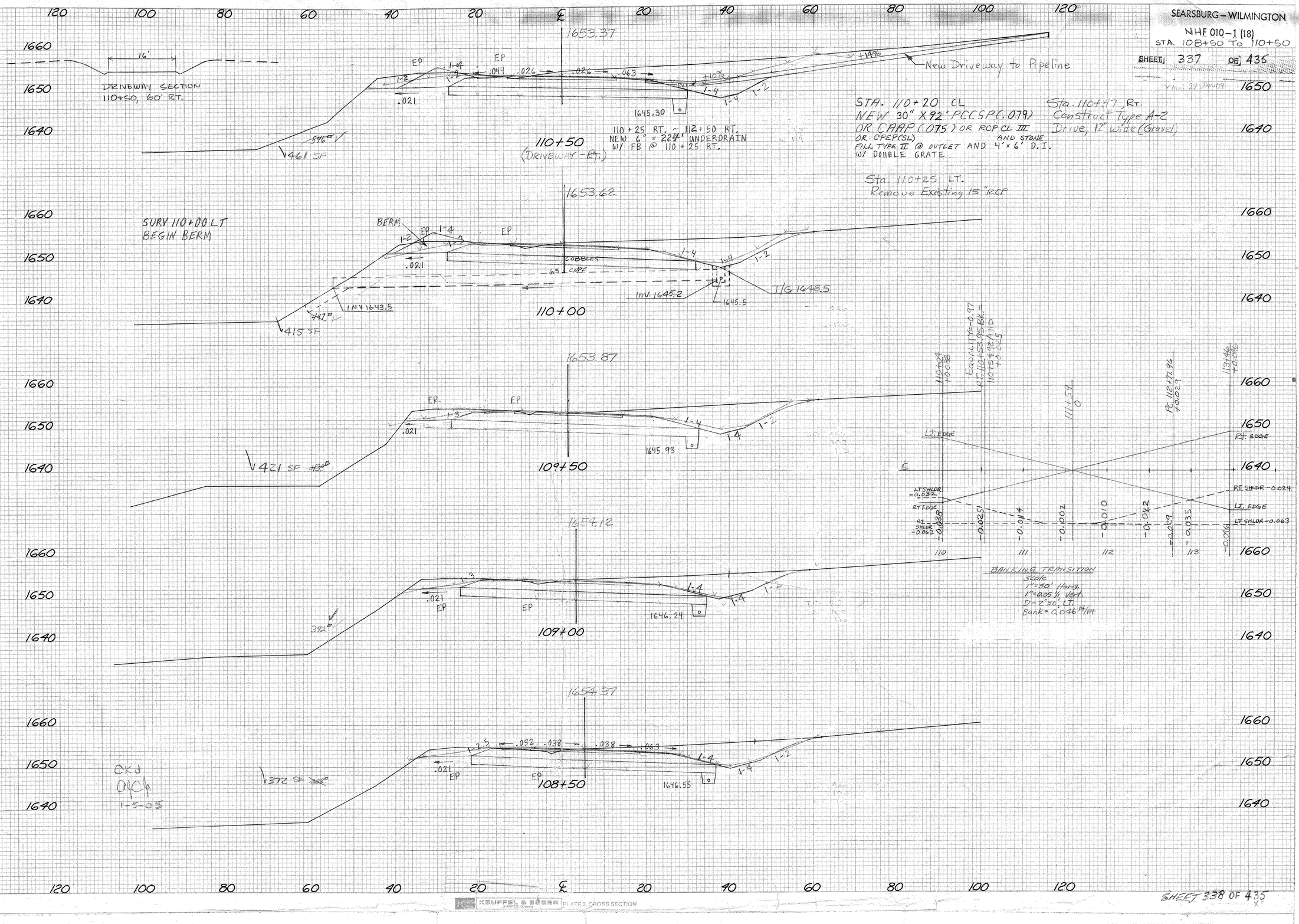

FINAL SURVEY
NOTE BOOK
NO.
SURVEYED
PLOTTED
CHECKED
AREAS
AREAS CHECKED
DATE
BY

ORIGINAL SURVEY
NOTE BOOK
NO.
SURVEYED
PLOTTED
CHECKED
AREAS
AREAS CHECKED
DATE
BY

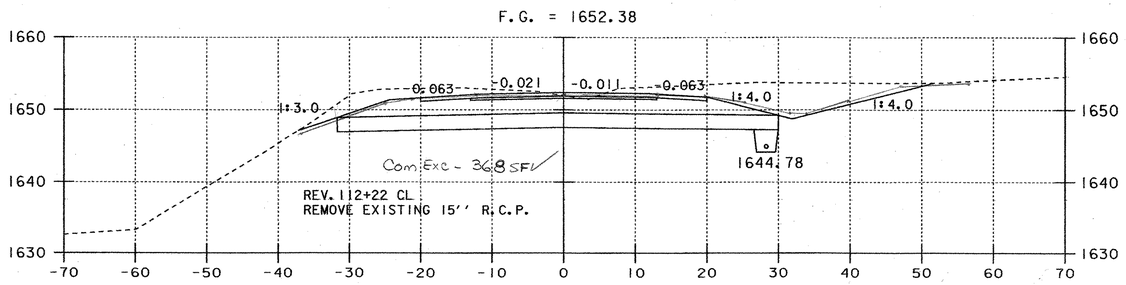

112+00

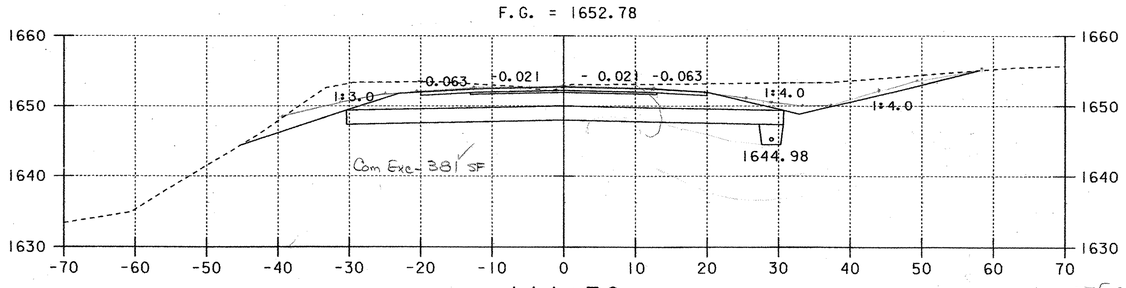

111+50

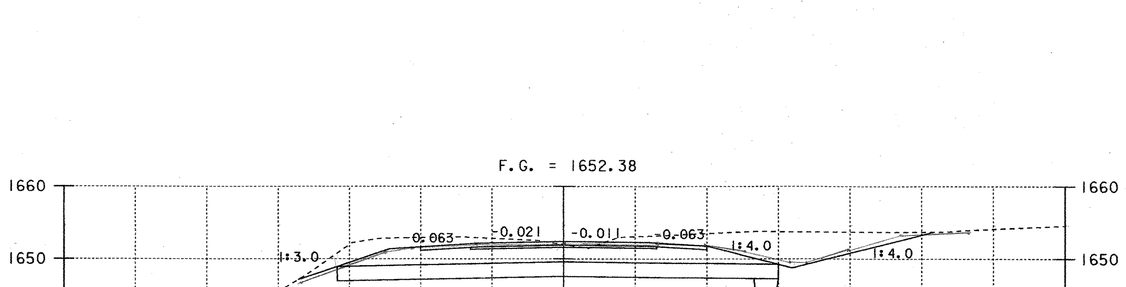

111+00

REV. PT 110+53.95 BK. =
110+54.92 ADH.
EQ. = -0.97'

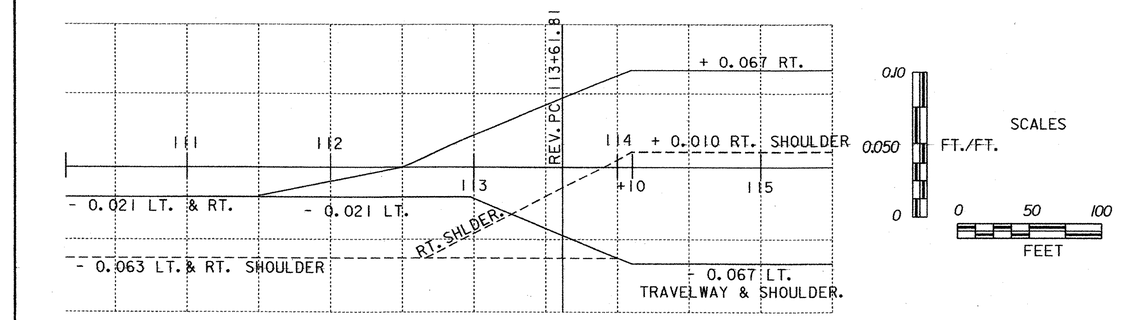

BANKING TRANSITION DIAGRAM

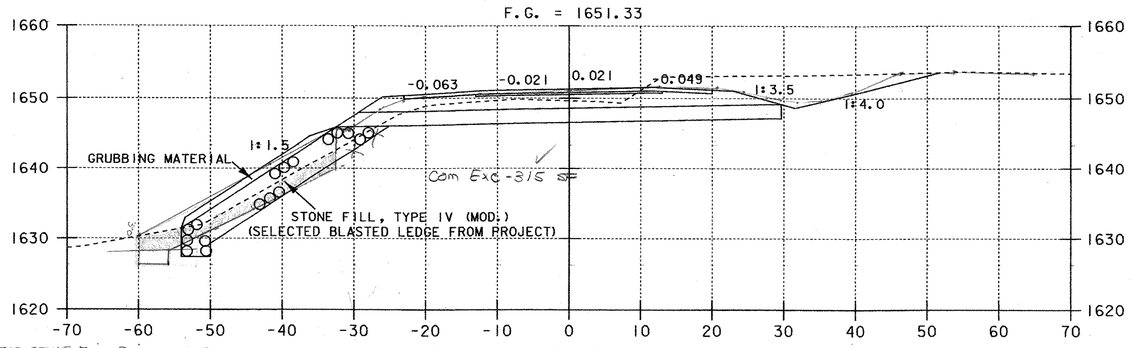

113+00

—EXC. FOR STONE FILL PAID AS 203.15 COM. EXC. —
11340 ~ 11540
KEYWAY EXC. PAID AS 203.27 ~ UNCL. CHAN. EXC.
SEE WRITTEN ORDER # 60

STONE TYPE IV MOD = 139 ✓
BB 3-10-05

GEOTEXTILE UNDER S.F. = 10 LF ✓
DC 3-17-05
BB 4-7-05

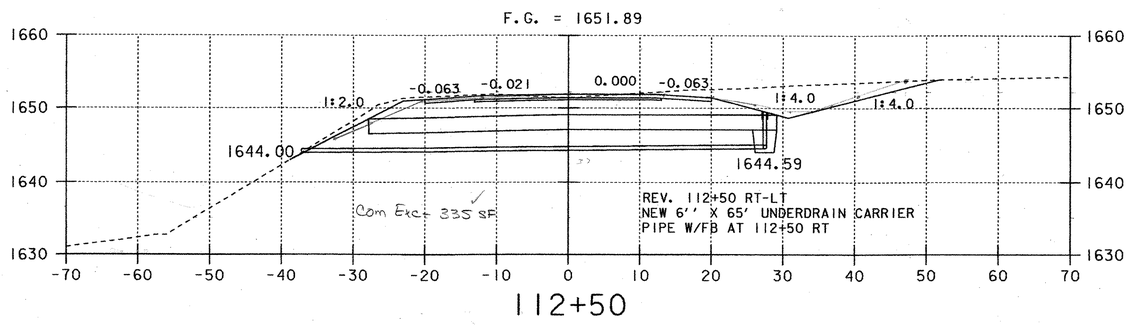

112+50

0 10 20
SCALE IN FEET

PROJECT NAME:	SEARSBURG - WILMINGTON
PROJECT NUMBER:	NHF 010-1(18)
PLOT FILE NAME: DD096X01	PLOT DATE: 18-JAN-2002
PROJECT LEADER: DELLA SANTA	DRAWN BY: SQUAD B
DESIGN FILE NAME: 78D096/DESIGN/DD096CWRK.DGN:	
	SHEET 339 OF 435

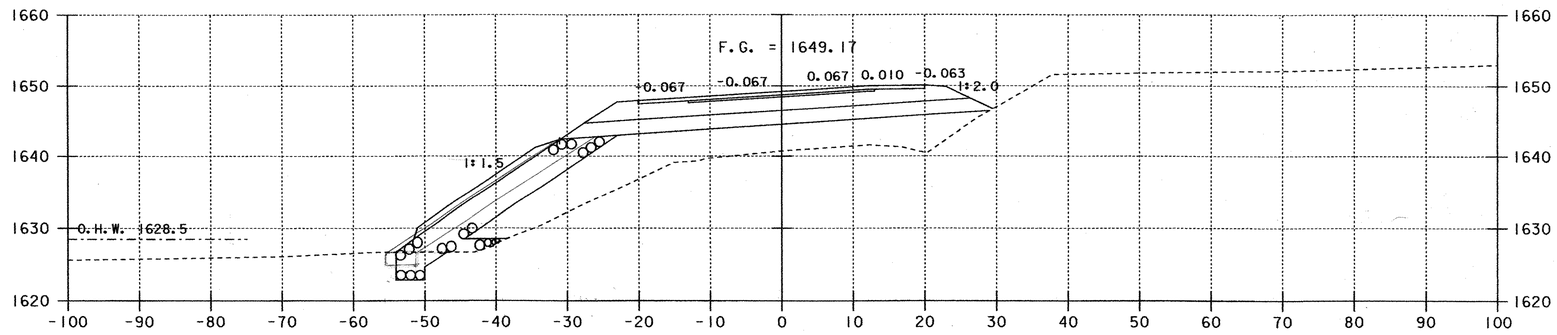

114+50

STONE TYPE III MOD = 70 ✓

GEO UNDER S.F = 8 LF ✓ KB 4-7-05

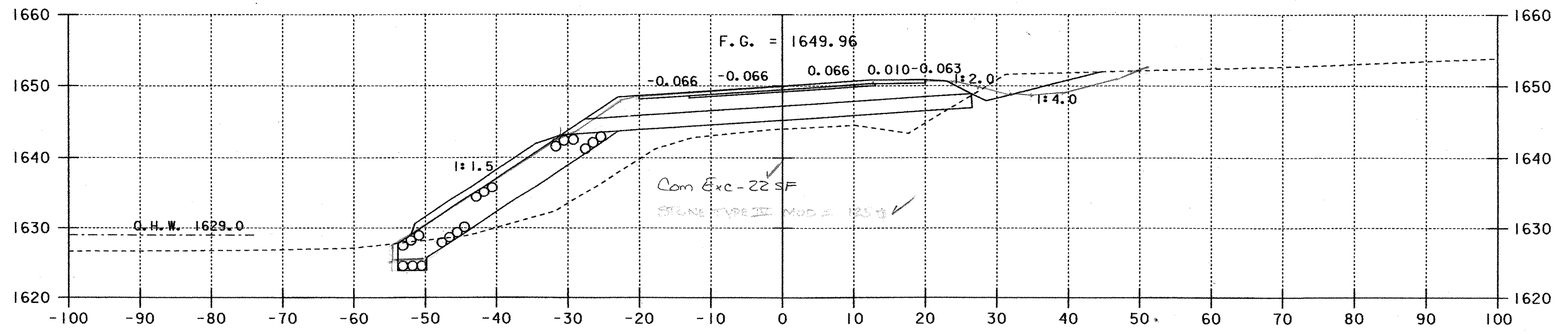

114+00

GEO UNDER S.F = 7 LF ✓ KB 4-7-05

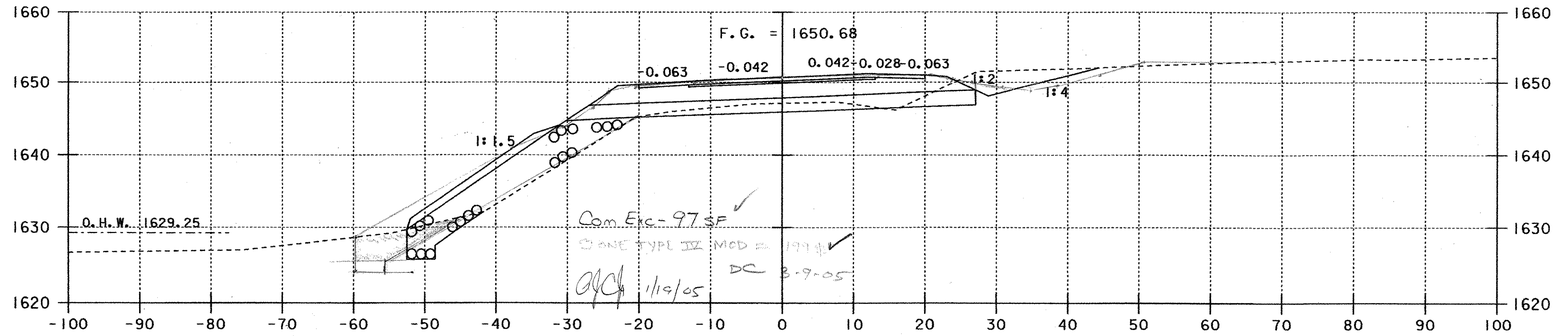

113+50

GEO UNDER S.F = 11 LF ✓

DC 1-21-05
BR 3-10-05

DC 3-17-05
KB 4-7-05

0 10 20
SCALE IN FEET

PROJECT NAME:	SEARSBURG - WILMINGTON
PROJECT NUMBER:	NHF 010-1(18)
PLOT FILE NAME: DD096X02	PLOT DATE: 11-JUL-2001
PROJECT LEADER: DELLA SANTA	DRAWN BY: SQUAD B
DESIGN FILE NAME: 78D096/DESIGN/DD096CWRK.DGN:	
	SHEET 340 OF 435

REV. 116+23.79
END BRIDGE 24 RESUME ROADWAY

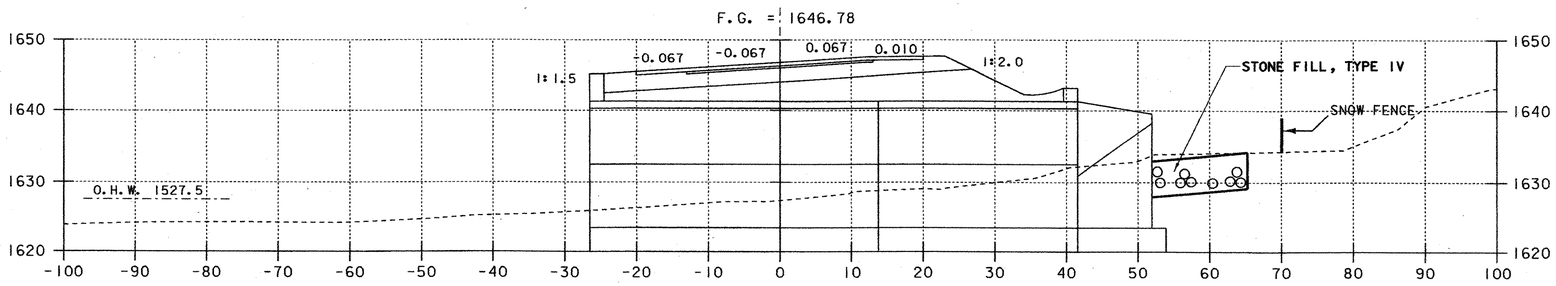

116+00

REV. 115+86.91
STOP ROADWAY BEGIN BRIDGE 24

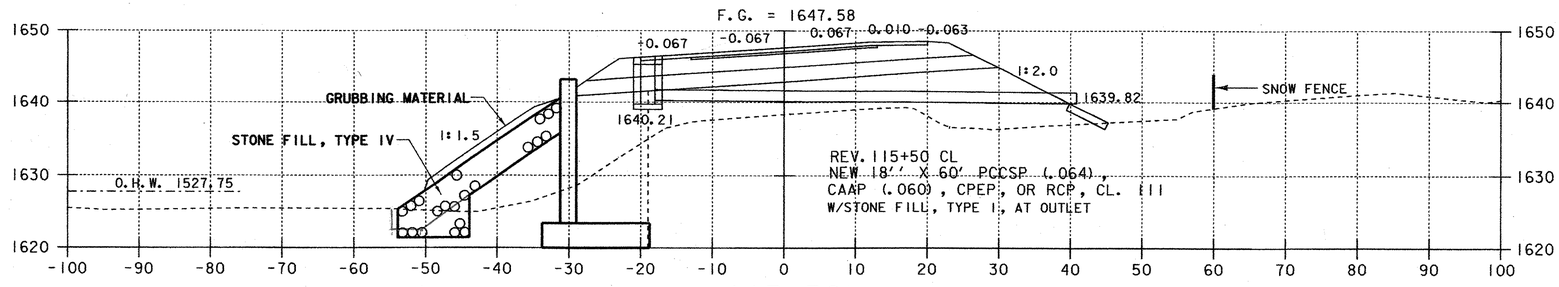

115+50

BUTT GEO UNDER S.F= 7 CF MATCH STA 115+47

BUTT TYPE III MOD 115+47 · SAME AS 115+00 = 145 #

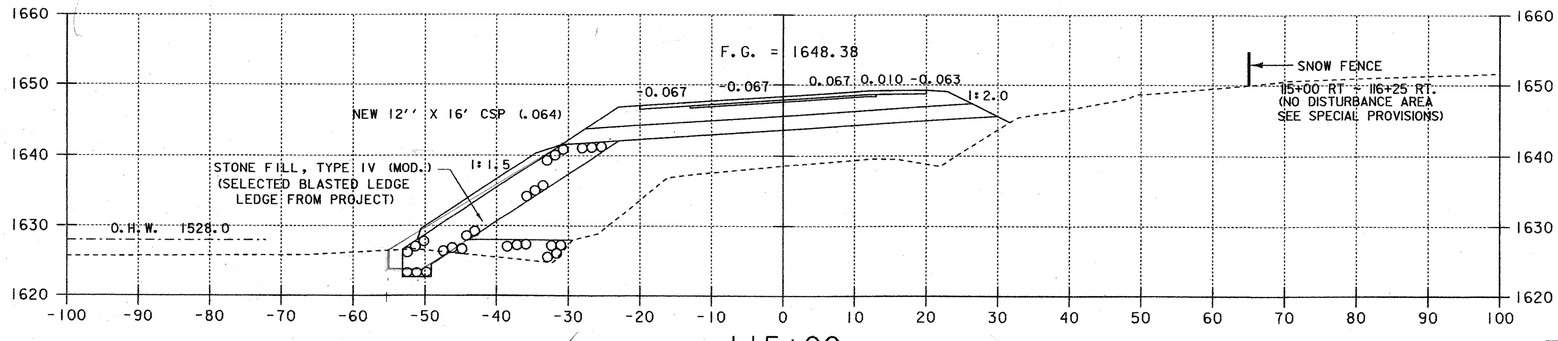

115+00

Com Exc- 0 SF ✓

STONE TYPE III MOD = 145 # ✓ GEO UNDER S.F = 8 CF ✓

BB - 2-7-05 ✓ DC DC 3-17-05

0 10 20
SCALE IN FEET

PROJECT NAME:	SEARSBURG - WILMINGTON
PROJECT NUMBER:	NHF 010-1(18)
PLOT FILE NAME: DD096X03	PLOT DATE: 28-FEB-2002
PROJECT LEADER: DELLA SANTA	DRAWN BY: SQUAD B
DESIGN FILE NAME: 78D096/DESIGN/DD096CWRK.DGN:	
	SHEET 341 OF 435

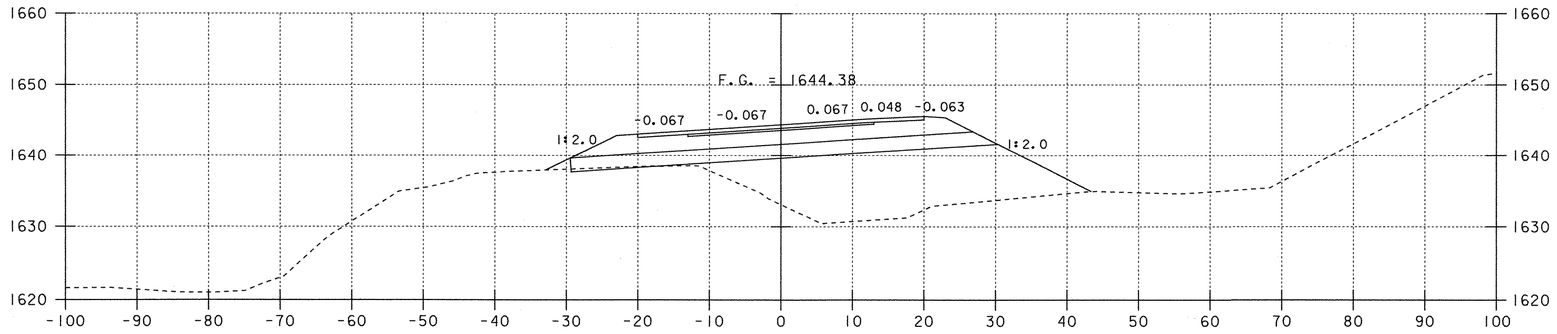

117+50

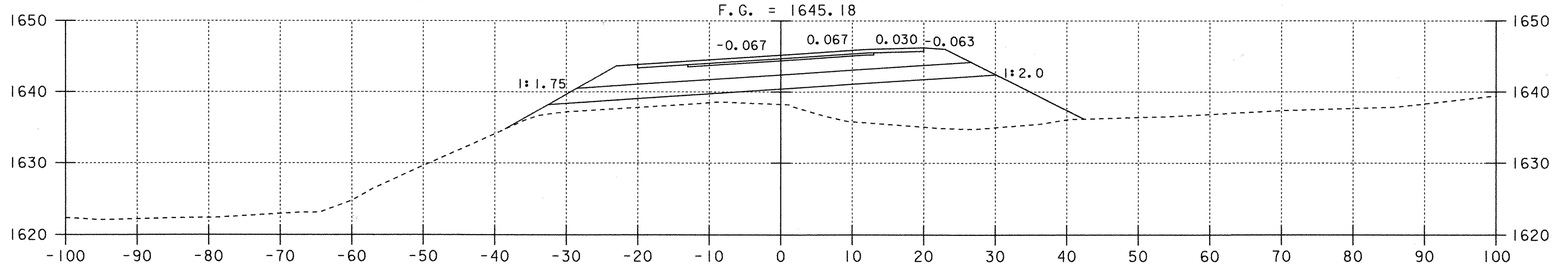

117+00 END STONE FILL TYPE IV MOD SAME AS 116+50 = 132 Φ

END GEO UNDER S.F = 10 LF SAME AS 116+50

BUTT TYPE II MOD 116+52 USE STA 116+50 SECTION = 132 Φ

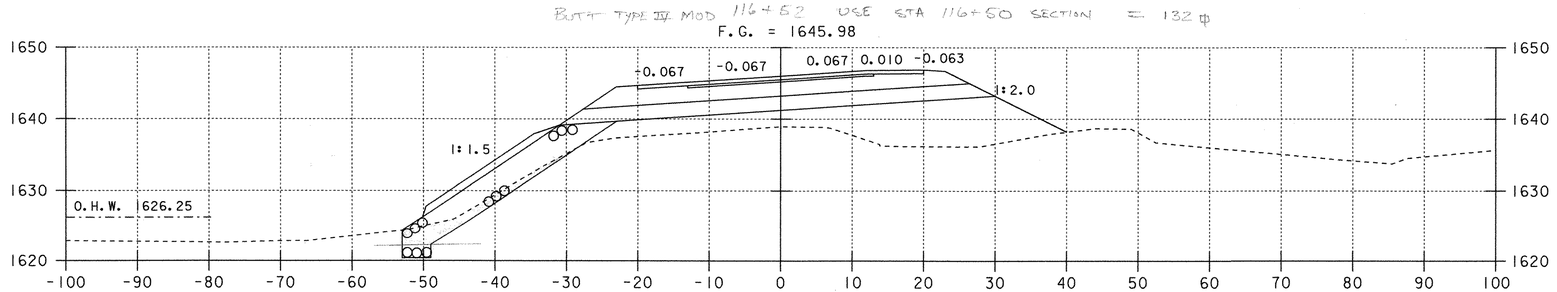

116+50

KEY WAY EXC PAID AS 203.27-UNCL CHAN EXC.
SEE WRITTEN ORDER # 60
STA 116+50 ~ 117+0

COM EXC - 29 SF ✓

1/27/05

BUTT GEO UNDER S.F = 10 LF ✓ MATCH STA 116+50
BB 4-7-05
DC 3-16-05

0 10 20
SCALE IN FEET

PROJECT NAME:	SEARSBURG - WILMINGTON
PROJECT NUMBER:	NHF 010-1(18)
PLOT FILE NAME: DD096X04	PLOT DATE: 27-NOV-20
PROJECT LEADER: DELLA SANTA	DRAWN BY: SQUAD B
DESIGN FILE NAME: 78D096/DESIGN/DD096CWRK.DGN:	
	SHEET 342 OF 43

REV. 118+61.38
STOP ROADWAY BEGIN BRIDGE 25

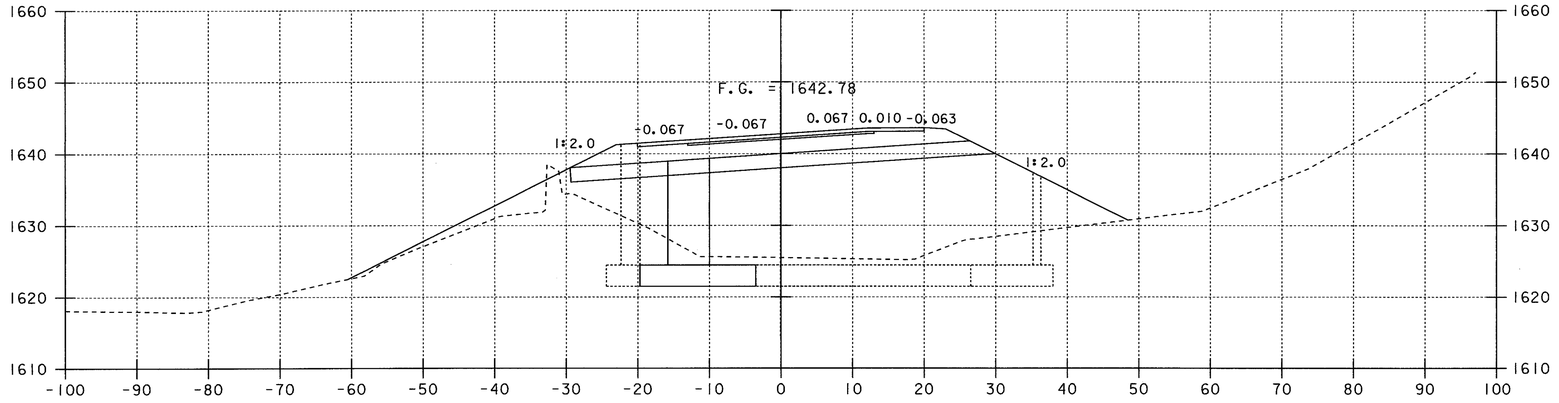

118+50

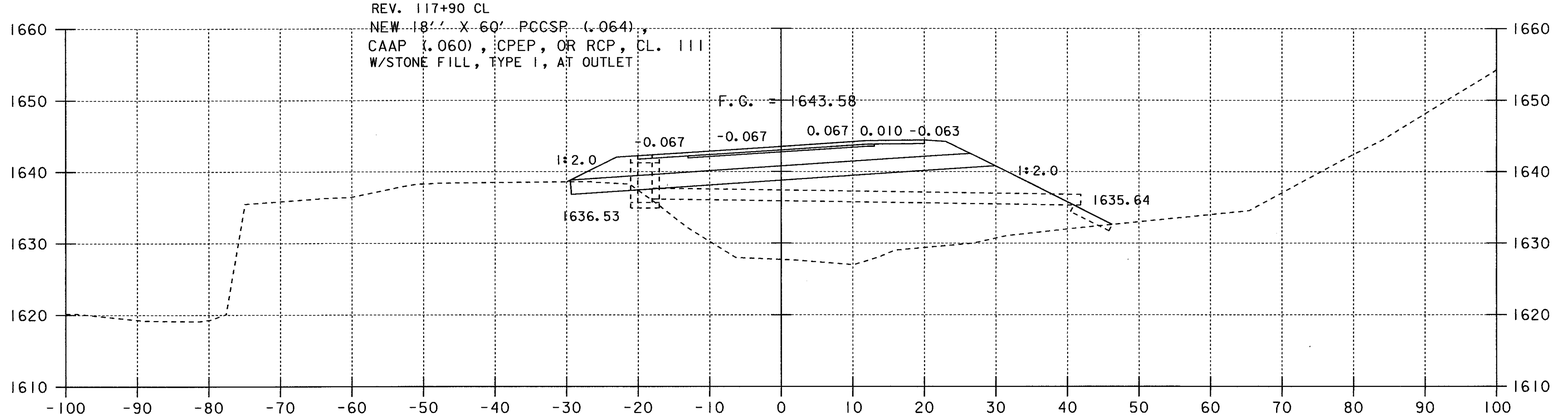

118+00

NOTE:
DASHED LINE INDICATES SUBSTRUCTURE UPSTATION AND/OR DOWNSTATION OF SECTION CUT LINE.

117+75 LT - 118+25 LT
GRUBBING MATERIAL

0 10 20
SCALE IN FEET

PROJECT NAME:	SEARSBURG - WILMINGTON
PROJECT NUMBER:	NHF 010-1(18)
PLOT FILE NAME: DD096X05	PLOT DATE: 28-FEB-2002
PROJECT LEADER: DELLA SANTA	DRAWN BY: SQUAD B
DESIGN FILE NAME: 78D096/DESIGN/DD096CWRK.DGN:	
	SHEET 343 OF 435

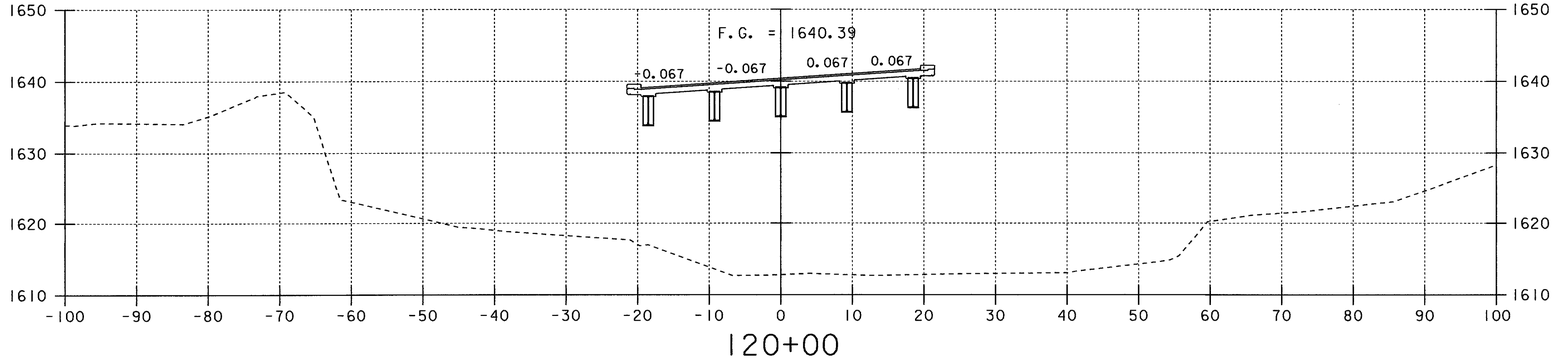

120+00

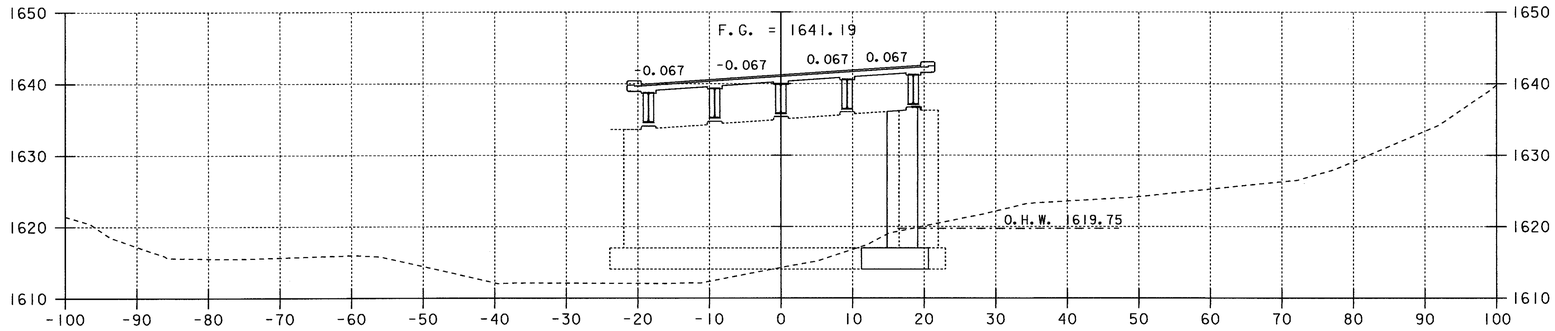

119+50

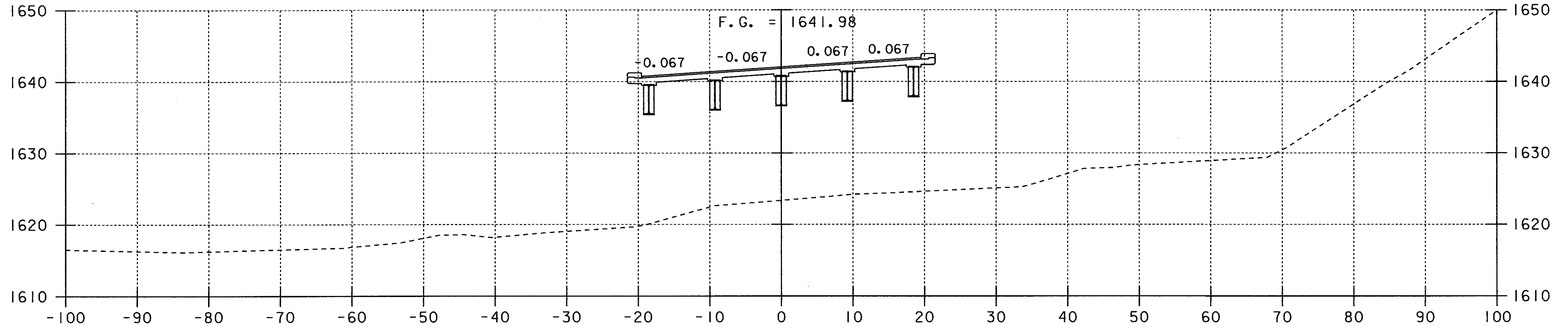

119+00

NOTE:
DASHED LINE INDICATES SUBSTRUCTURE UPSTATION AND/OR DOWNSTATION OF SECTION CUT LINE.

0 10 20
SCALE IN FEET

PROJECT NAME: SEARSBURG - WILMINGTON
PROJECT NUMBER: NHF 010-1(18)

PLOT FILE NAME: DD096X06
PLOT DATE: 28-FEB-2002
PROJECT LEADER: DELLA SANTA
DRAWN BY: SQUAD B
DESIGN FILE NAME: 78D096/DESIGN/DD096CWRK.DGN:

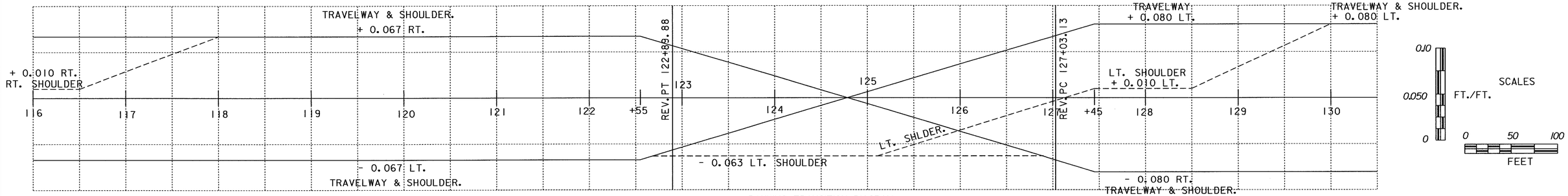

BANKING TRANSITION DIAGRAM

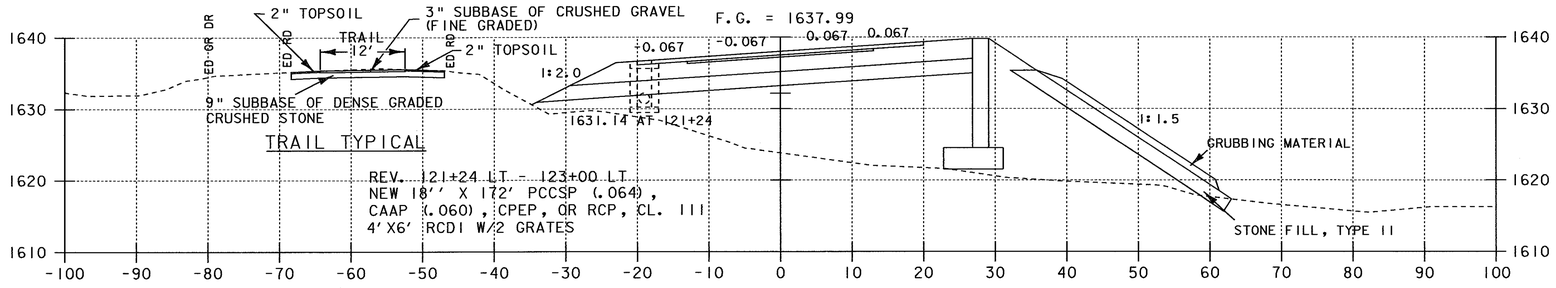

TRAIL TYPICAL

121+50

REV. 121+08.47

END BRIDGE 25 RESUME ROADWAY

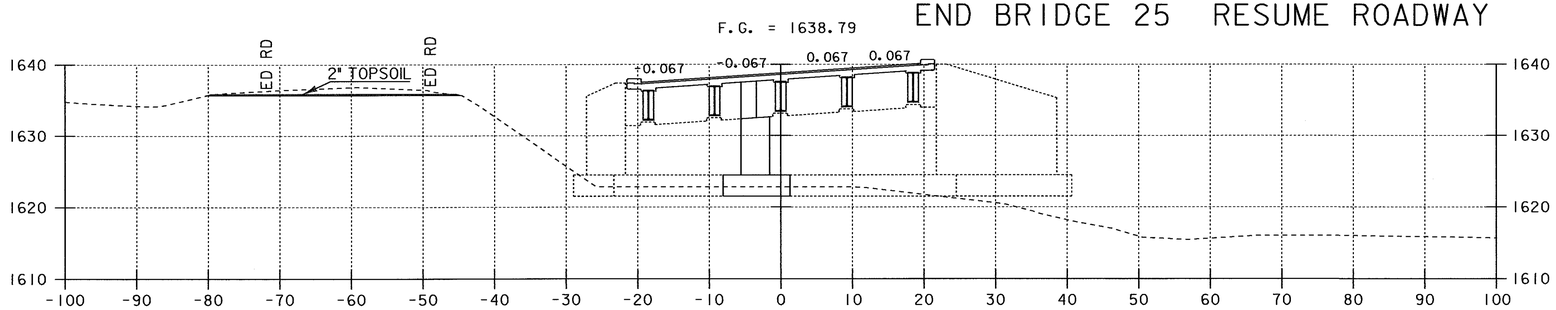

121+00

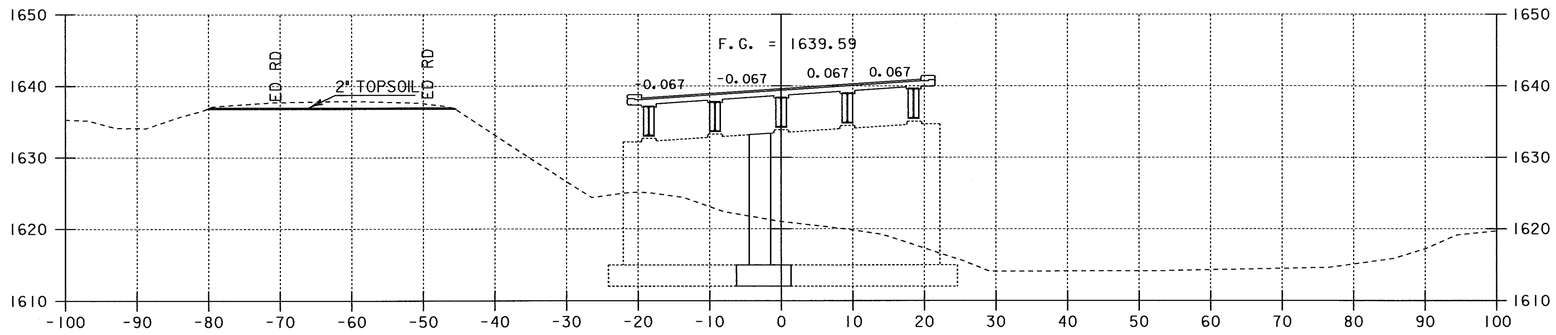

120+50

NOTE:
DASHED LINE INDICATES SUBSTRUCTURE UPSTATION AND/OR DOWNSTATION OF SECTION CUT LINE.

0 10 20
SCALE IN FEET

PROJECT NAME: SEARSBURG - WILMINGTON
PROJECT NUMBER: NHF 010-1(18)

PLOT FILE NAME: DD096X07 PLOT DATE: 28-FEB-2002
PROJECT LEADER: DELLA SANTA DRAWN BY: SQUAD B
DESIGN FILE NAME: 78D096/DESIGN/DD096CWRK.DGN:

REV. 123+00 CL
NEW 18'' X 56' PCCSP (.064),
CAAP (.060), CPEP, OR RCP,
CL. III, WITH STONE FILL,
TYPE I, @ OUTLET

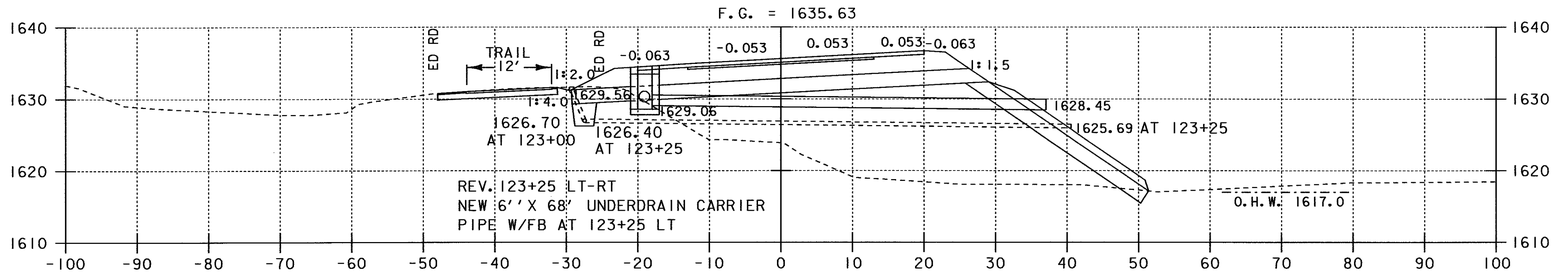

123+00

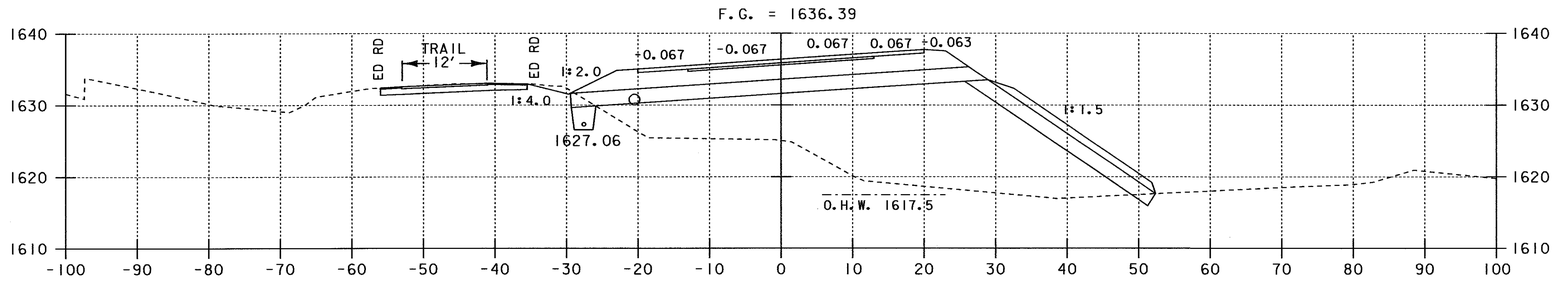

122+50

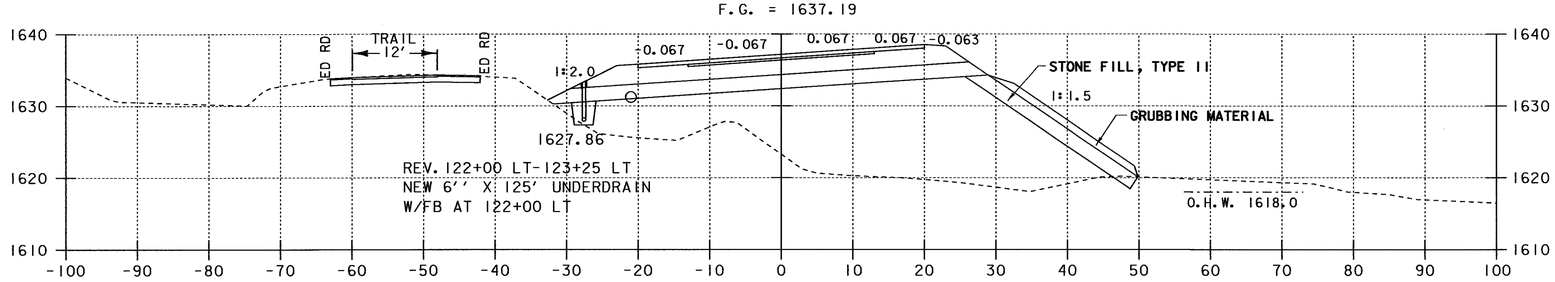

122+00

0 10 20
SCALE IN FEET

PROJECT NAME:	SEARSBURG - WILMINGTON
PROJECT NUMBER:	NHF 010-1(18)
PLOT FILE NAME: DD096X08	PLOT DATE: 01-FEB-2002
PROJECT LEADER: DELLA SANTA	DRAWN BY: SQUAD B
DESIGN FILE NAME: 78D096/DESIGN/DD096CWRK.DGN:	
	SHEET 346 OF 435

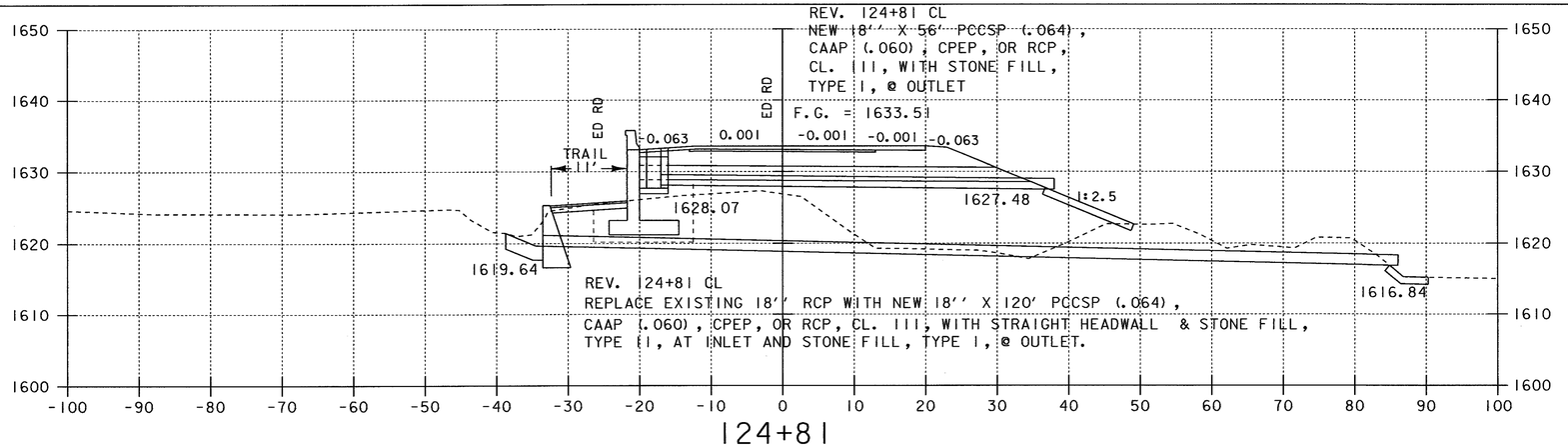

124+81

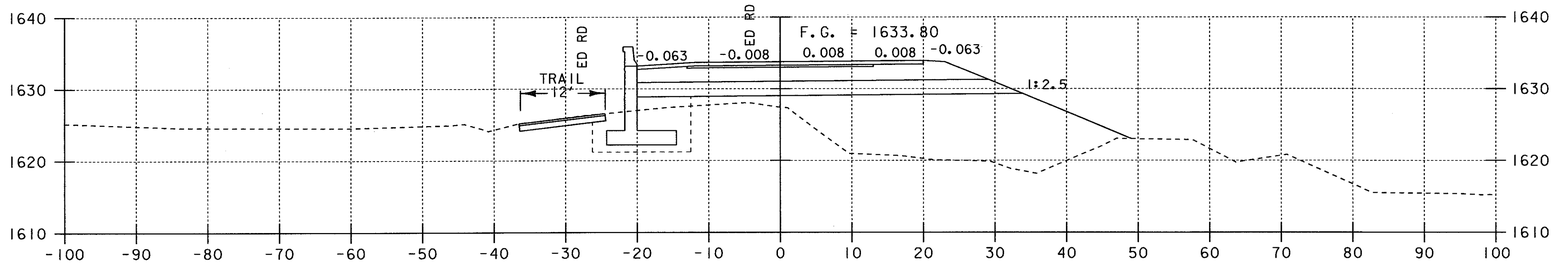

124+50

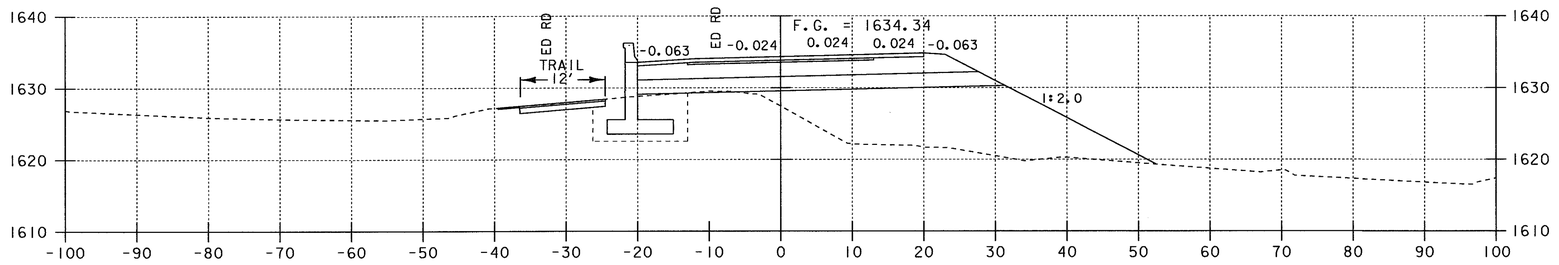

124+00

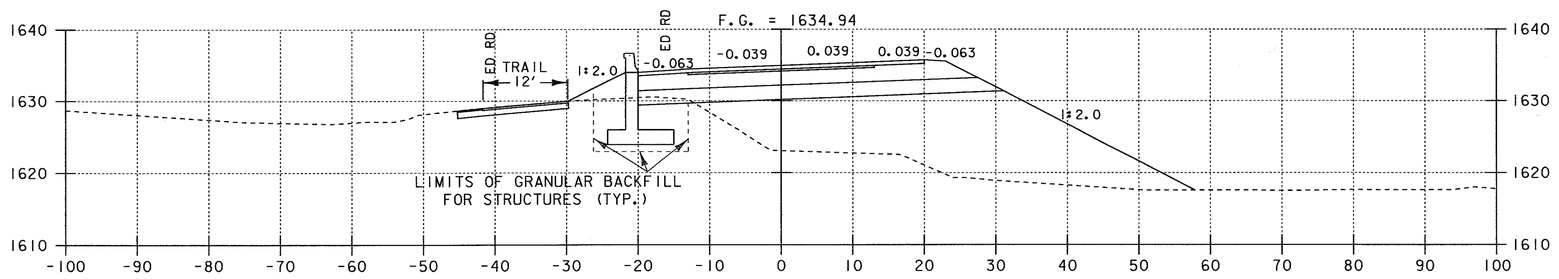

123+50

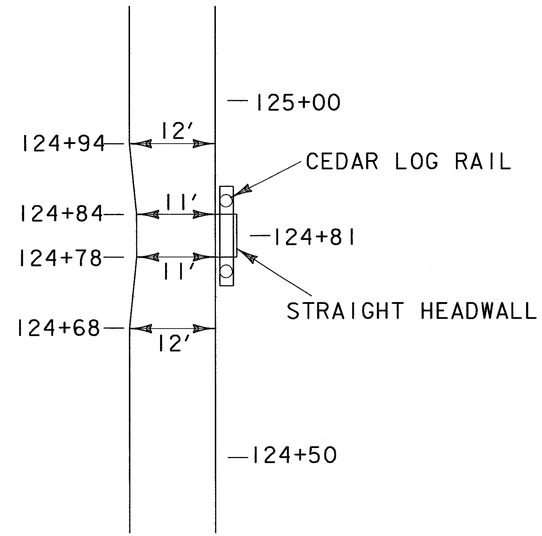

TRAIL WIDTH TRANSITION
NOT TO SCALE

0 10 20
SCALE IN FEET

PROJECT NAME:	SEARSBURG - WILMINGTON
PROJECT NUMBER:	NHF 010-1(18)
PLOT FILE NAME: DD096X09	PLOT DATE: 13-FEB-2002
PROJECT LEADER: DELLA SANTA	DRAWN BY: SQUAD B
DESIGN FILE NAME: 78D096/DESIGN/DD096CWRK.DGN:	
	SHEET 347 OF 435

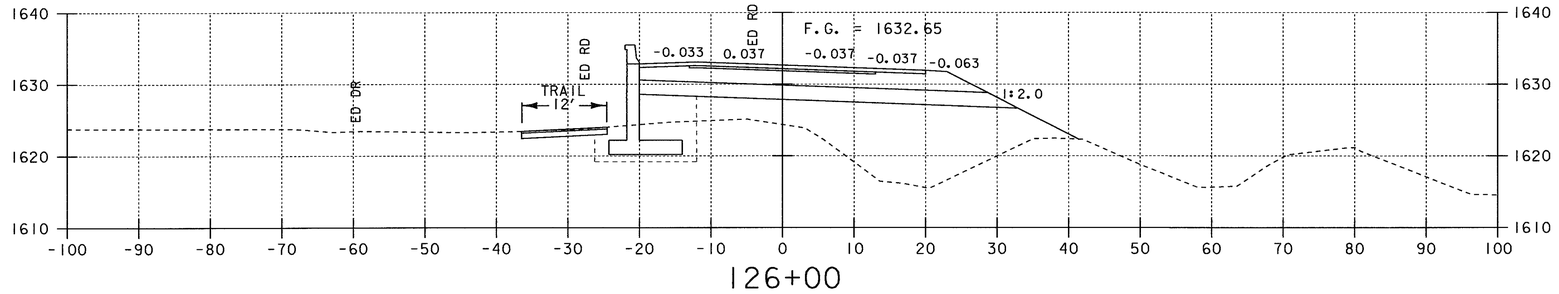

126+00

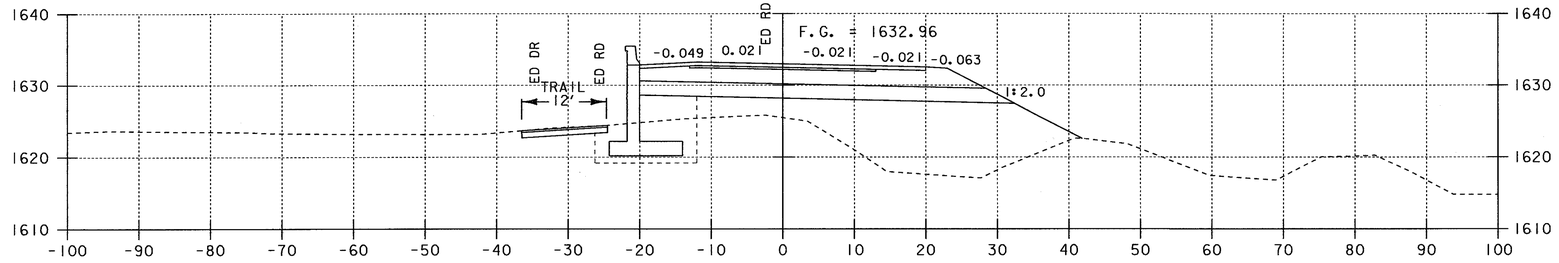

125+50

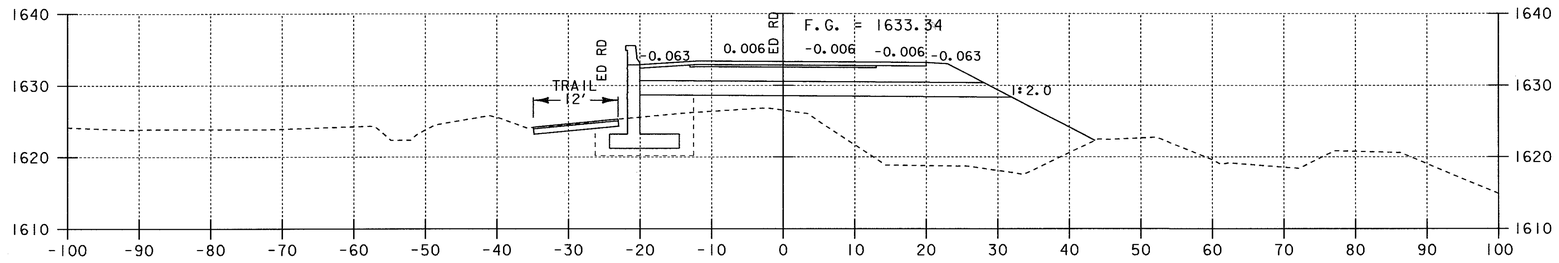

125+00

0 10 20
SCALE IN FEET

PROJECT NAME:	SEARSBURG - WILMINGTON
PROJECT NUMBER:	NHF 010-1(18)
PLOT FILE NAME: DD096X10	PLOT DATE: 13-FEB-2002
PROJECT LEADER: DELLA SANTA	DRAWN BY: SQUAD B
DESIGN FILE NAME: 78D096/DESIGN/DD096CWRK.DGN:	
	SHEET 348 OF 435

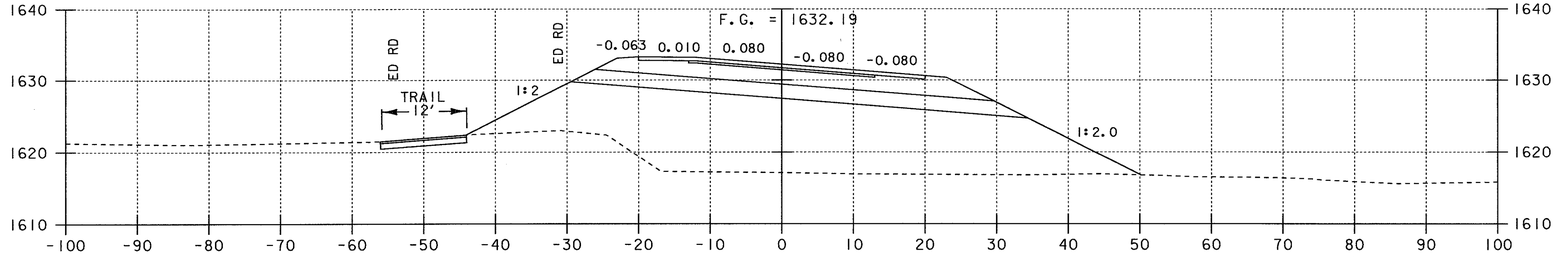

127+50

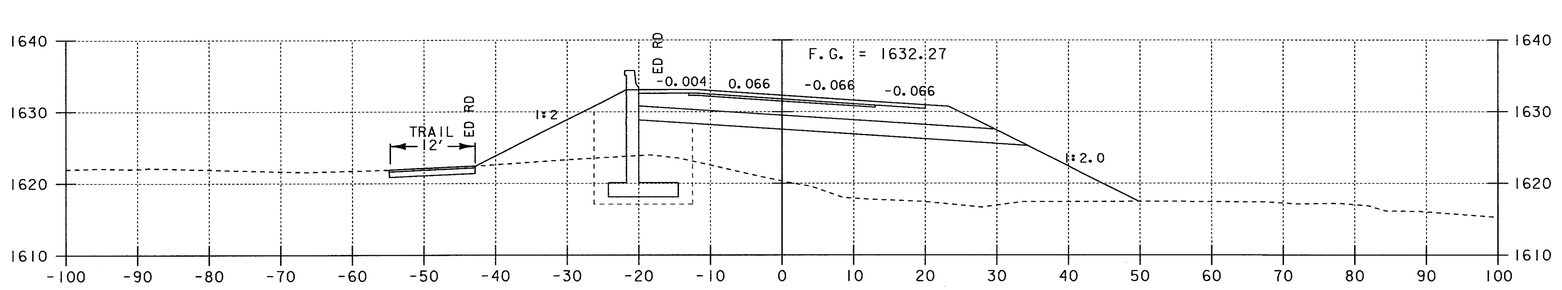

127+00

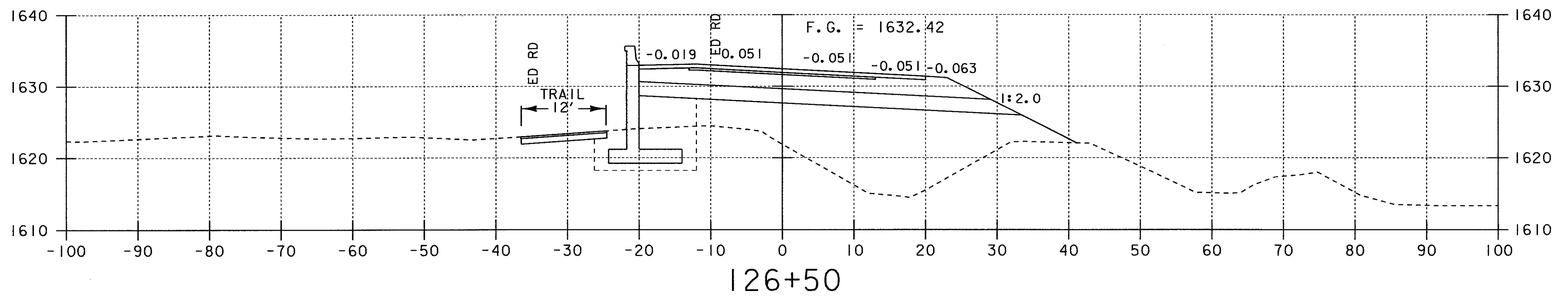

126+50

0 10 20
SCALE IN FEET

PROJECT NAME:	SEARSBURG - WILMINGTON
PROJECT NUMBER:	NHF 010-1(18)
PLOT FILE NAME: DD096XII	PLOT DATE: 15-FEB-2002
PROJECT LEADER: DELLA SANTA	DRAWN BY: SQUAD B
DESIGN FILE NAME: 78D096/DESIGN/DD096CWRK.DGN:	
	SHEET 349 OF 435

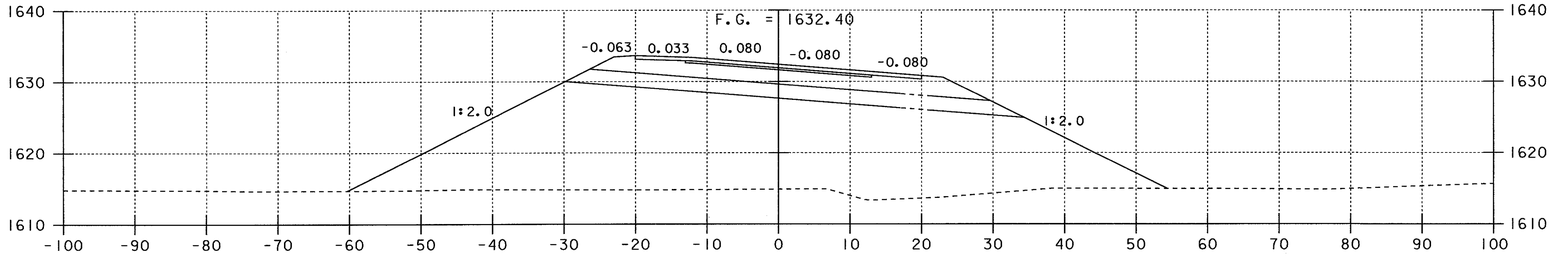

129+00

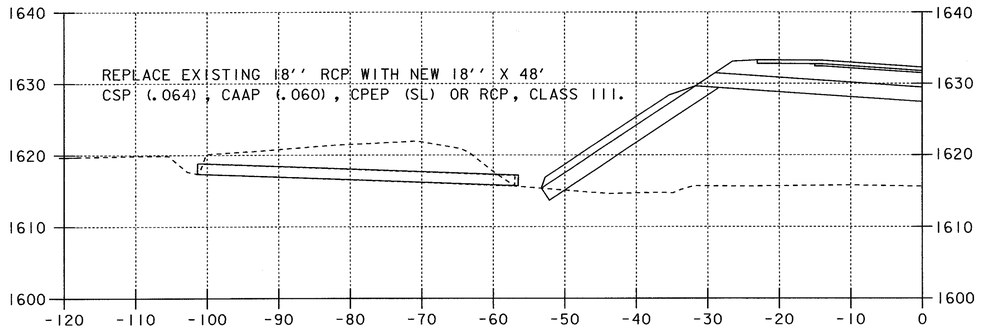

128+52 , 56' LT AND SKEWED 120°-12'-06'' LT

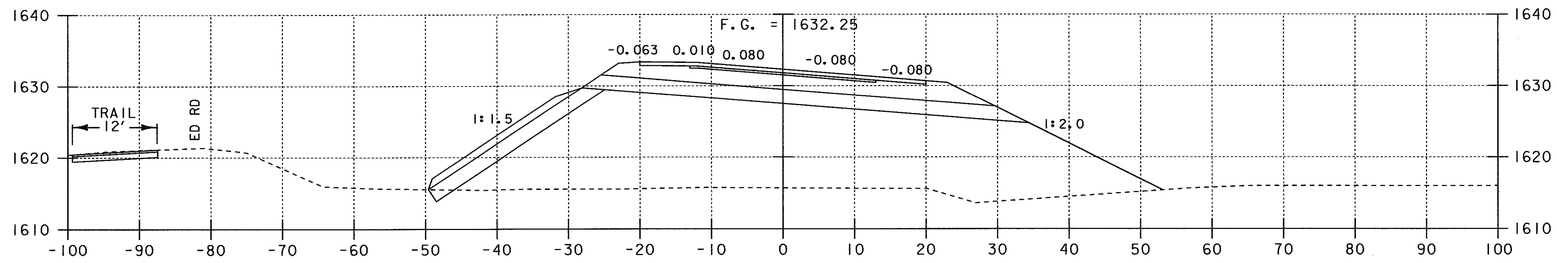

128+50

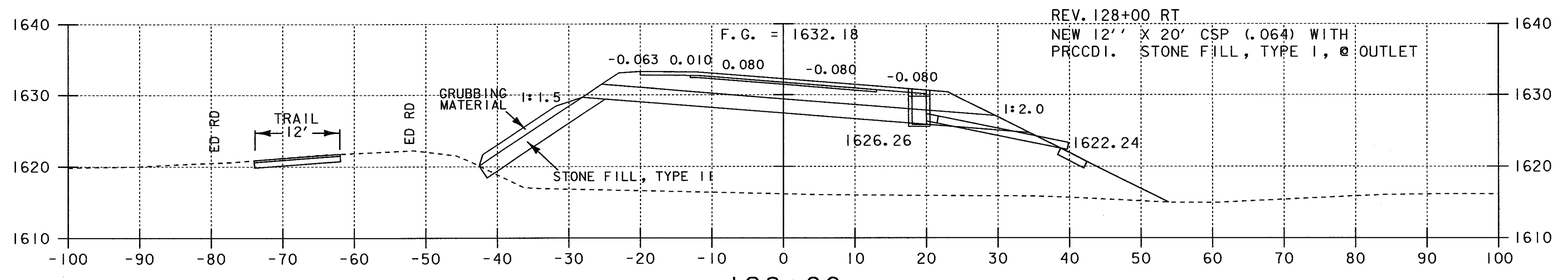

128+00

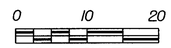

SCALE IN FEET

PROJECT NAME:	SEARSBURG - WILMINGTON
PROJECT NUMBER:	NHF 010-1(18)
PLOT FILE NAME: DD096X12	PLOT DATE: 13-FEB-2002
PROJECT LEADER: DELLA SANTA	DRAWN BY: SQUAD B
DESIGN FILE NAME: 78D096/DESIGN/DD096CWRK.DGN:	
	SHEET 350 OF 435

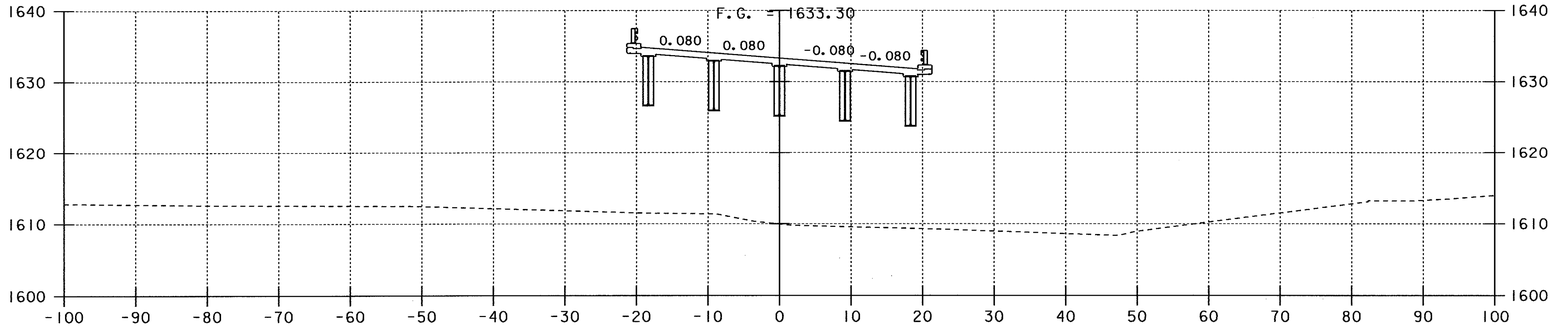

130+50

REV. 130+17.40

STOP ROADWAY BEGIN BRIDGE 25A

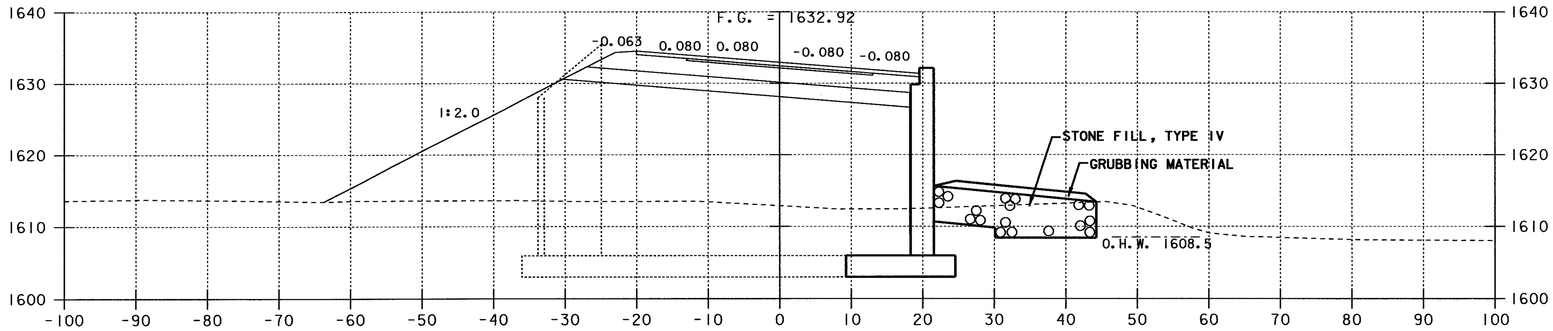

130+00

REV. 129+65 RT.
NEW 18'' X 20' PCCSP (.064),
CAAP (.060), CPEP, OR RCP,
CL. III, WITH STONE FILL,
TYPE I, @ OUTLET
4'X6' RCDI W/2 GRATES
AT REV. STA. 129+65 RT.

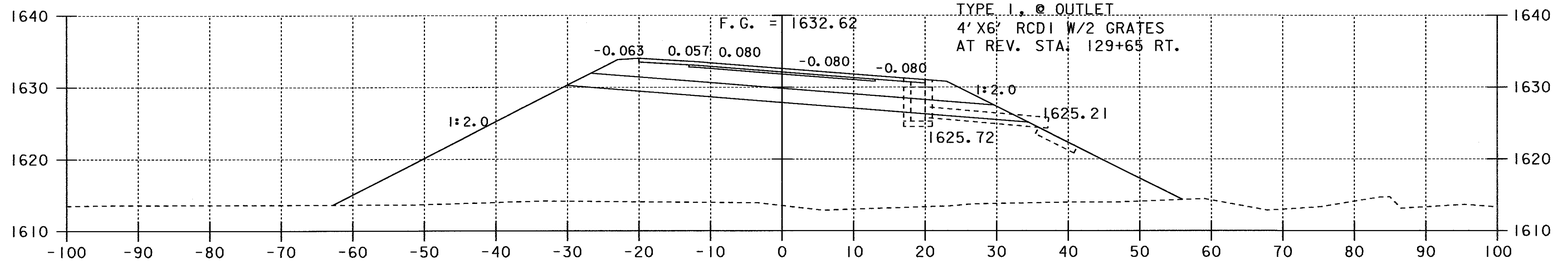

129+50

NOTE:
DASHED LINE INDICATES SUBSTRUCTURE UPSTATION AND/OR DOWNSTATION OF SECTION CUT LINE.

0 10 20
SCALE IN FEET

PROJECT NAME: SEARSBURG - WILMINGTON
PROJECT NUMBER: NHF 010-1(18)

PLOT FILE NAME: DD096X13
PLOT DATE: 18-JAN-2002
PROJECT LEADER: DELLA SANTA
DRAWN BY: SQUAD B
DESIGN FILE NAME: 78D096/DESIGN/DD096CWRK.DGN:

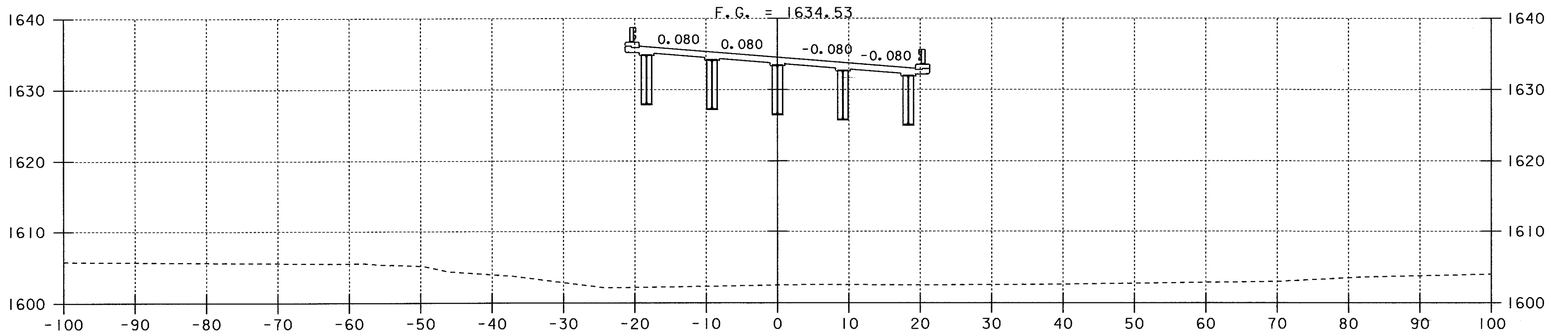

132+00

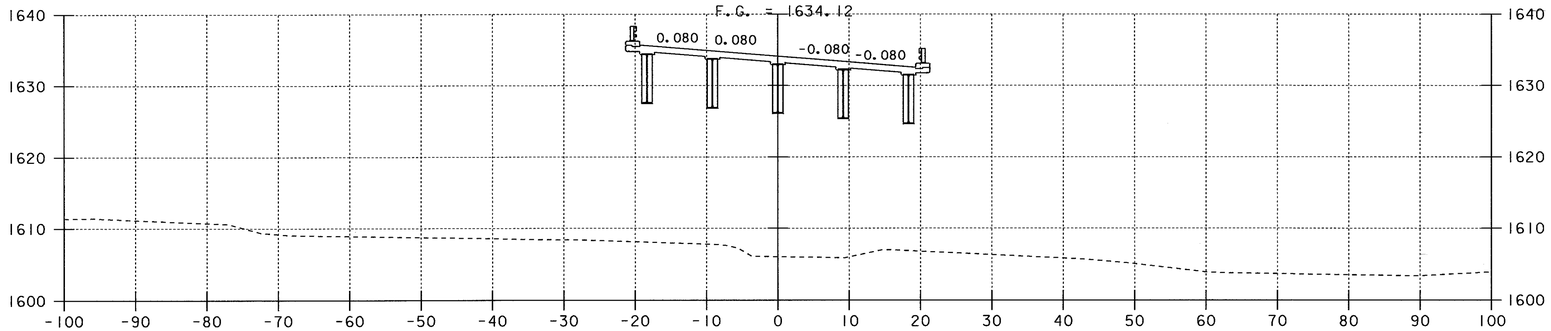

131+50

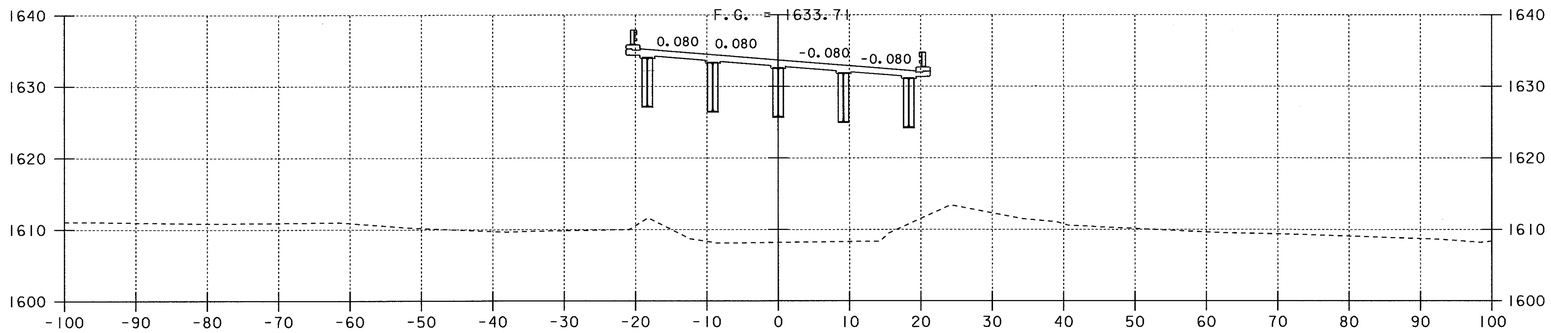

131+00

0 10 20
SCALE IN FEET

PROJECT NAME:	SEARSBURG - WILMINGTON
PROJECT NUMBER:	NHF 010-1(18)
PLOT FILE NAME: DD096X14	PLOT DATE: 10-AUG-2001
PROJECT LEADER: DELLA SANTA	DRAWN BY: SQUAD B
DESIGN FILE NAME: 78D096/DESIGN/DD096CWRK.DGN:	
	SHEET 352 OF 435

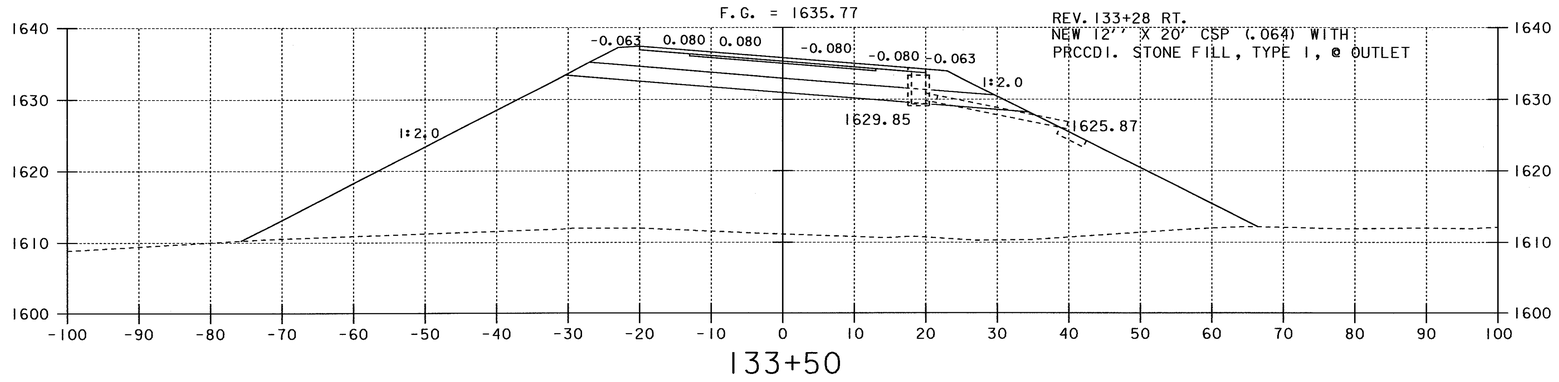

133+50

REV. 133+10.89
END BRIDGE 25A RESUME ROADWAY

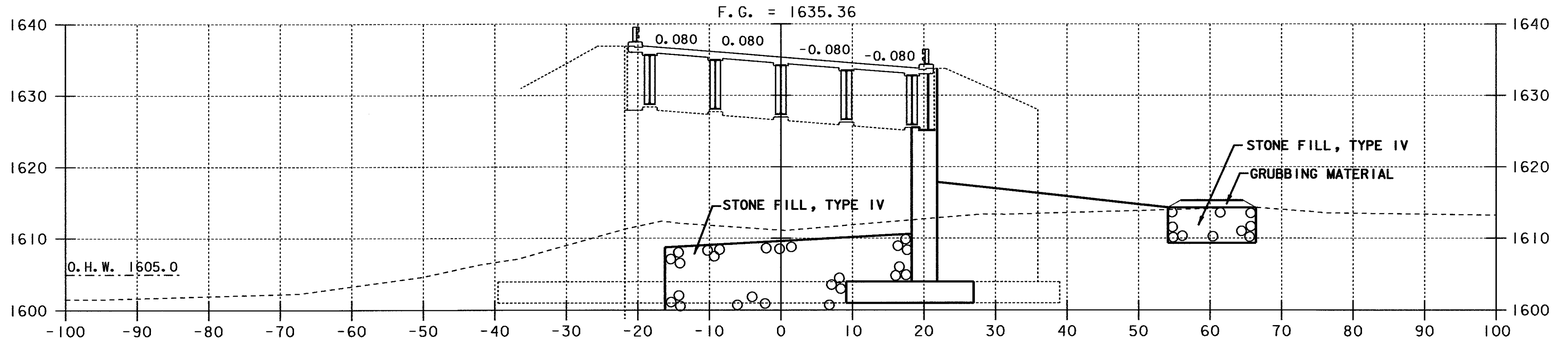

133+00

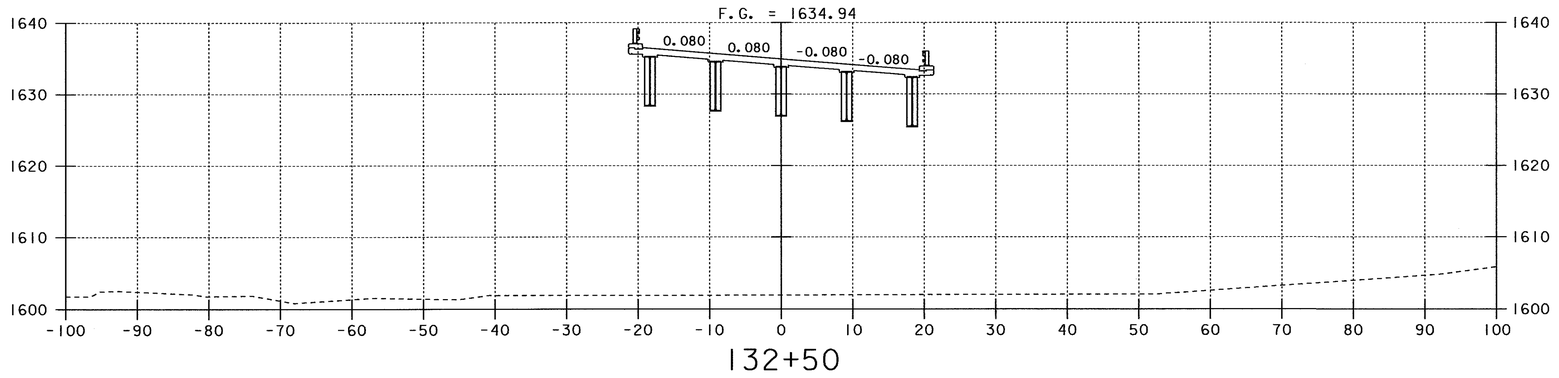

132+50

NOTE:
DASHED LINE INDICATES SUBSTRUCTURE UPSTATION AND/OR DOWNSTATION OF SECTION CUT LINE.

0 10 20
SCALE IN FEET

PROJECT NAME: SEARSBURG - WILMINGTON
PROJECT NUMBER: NHF 010-1(18)

PLOT FILE NAME: DD096X15 PLOT DATE: 18-JAN-2002
PROJECT LEADER: DELLA SANTA DRAWN BY: SQUAD B
DESIGN FILE NAME: 78D096/DESIGN/DD096CWRK.DGN:
SHEET 353 OF 435

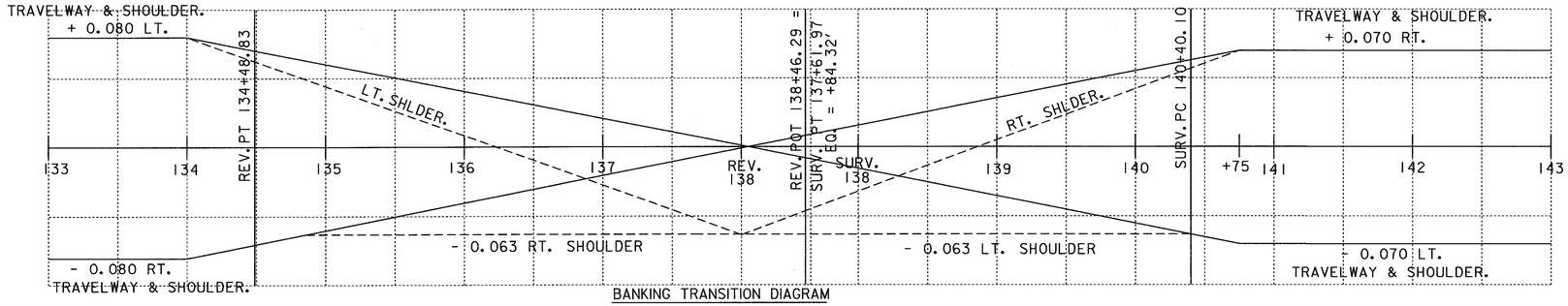

BANKING TRANSITION DIAGRAM

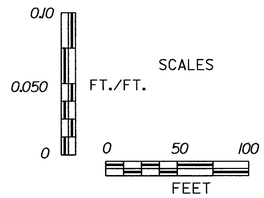

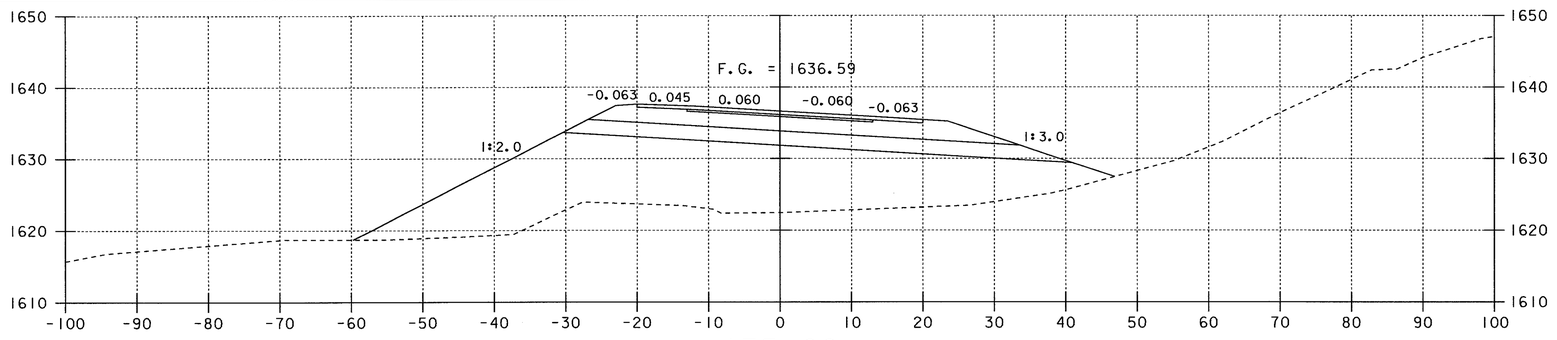

135+00

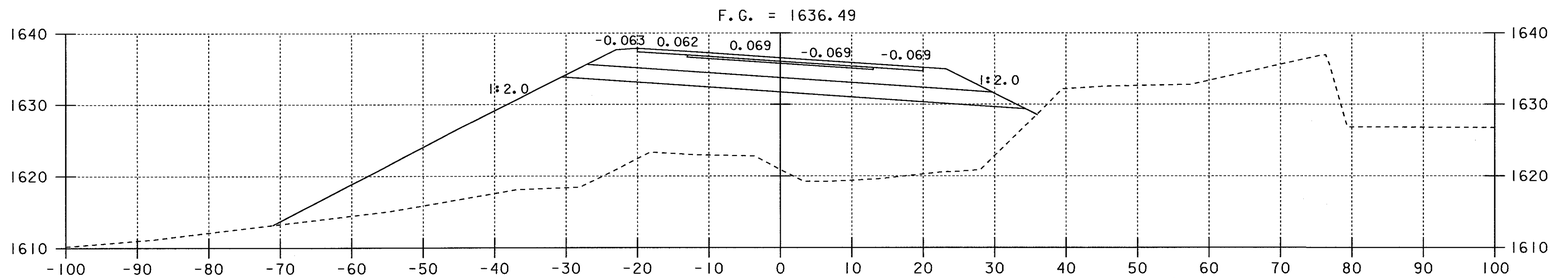

134+50

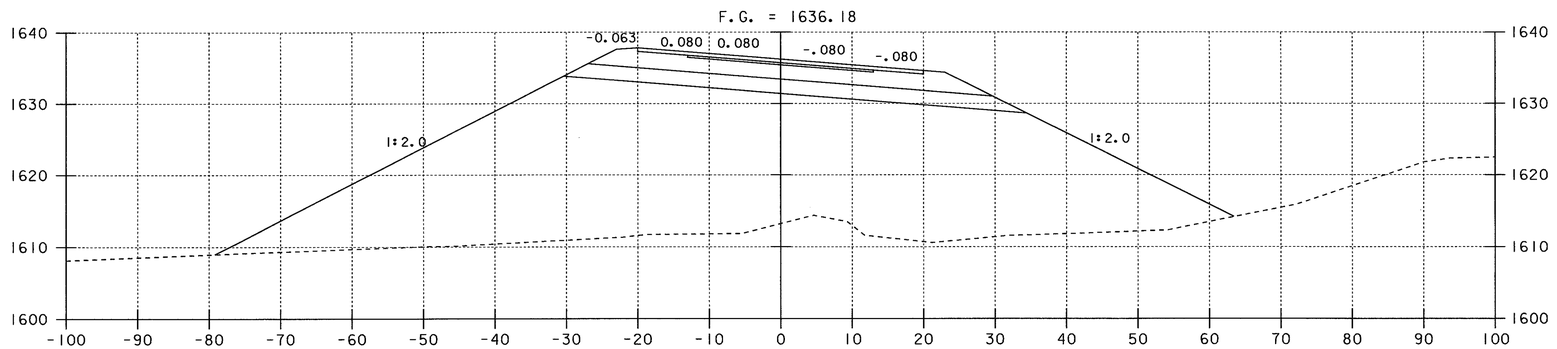

134+00

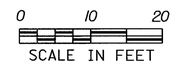

PROJECT NAME:	SEARSBURG - WILMINGTON
PROJECT NUMBER:	NHF 010-1(18)
PLOT FILE NAME: DD096X16	PLOT DATE: 28-NOV-2001
PROJECT LEADER: DELLA SANTA	DRAWN BY: SQUAD B
DESIGN FILE NAME: 78D096/DESIGN/DD096CWRK.DGN:	
	SHEET 354 OF 435

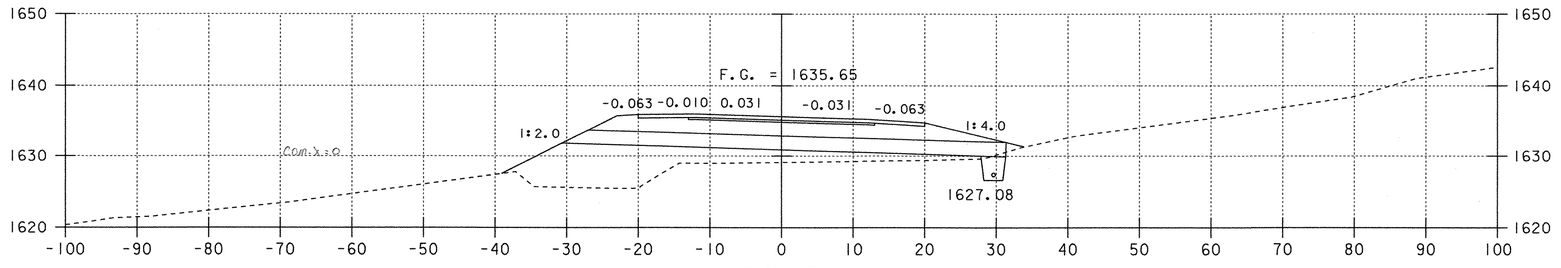

136+50

ZERO AUTHORIZED UNDERCUT

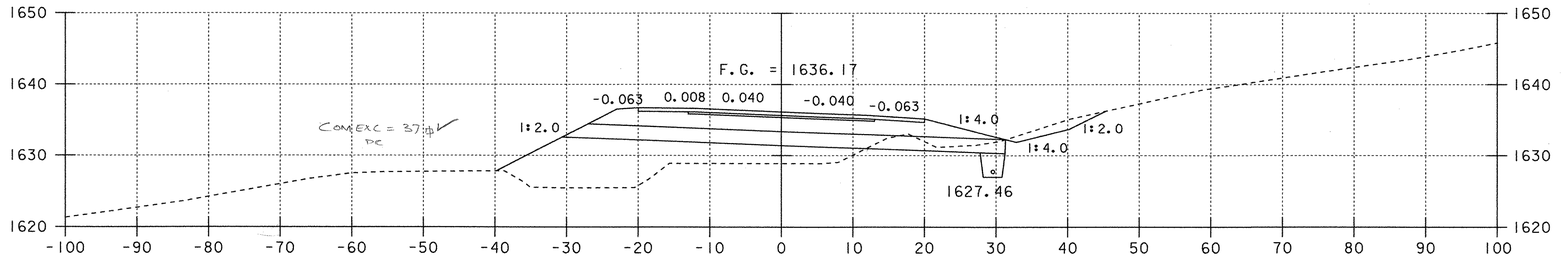

136+00

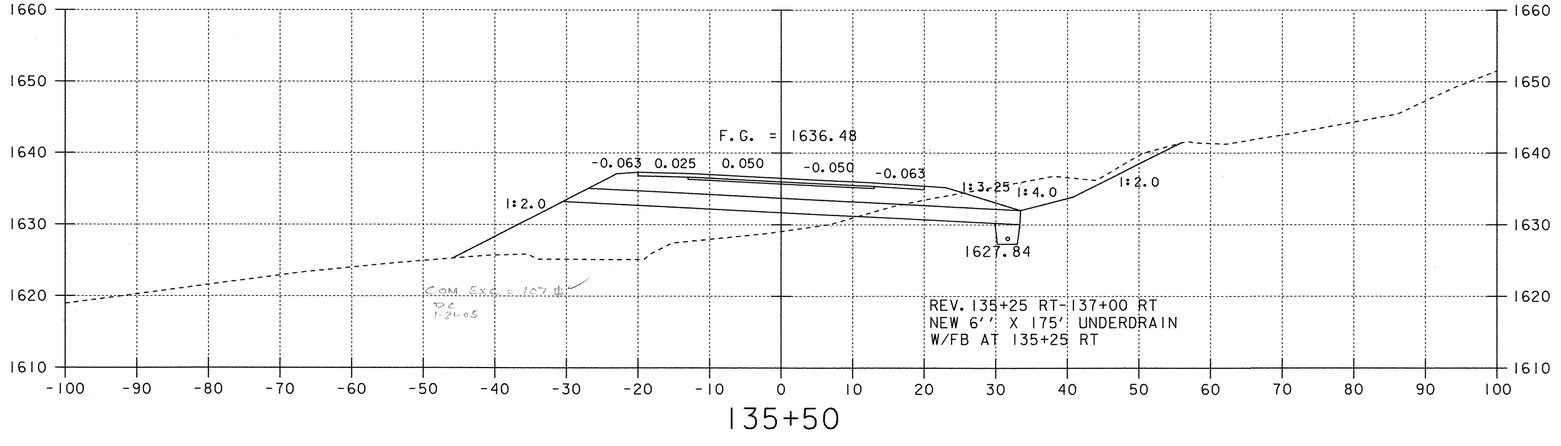

135+50

0 10 20
SCALE IN FEET

DC 2-24-05
BB 1-24-05

PROJECT NAME:	SEARSBURG - WILMINGTON
PROJECT NUMBER:	NHF 010-1(18)
PLOT FILE NAME: DD096X17	PLOT DATE: 29-NOV-2001
PROJECT LEADER: DELLA SANTA	DRAWN BY: SQUAD B
DESIGN FILE NAME: 78D096/DESIGN/DD096CWRK.DGN:	
	SHEET 355 OF 435

REV. POT 138+46.29 =
SURV. PT 137+61.97
EQ. = +84.32'

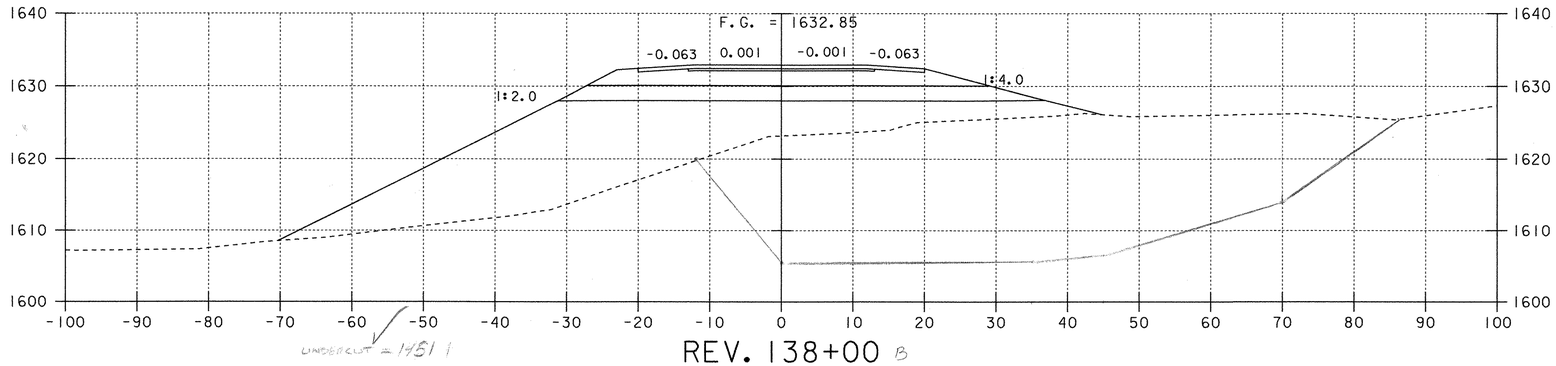

UNDERCUT = 1451 ✓

REV. 138+00 B

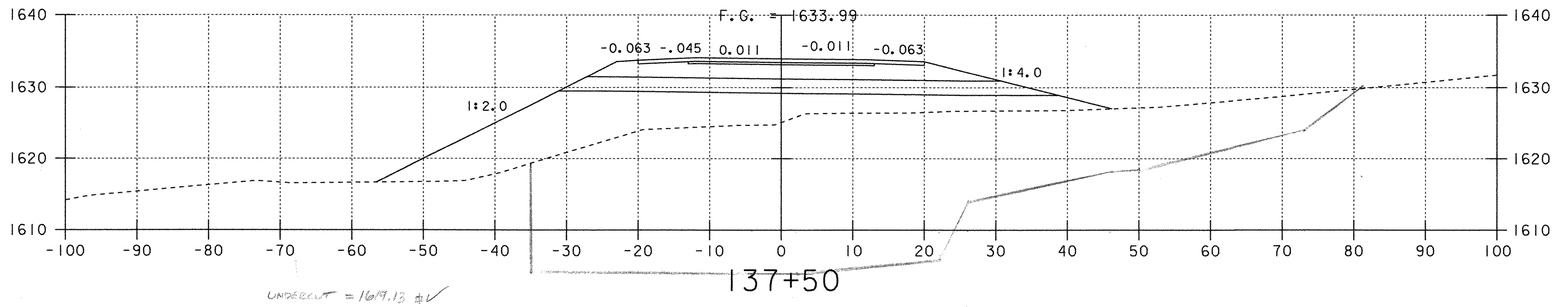

UNDERCUT = 1619.13 # ✓

137+50

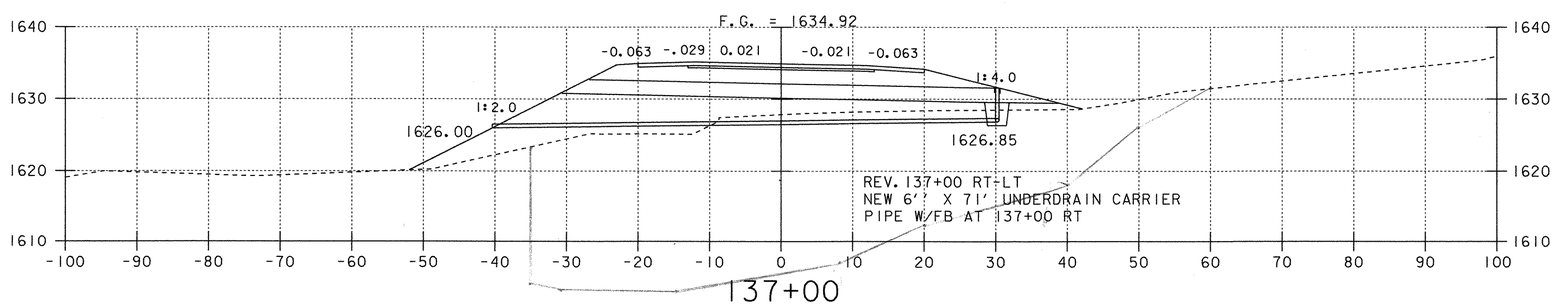

137+00

AUTHORIZED UNDERCUT = 1524.5 # ✓

0 10 20
SCALE IN FEET

Dc 2-24-05
BB 2-24-05

PROJECT NAME:	SEARSBURG - WILMINGTON
PROJECT NUMBER:	NHF 010-1(18)
PLOT FILE NAME: DD096X18	PLOT DATE: 28-NOV-2001
PROJECT LEADER: DELLA SANTA	DRAWN BY: SQUAD B
DESIGN FILE NAME: 78D096/DESIGN/DD096CWRK.DGN:	
	SHEET 356 OF 435

F.G. = 1627.14

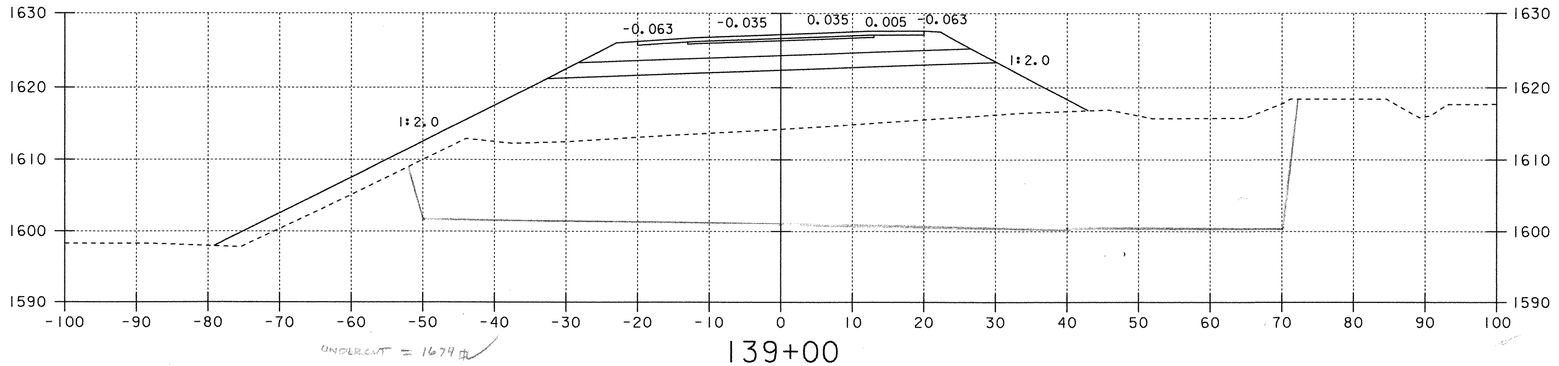

UNDERCUT = 1674 ft

139+00

F.G. = 1628.80

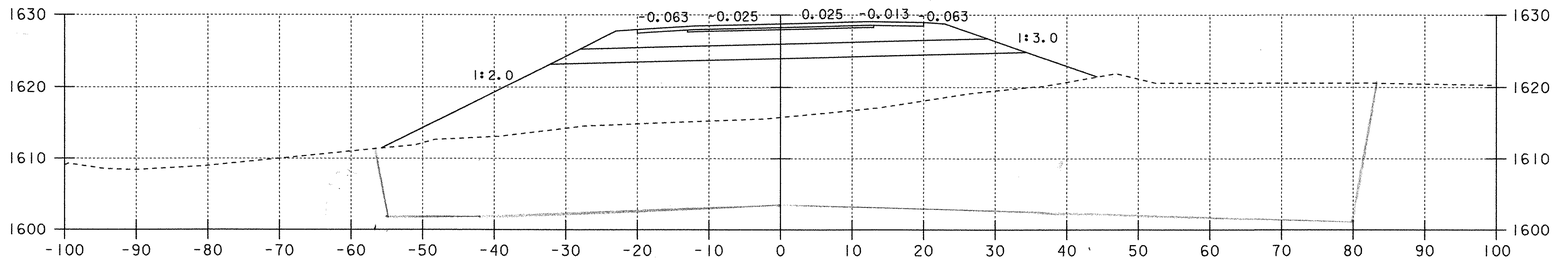

UNDERCUT = 2000 ft

138+50

F.G. = 1630.45

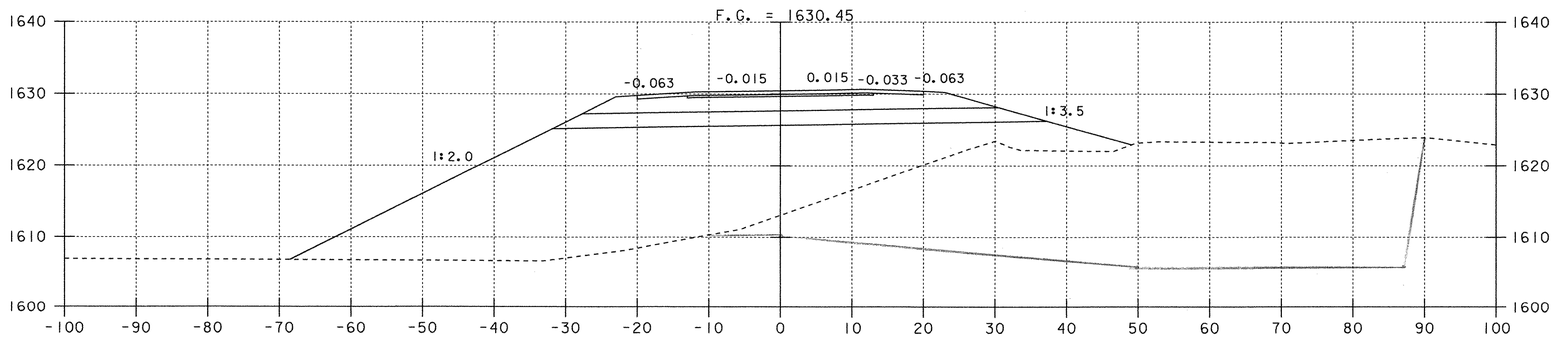

SURV. 138+00 A

AUTHORIZED UNDERCUT = 1293.5 ft

DC 2-24-05
BM 2-25-05

0 10 20
SCALE IN FEET

PROJECT NAME:	SEARSBURG - WILMINGTON
PROJECT NUMBER:	NHF 010-1(18)
PLOT FILE NAME: DD096X19	PLOT DATE: 28-NOV-2001
PROJECT LEADER: DELLA SANTA	DRAWN BY: SQUAD B
DESIGN FILE NAME: 78D096/DESIGN/DD096CWRK.DGN:	
	SHEET 357 OF 435

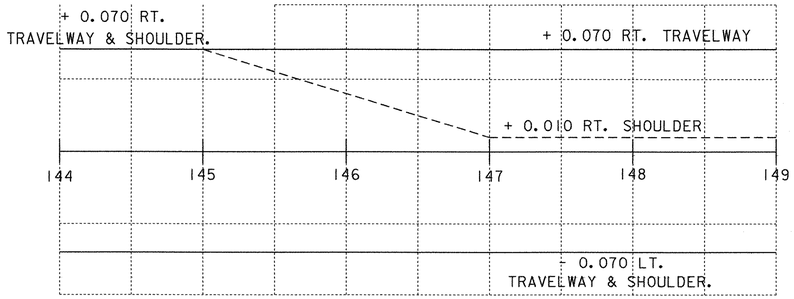

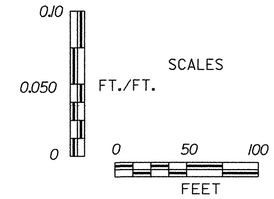

RIGHT SHOULDER BANKING TRANSITION FROM BRIDGE

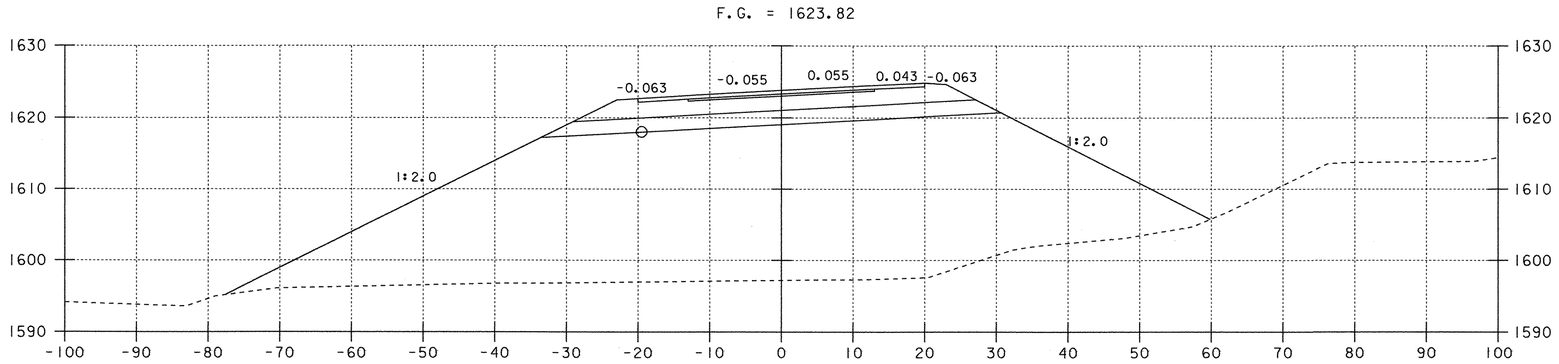

140+00 ZERO UNDERCUT

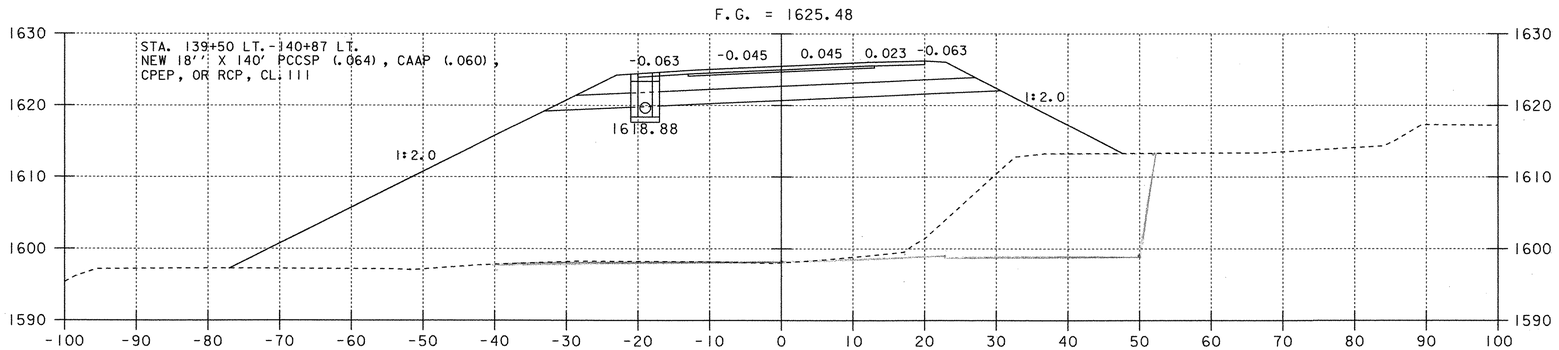

139+50

AUTHORIZED UNDERCUT = 381 ft

DC 2-24-05

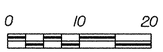

PROJECT NAME:	SEARSBURG - WILMINGTON
PROJECT NUMBER:	NHF 010-1(18)
PLOT FILE NAME: DD096X20	PLOT DATE: 18-JAN-2002
PROJECT LEADER: DELLA SANTA	DRAWN BY: SQUAD B
DESIGN FILE NAME: 78D096/DESIGN/DD096CWRK.DGN:	
	SHEET 358 OF 435

141+72.34
STOP ROADWAY BEGIN BRIDGE 25B

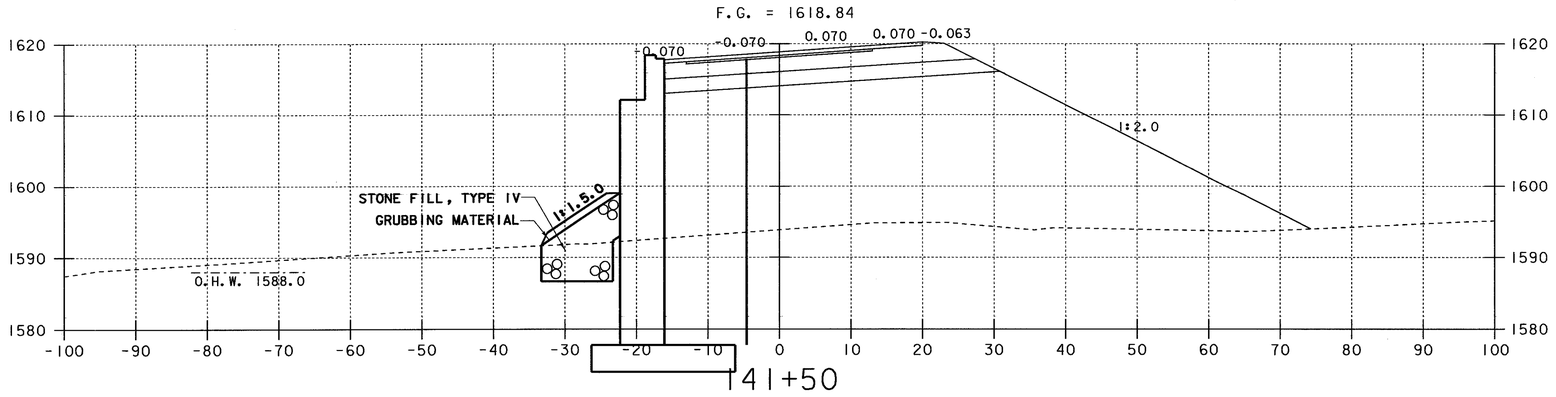

141+50

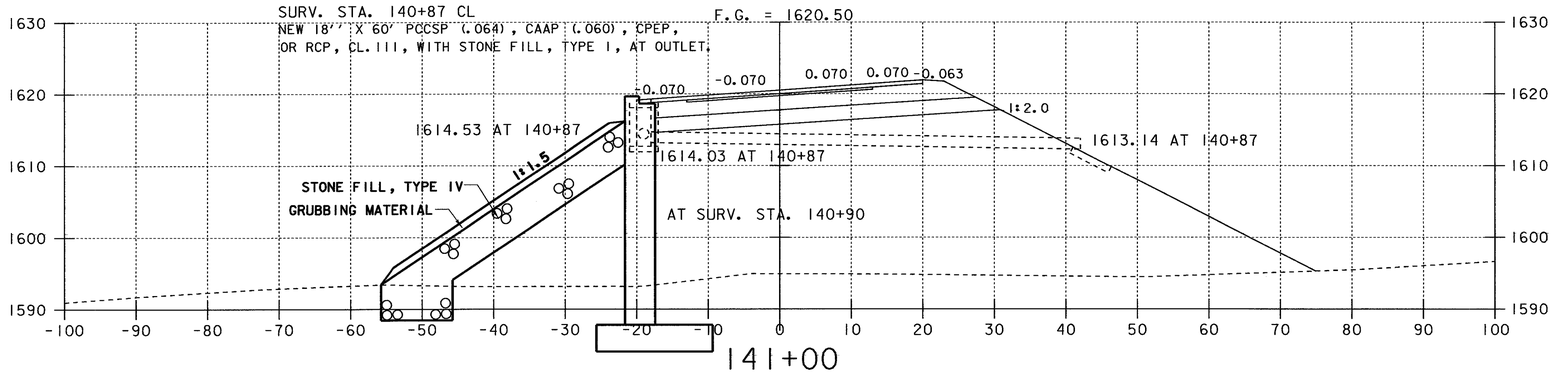

141+00

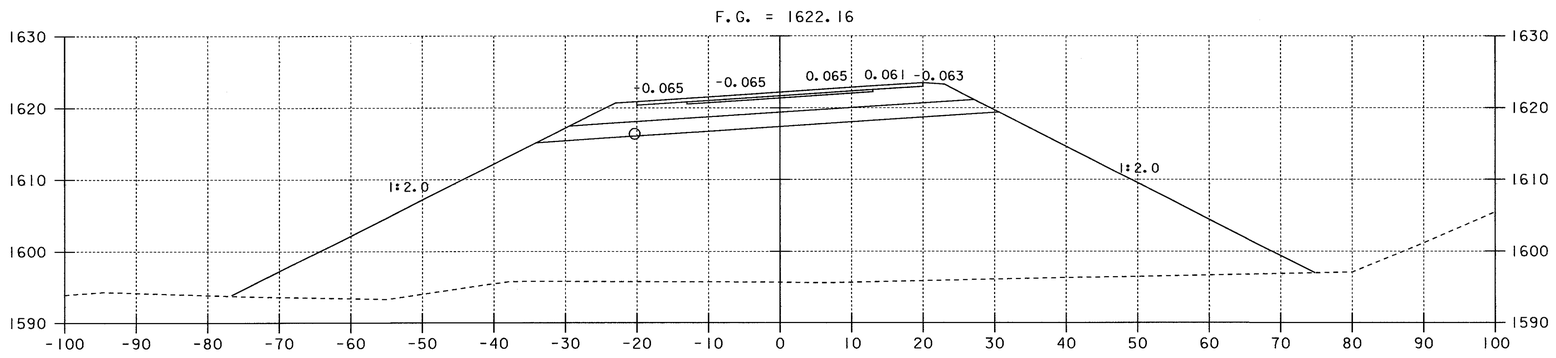

SURV. 140+50

0 10 20
SCALE IN FEET

PROJECT NAME:	SEARSBURG - WILMINGTON
PROJECT NUMBER:	NHF 010-1(18)
PLOT FILE NAME: DD096X21	PLOT DATE: 18-JAN-2002
PROJECT LEADER: DELLA SANTA	DRAWN BY: SQUAD B
DESIGN FILE NAME: 78D096/DESIGN/DD096CWRK.DGN:	
	SHEET 359 OF 435

F.G. = 1613.86

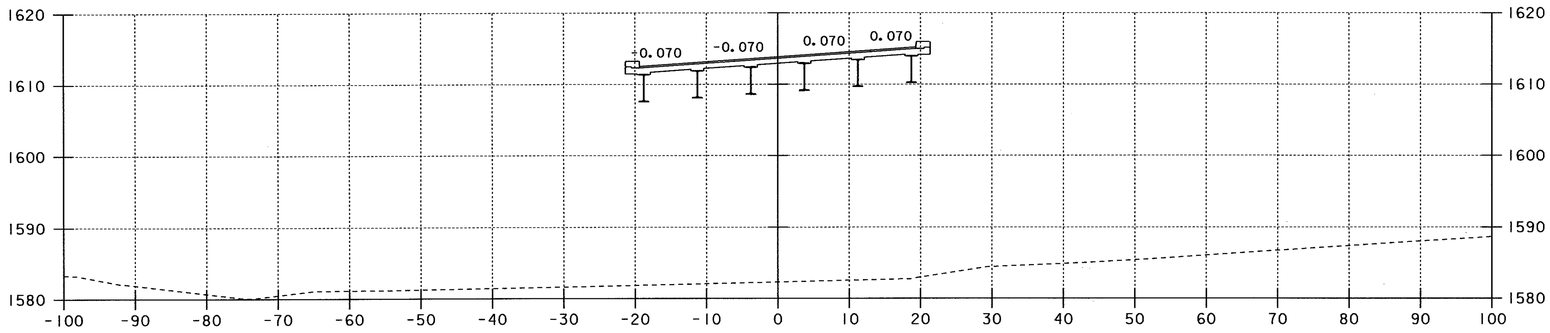

143+00

F.G. = 1615.52

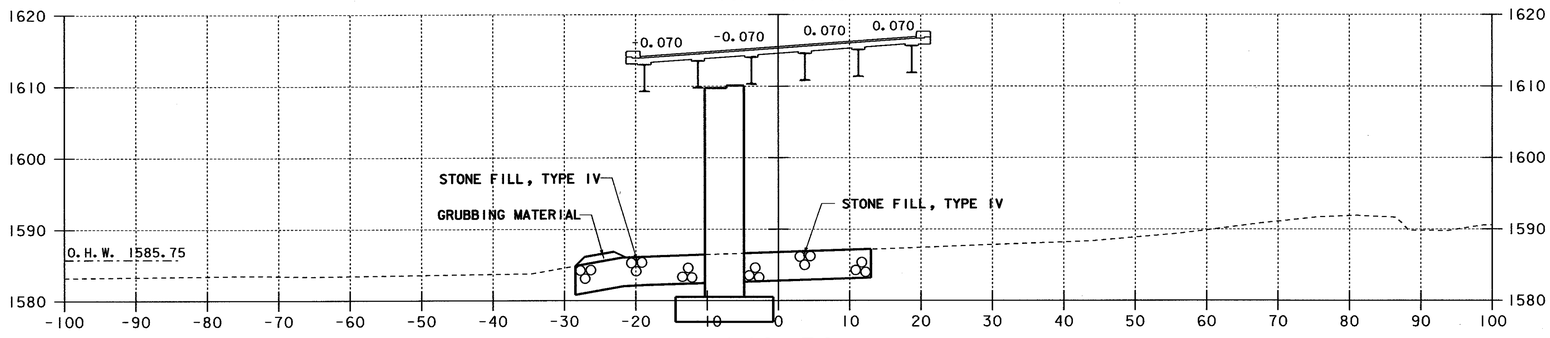

142+50

F.G. = 1617.18

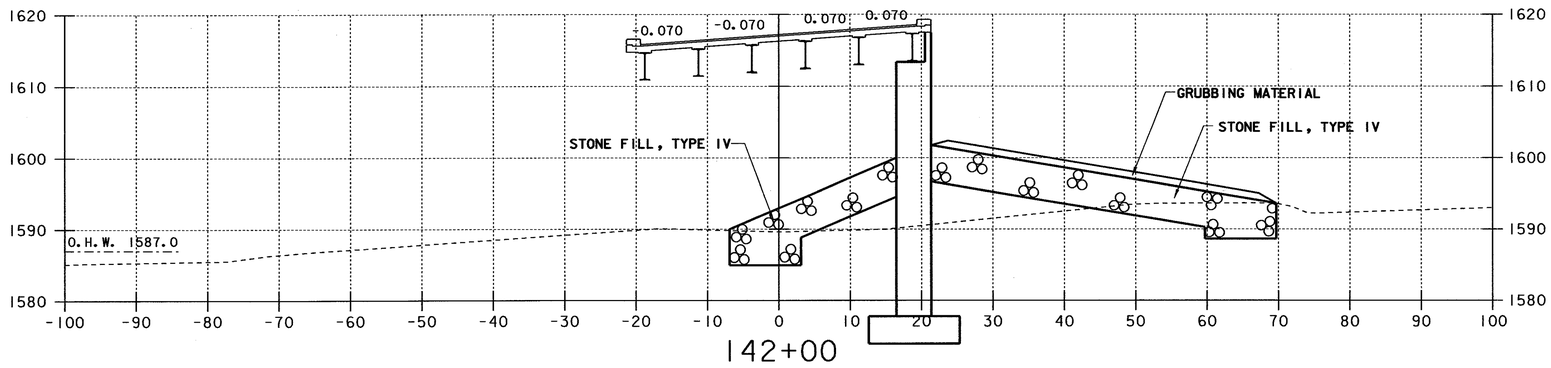

142+00

0 10 20
SCALE IN FEET

PROJECT NAME:	SEARSBURG - WILMINGTON
PROJECT NUMBER:	NHF 010-1(18)
PLOT FILE NAME: DD096X22	PLOT DATE: 11-JUL-2001
PROJECT LEADER: DELLA SANTA	DRAWN BY: SQUAD B
DESIGN FILE NAME: 78D096/DESIGN/DD096CWRK.DGN:	
	SHEET 360 OF 435

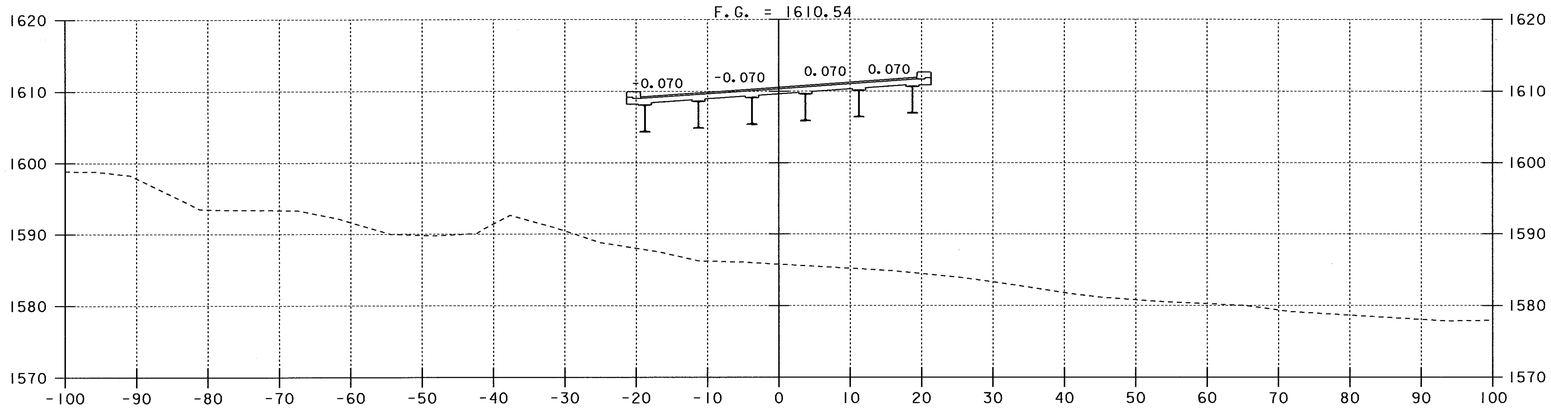

144+00

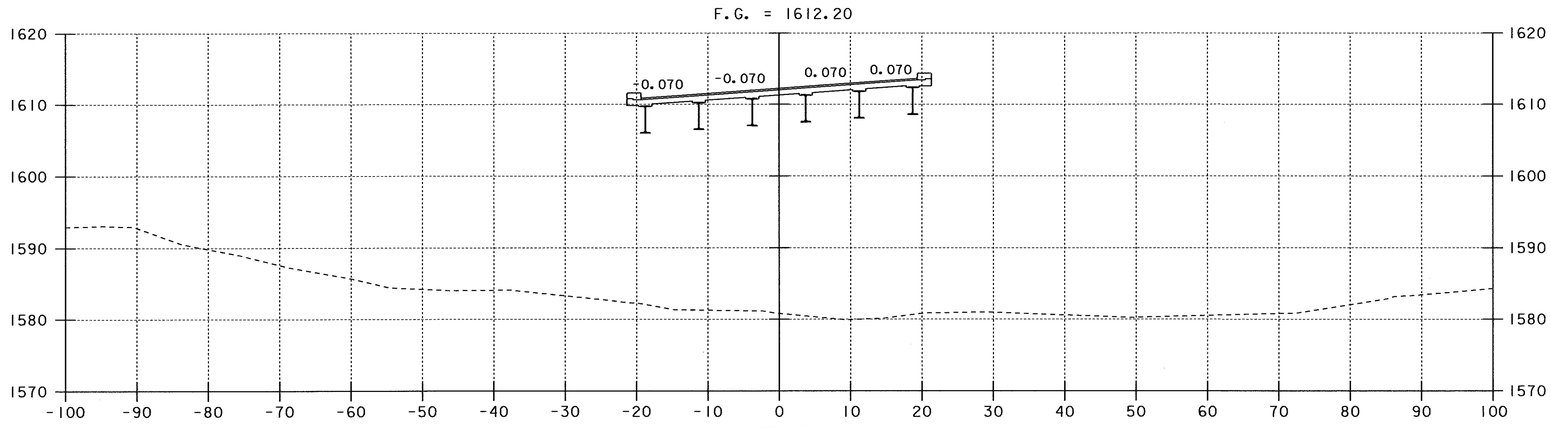

143+50

0 10 20
SCALE IN FEET

PROJECT NAME:	SEARSBURG - WILMINGTON
PROJECT NUMBER:	NHF 010-1(18)
PLOT FILE NAME: DD096X23	PLOT DATE: 10-AUG-2001
PROJECT LEADER: DELLA SANTA	DRAWN BY: SQUAD B
DESIGN FILE NAME: 78D096/DESIGN/DD096CWRK.DGN:	
	SHEET 361 OF 435

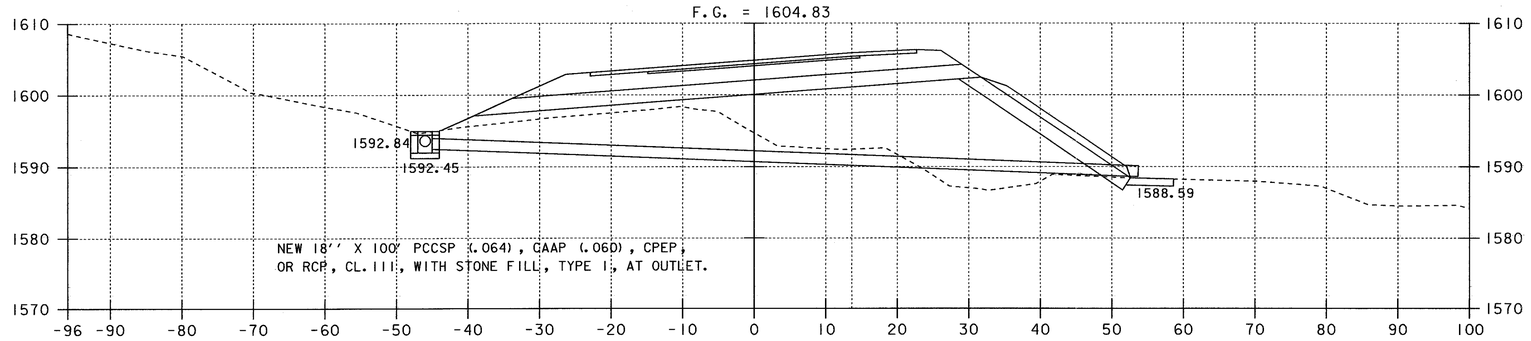

145+77, SKEWED 60°-40'-55'' LT.

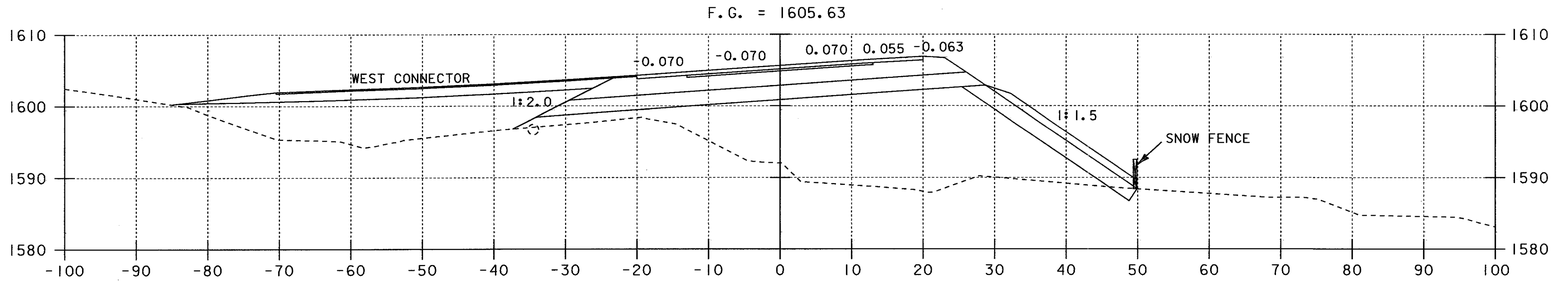

145+50

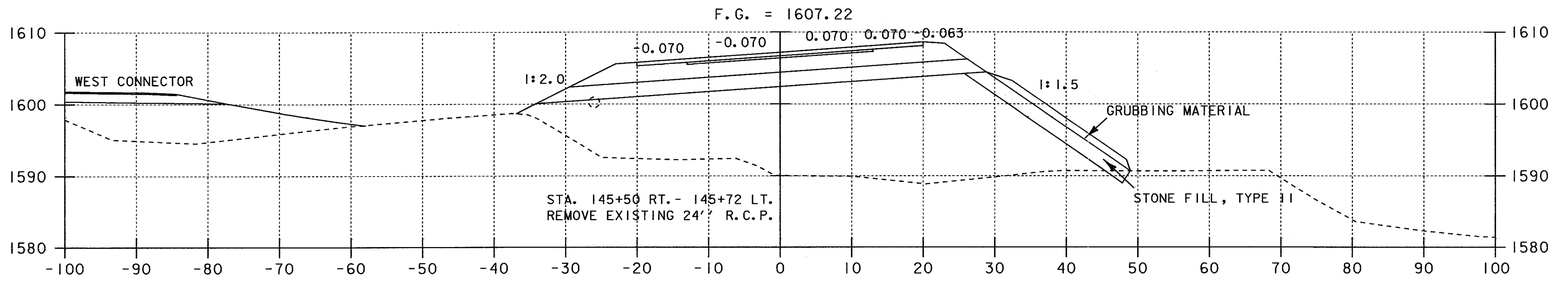

145+00

144+50.34

END BRIDGE 25B RESUME ROADWAY

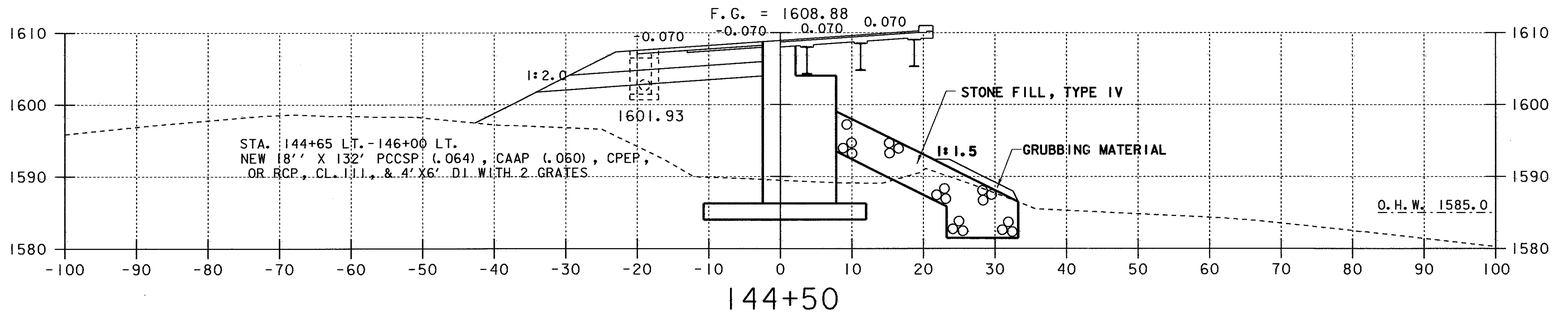

144+50

0 10 20
SCALE IN FEET

PROJECT NAME:	SEARSBURG - WILMINGTON
PROJECT NUMBER:	NHF 010-1(18)

PLOT FILE NAME: DD096X24
PLOT DATE: 18-JAN-2002
PROJECT LEADER: DELLA SANTA
DRAWN BY: SQUAD B
DESIGN FILE NAME: 78D096/DESIGN/DD096CWRK.DGN:
SHEET 362 OF 435

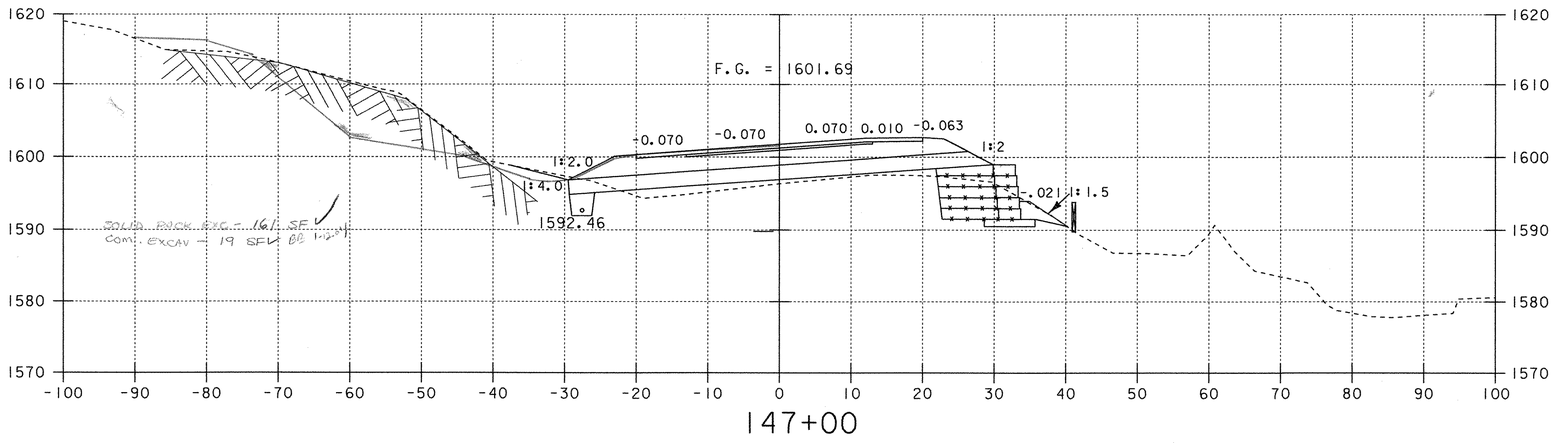

147+00

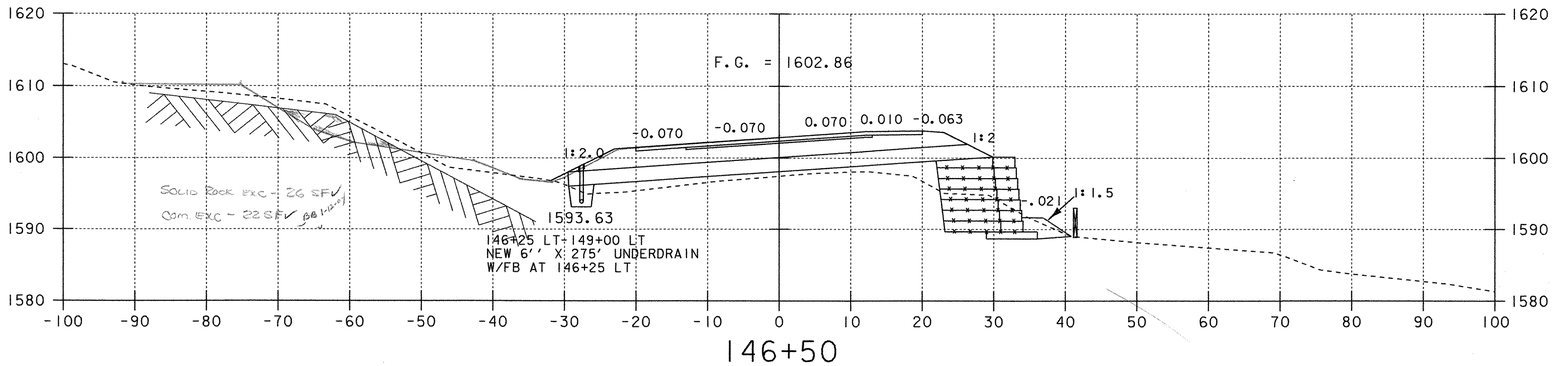

146+50

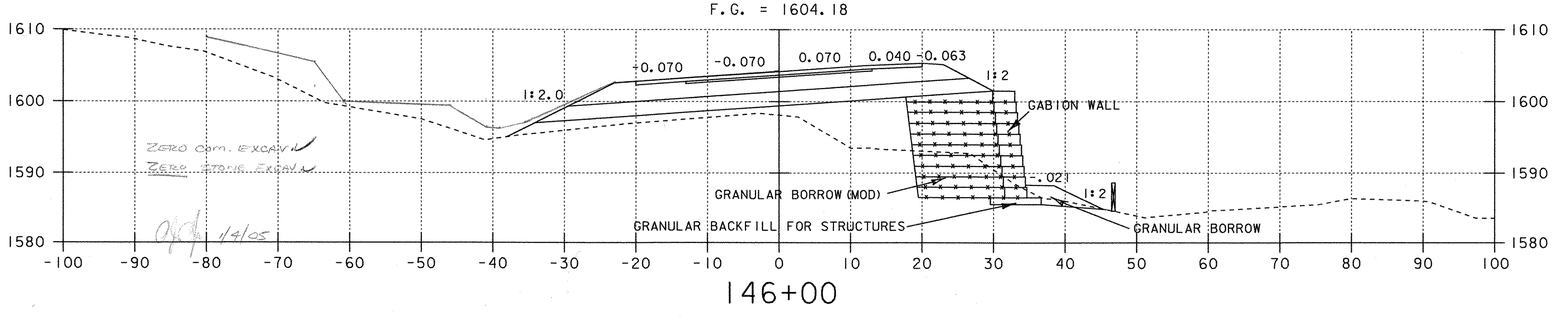

146+00

203.16
SOLID ROCK EXC. 146+0 - 150+0 (LEFT)

STA	DIST	AREA	CY
146+0	50	0 ✓	24.1 ✓
146+50	50	26 ✓	173.1 ✓
147+0	50	161 ✓	408.3 ✓
147+50	50	280 ✓	641.7 ✓
148+0	50	413 ✓	597.2 ✓
148+50	50	232 ✓	324.1 ✓
149+0	50	118 ✓	128.7 ✓ OK
149+50	50	21 ✓	19.4 ✓
150+0		0 ✓	

2316.6 ✓ CY

DC 1-20-05
MHM 1-20-05

TO MISC. ITEM BINDER, PAGE 203.16-1

STA. 145+68 RT ~ 147+28 RT
CONSTRUCT GABION WALL

0 10 20
SCALE IN FEET

PROJECT NAME:	SEARSBURG - WILMINGTON
PROJECT NUMBER:	NHF 010-1(18)
PLOT FILE NAME:	DD096X25
PLOT DATE:	29-NOV-2001
PROJECT LEADER:	DELLA SANTA
DRAWN BY:	SQUAD B
DESIGN FILE NAME:	78D096/DESIGN/DD096CWRK.DGN:
SHEET	363 OF 435

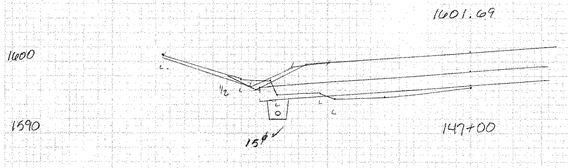

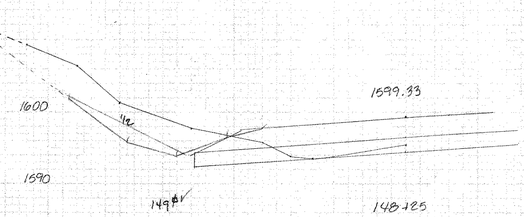

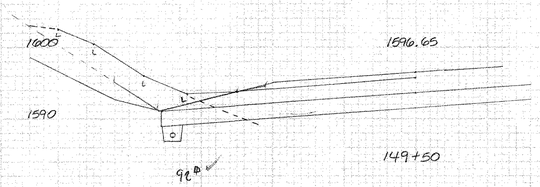

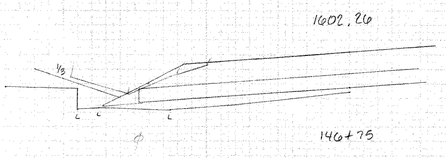

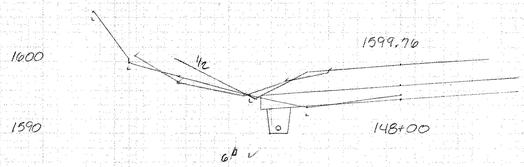

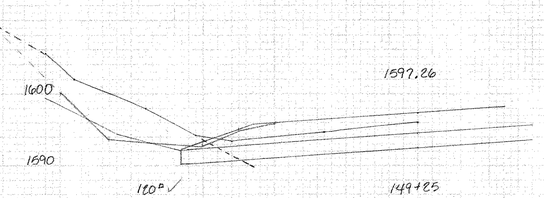

Item 203.16 Solid Rock Excavation

Item 203.20

Sta	Area	Ovst	Vol cy	Width ft	Area sy
146+00	0.0	25	0		
+25	0.0	25	0		
+50	0.0	25	0	0	
+75	0.0	25	0		8.3
147+00	15	25	6.9		
+25	10	25	11.6	3	27.8
+50	37	25	21.8		
+75	32	25	31.9	7	19.4
148	6	25	17.0		
+25	149	25	71.8	0	22.2
+50	88	25	109.7		
+75	85	25	56.9	8	33.3
149	38	25	33.8		
+25	120	25	78.1	4	30.6 30.5
+50	92	25	98.1		
+75	0.0	25	48.6	7	19.4
150+	~~BOOK 1 PAGE 71~~ SEE NOTE BELOW MHM 1-21-05		575.8 cy	0	160.7 sy 12/8/03 CWG

Q'ties V 1/21/05

12/8/03 CWG

161.0 4/25/04 Jwl MJ

M, MJ, 4/25/04

COMMENT:
THIS QTY OF 203.16 IS FROM WORK DONE PRIOR TO THE ADDITIONAL LEDGE BEING REMOVED FOR INCREASED SITE DISTANCE. THIS QTY IS NOT TO BE INCLUDED IN THE FINAL 203.16 QTY. THE LEDGE REMOVAL QTY TO BE PAID AS 203.16 IS CALCULATED ON PLAN SHEET 363 OF 435 (CROSS SECTION SHEET).
MHM 1-21-05

Book 1A Page 59

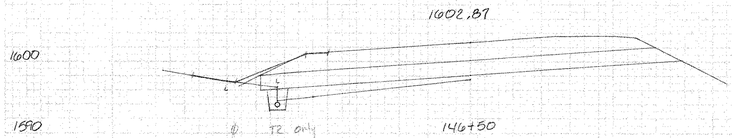

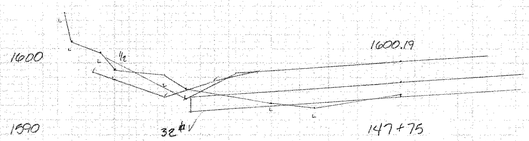

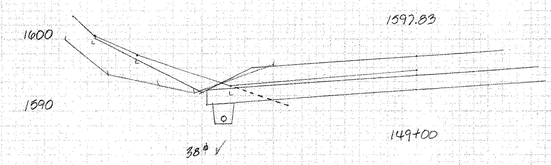

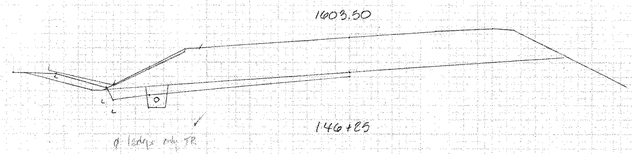

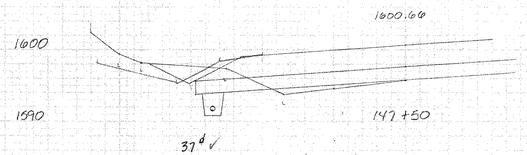

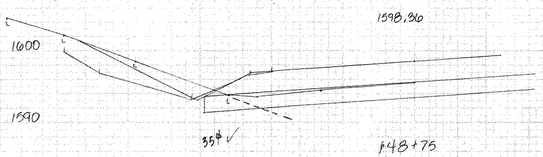

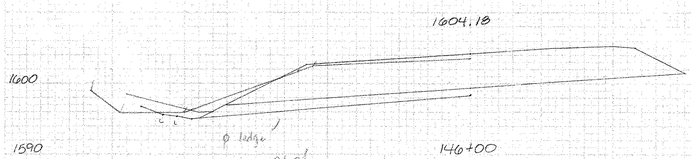

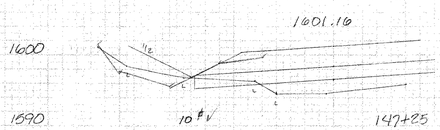

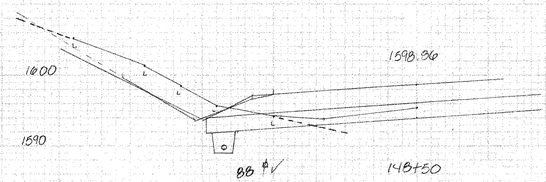

SEARSBURG - WILMINGTON
NH-F010-1(18)

Searsburg - Wilmington

Ledge

146+00 ~ 149+50

(PRE- EXTRA WORK ORDER #13)

SHEET 363A OF 435

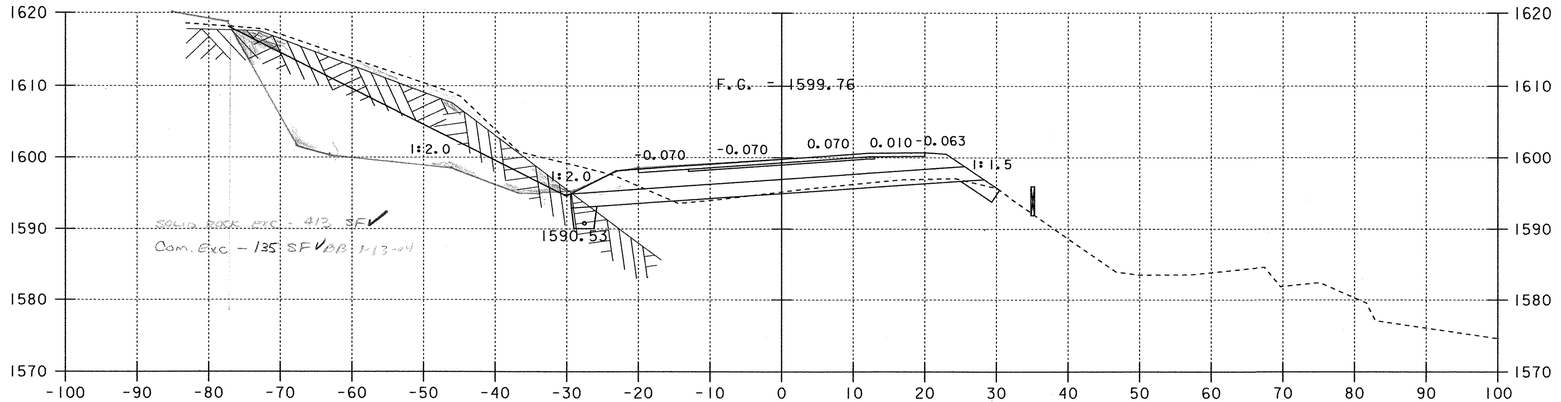

148+00

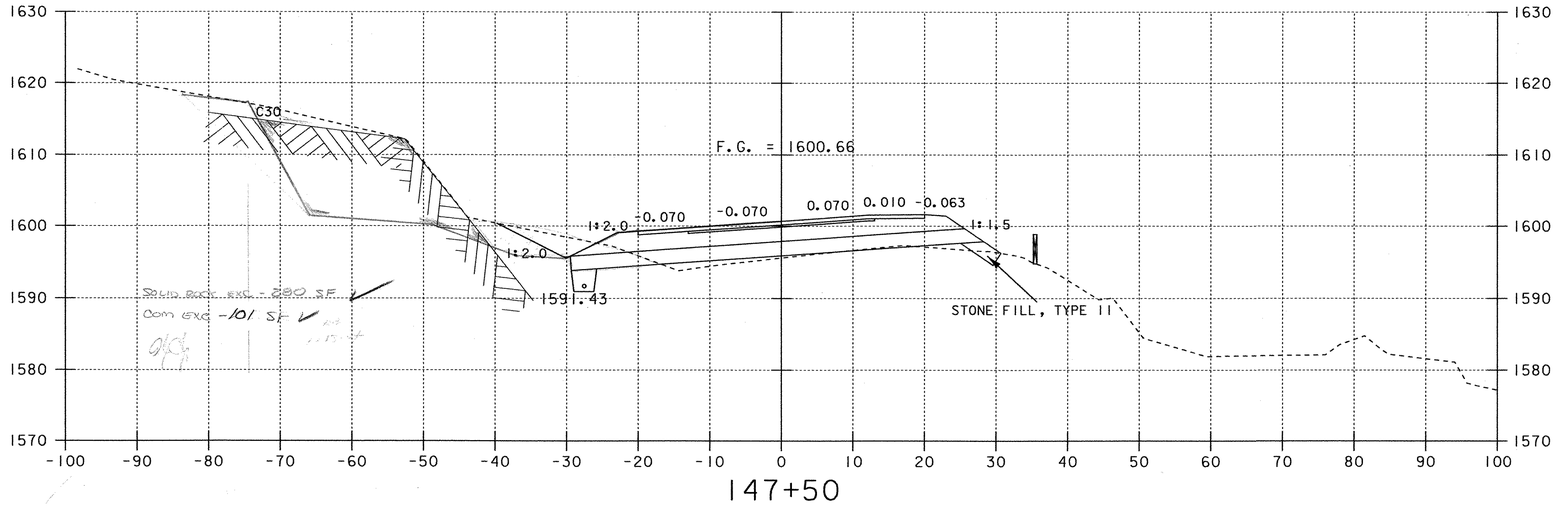

147+50

0 10 20
SCALE IN FEET

PROJECT NAME:	SEARSBURG - WILMINGTON
PROJECT NUMBER:	NHF 010-1(18)
PLOT FILE NAME: DD096X26	PLOT DATE: 29-NOV-2001
PROJECT LEADER: DELLA SANTA	DRAWN BY: SQUAD B
DESIGN FILE NAME: 78D096/DESIGN/DD096CWRK.DGN:	
	SHEET 364 OF 435

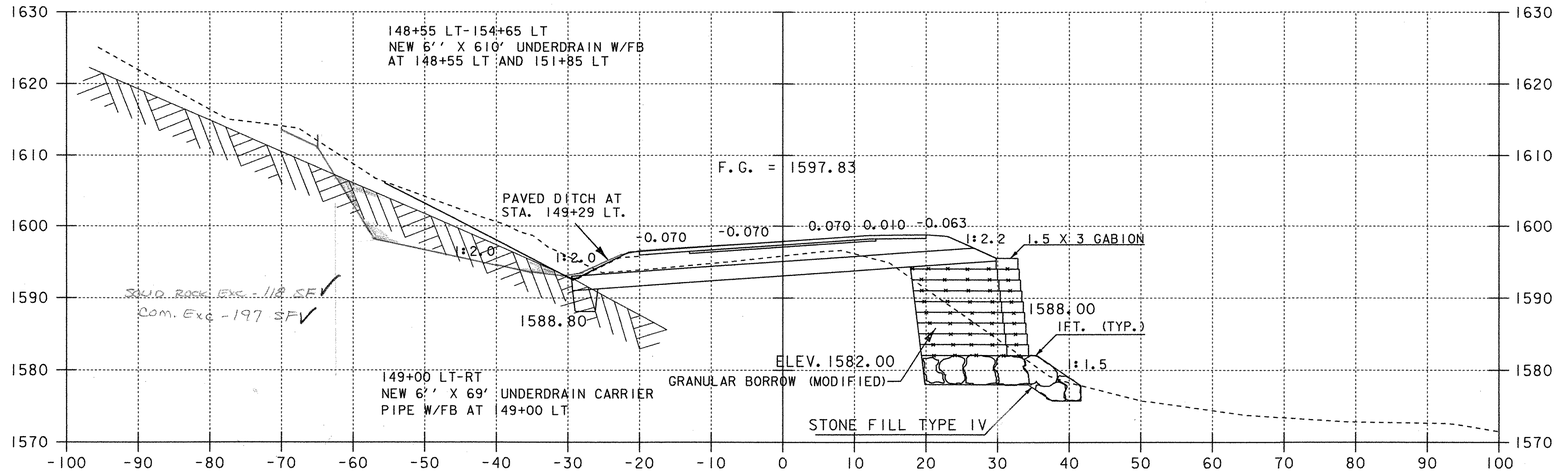

149+00

STA. 148+75 RT~ 152+25 RT
CONSTRUCT GABION WALL

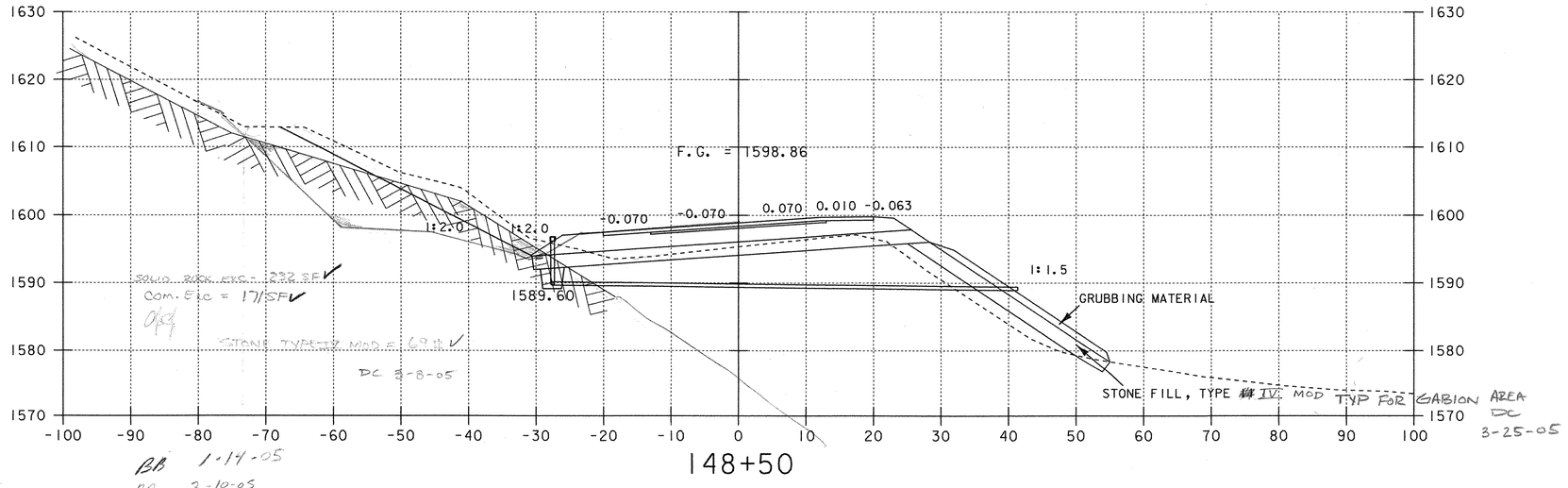

148+50

BB 1-14-05
BB 3-10-05

0 10 20
SCALE IN FEET

PROJECT NAME:	SEARSBURG - WILMINGTON
PROJECT NUMBER:	NHF 010-1(18)
PLOT FILE NAME: DD096X27	PLOT DATE: 20-FEB-2002
PROJECT LEADER: DELLA SANTA	DRAWN BY: SQUAD B
DESIGN FILE NAME: 78D096/DESIGN/DD096CWRK.DGN:	
	SHEET 365 OF 435

SEARSBURG – WILMINGTON
NHF 010-1 (18)
STA 149+50 to 151+00
SHEET 366 OF 435

120 100 80 60 40 20 ℄ 20 40 60 80 100 120

1620 1610 1600 1590

STONE FOUNDATION
SNOW FENCE
1592.30
EP
1:2
Com Exc - 205 SF
1582.88
151+00 1579
1:1.5
O.H.W. 1571.00
E. River

1593.89
EP EP
SNOW FENCE
1:2
Com. Exc - 159 SF
1583.75
150+50
ELEV. 1579
1:1.5
O.H.W. 1571.50

STA 150+50 LT ~ 154+50 LT
NEW 6' WIDE BY 400' LONG
SODDED GUTTER

1595.34
1-2
EP EP
1-4
1:2
TYPICAL FOR GABION WALL
GRANULAR BORROW MODIFIED
ZERO SOLID ROCK EXC.
Com Exc - 180 SF
1585.56
150+00 FILL
ELEV. 1580
1:1.5
PTH
STRUCTURAL EXCAVATION
O.H.W. 1572.00
E. River

STA. 150+00 LT. - STA. 151+50 LT.
NEW 15" X 156" CSP (.064) W/M.E.S. AT INLET AND OUTLET

1596.66
EP
1-2
1-4
.070 .070 .010
1:2
1.5 X 3 GABION
SOLID ROCK EXC - 21 SF
Com Exc 144 SF
1587.37
149+50
ELEV. 1580
INLET
1:1.5
STONE FILL TYPE IV
DC 3-24-05
O.H.W. 1574.50
E. River

KEUFFEL & ESSER CO. PLATE 3, CROSS SECTION

SHEET 366 OF 435

FINAL SURVEY — NOTE BOOK — SURVEYED — PLOTTED — TEMPLATE — AREAS — AREAS CHECKED — NO — BY — DATE

ORIGINAL SURVEY — NOTE BOOK — SURVEYED — PLOTTED — TEMPLATE — AREAS — AREAS CHECKED — NO — BY — DATE

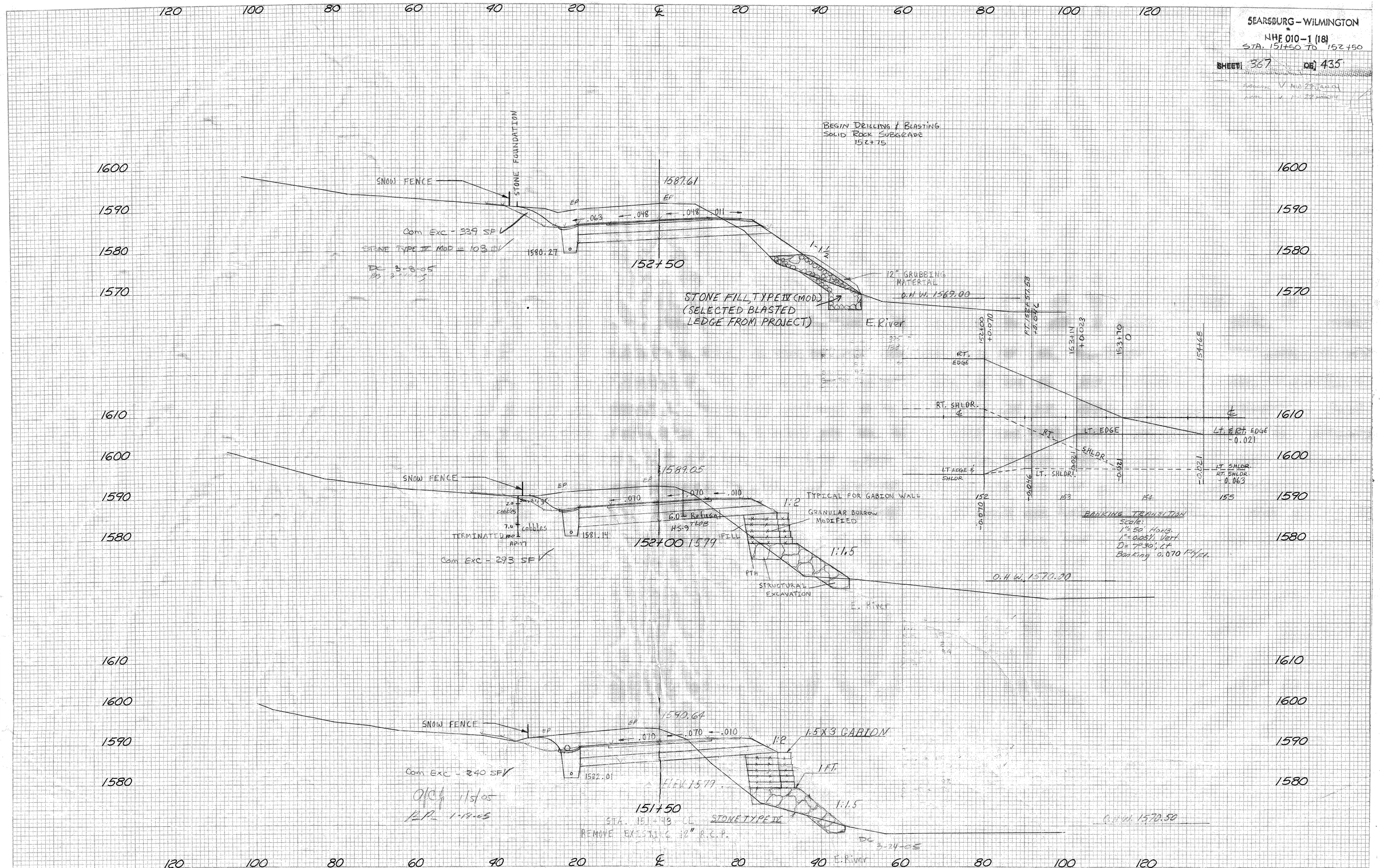
SEARSBURG – WILMINGTON
NHF 010-1 (18)
STA. 151+50 TO 152+50
SHEET 367 OF 435
BEGIN DRILLING & BLASTING
SOLID ROCK SUBGRADE
152+75
STONE FOUNDATION
SNOW FENCE
1587.61
EP
.063
.048
.048
.011
Com Exc - 339 SF
STONE TYPE IV MOD = 103
1580.27
152+50
1-1½
12" GRUBBING MATERIAL
O.H.W. 1569.00
STONE FILL, TYPE IV (MOD.)
(SELECTED BLASTED
LEDGE FROM PROJECT)
E. River
RT. EDGE
RT. SHLDR.
LT. EDGE
LT. & RT. EDGE
-0.021
LT. EDGE & SHLDR
LT. SHLDR.
RT. SHLDR.
-0.063
152
153
154
155
BANKING TRANSITION
Scale:
1"=50' Horiz.
1"=0.05' Vert.
D=7°30', Lt
Banking 0.070 Ft/Ft.
1589.05
.070
.070
.010
1:2
TYPICAL FOR GABION WALL
GRANULAR BORROW MODIFIED
6.0 Refusal
HS-9
TERMINATED
AP-17
1581.14
152+00
1579
1:1.5
PTH
STRUCTURAL EXCAVATION
O.H.W. 1570.00
Com Exc - 293 SF
1590.64
1:2
1.5X3 GABION
1 FT.
1:1.5
Com Exc - 240 SF
1582.01
ELEV. 1579
151+50
STA. 151+43 - CL
STONE TYPE IV
REMOVE EXISTING 12" R.C.P.
O.H.W. 1570.50
DC 3-24-05
E. River
KEUFFEL & ESSER
PLATE 3, CROSS SECTION
SHEET 367 OF 435

SEARSBURG – WILMINGTON
NHF 010-1 (18)
STA. 153+00 to 154+00
SHEET 368 OF 435

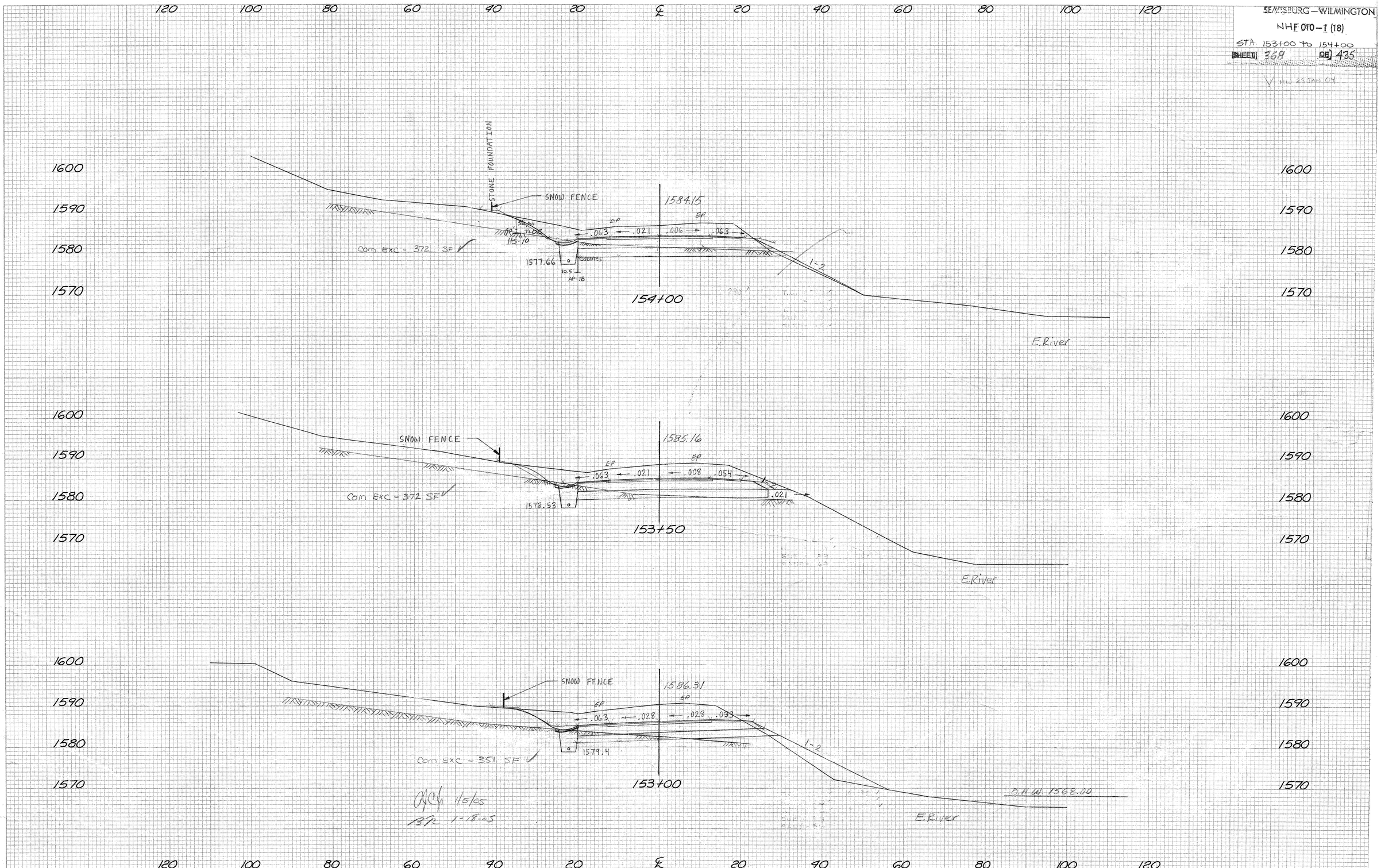

FINAL SURVEY | NOTE BOOK | NO. | SURVEYED | PLOTTED | TEMPLATE | AREAS | AREAS CHECKED | BY | DATE

ORIGINAL SURVEY | NOTE BOOK | NO. | SURVEYED | PLOTTED | TEMPLATE | AREAS | AREAS CHECKED | BY | DATE

KEUFFEL & ESSER A GRATIOT Company PLATE 3, CROSS SECTION

SEARSBURG – WILMINGTON

NHF 010-1 (18)

STA. 154+60 To 157+00

SHEET 369 OF 435

V NO SCALE

H 1"=20' 2/20/99 ORIGINAL GRADE FROM SECTION FILES 1610-1502

FINAL SURVEY — NOTE BOOK — NO. — SURVEYED — PLOTTED — TRIP PLATE — AREAS — AREAS CHECKED — DATE — BY

ORIGINAL SURVEY — NOTE BOOK — NO. — SURVEYED — PLOTTED — TRIP PLATE — AREAS — AREAS CHECKED — DATE — BY — R.J.Jeffress 12/1/99

120 100 80 60 40 20 ℄ 20 40 60 80 100 120

1610 1600 1590 1580

Com Exc - 809 SF
STONE TYPE IV MOD = 33 ☐Y

1580.50
.010 .057 .057 .063
1575.0
157+00
-4.3860 %
1572.5
157+00 LT. - RT.
NEW 6" x 57' UNDERDRAIN CARRIER PIPE W/ FB @ 157+00 LT.
12" GRUBBING MATERIAL

Com Exc-299 SF
STONE TYPE IV MOD = 29 ☐Y

1581.00
.022 .036 .036 .063
1575.25
156+50

Com Exc - 196 SF
230 SF
STONE TYPE IV MOD = 22 ☐Y

1581.50
.045 .016 .021 .063
1575.5
156+00

* Excavation For Stone Fill will be Included In Common Excavation

* Keyway Not Installed 155+00 ~ 161+00

Com Exc - 361 SF
STONE TYPE IV MOD
17 ☐Y
DC 3-8-05

1582.00
.063 .003 .021 .063
1575.75
155+50
STONE FILL, TYPE II (MOD) (SELECTED BLASTED LEDGE FROM PROJECT)
12" GRUBBING MATERIAL
EXCAVATION FOR STONE FILL WILL BE INCLUDED IN COMMON EXCAVATION (TYP.)

Com Exc - 327 SF

1582.59
.063 .114 .021 .063
1576.0
155+00

154+70 LT. ~ 157+00 LT.
NEW 6" x 230' UNDERDRAIN W/ FB @ 154+70 LT.

154+65 C.L.
REMOVE EXIST. 18" RCP
NEW 18" x 64' PCCSP(.064) CAPP(.060) RCP CLASS III OR CPEP W/ STONE FILL, TYPE I @ OUTLET

SNOW FENCE

1583.29
.063 .021 .016 .063
1576.52
DT @ 154+65 C.L.
Inv. 1576.0
154+50
Inv. 1574.1
El. 1573.9

SOLID ROCK EXC - 0 SF
Comm Exc - 388 SF
OK to Pay 1/6/05
R.P. 1-18-05

℄ Laser

1547+68 +0.021 | 1547+68 +0.063 | PC 1547+82 +0.042 | 1554+66 -0.021 | 1554+66 -0.063 | 1554+66 +0.021 | 1554+66 +0.063

LT. EDGE
LT. SHLDR.
℄
LT & RT. EDGE -0.021
RT. SHLDR -0.063
RT. EDGE & SHLDR -0.042

155 156 157 158

BANKING TRANSITION
SCS13:
1"=50' HOR.
1"=0.05' VERT.
D= 4.00' Ext
BANK = 0.063 Ft/Ft.

K-E PLATE 3, CROSS SECTION
KEUFFEL & ESSER CO

SHEET 369 OF 435

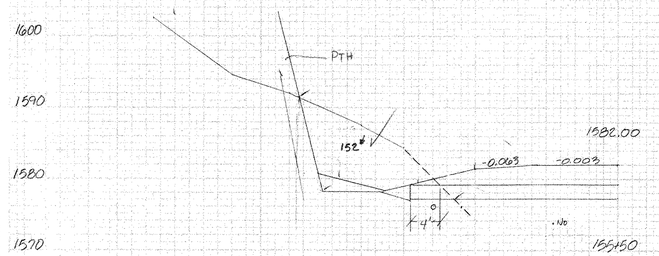

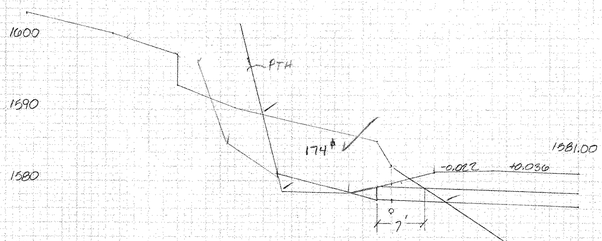

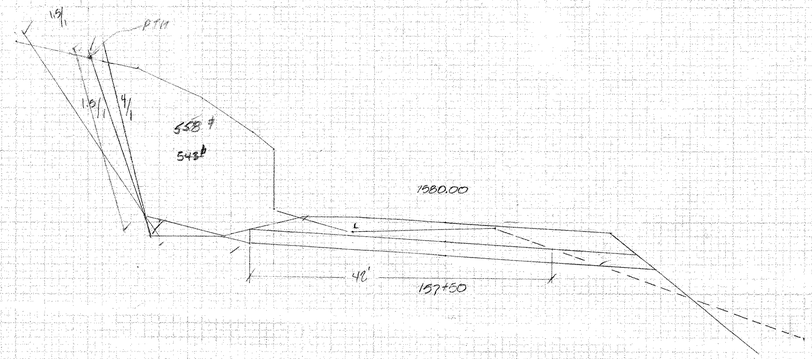

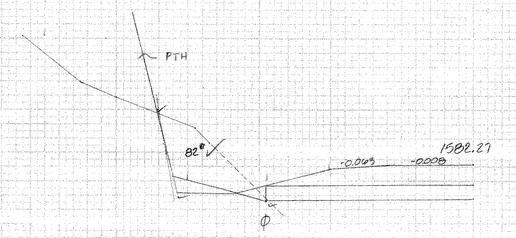

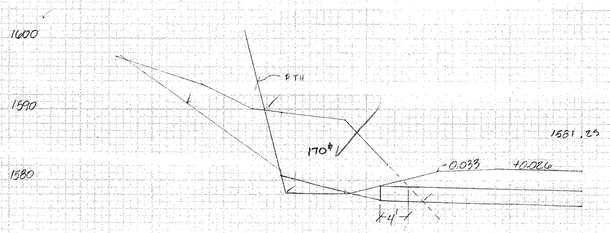

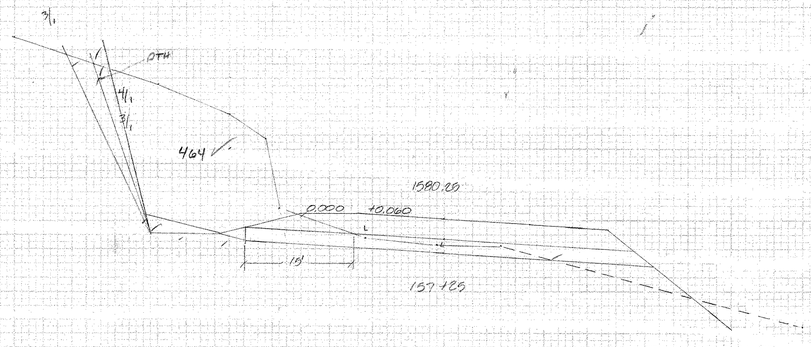

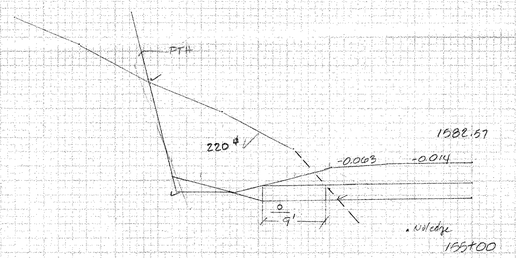

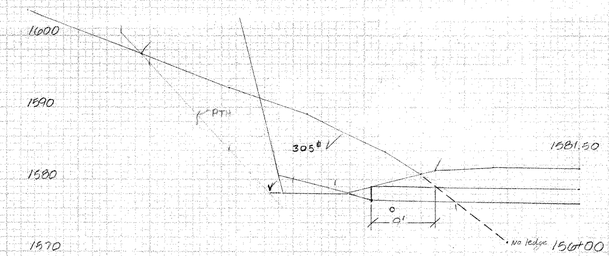

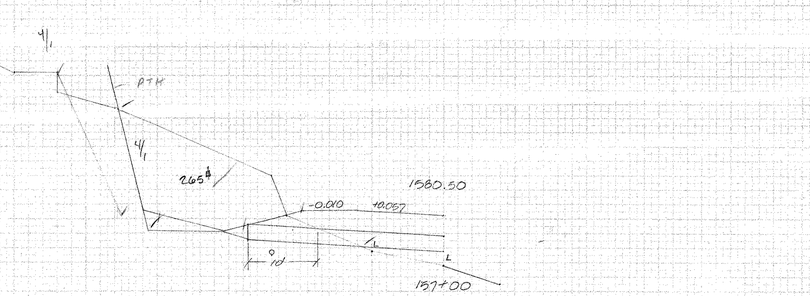

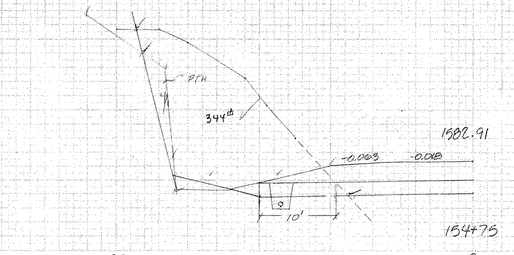

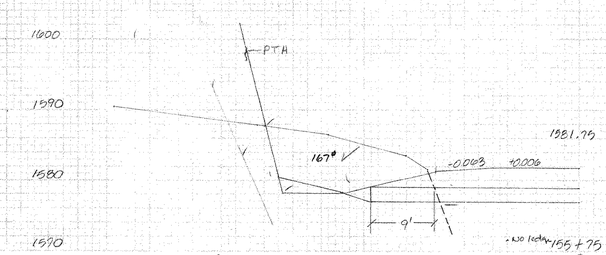

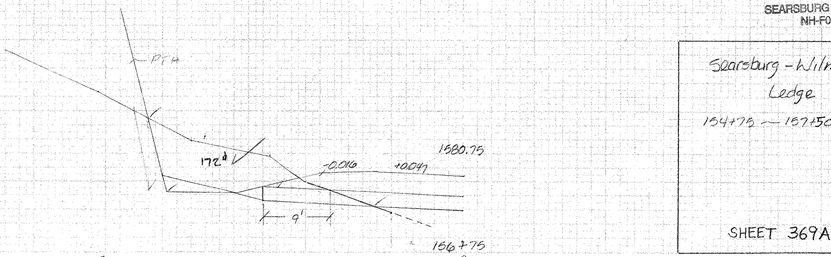

50 ℄ 50 ℄ 50 ℄

SEARSBURG - WILMINGTON
NH-F010-1(18)

Searsburg - Wilmington
Ledge
154+75 — 157+50

SEARSBURG – WILMINGTON

NHE 010-1 (18)

STA. 157+50 TO 159+50

SHEET 370 OF 435

W MW2 only

✓ MW 20 FEB 04 ORIGINAL GLOBE SECTIONS DATA 10/10 - 15/02

FINAL SURVEY — NOTE BOOK — NO. — SURVEYED — PLOTTED — TEMPLATE — AREAS — AREAS CHECKED — BY — DATE

ORIGINAL SURVEY — NOTE BOOK — NO. — SURVEYED — PLOTTED — TEMPLATE — AREAS — AREAS CHECKED — BY — DATE

120 100 80 60 40 20 ℄ 20 40 60 80 100 120

1620 1610 1620 1610 1620 1610 1620 1610 1620 1610

1580 1570 1580 1570 1580 1570 1580 1570

1578.00 1578.50 1579.00 1579.50 1580.00

1594+50 1594+00 1584+50 1584+00 1574+50

1-1.25

1-1½ Com Exc - 468 SF ✓

1-1½ Com Exc - 480 SF ✓

1½-1 Com Exc - 435 SF ✓

1-1½ 1½-1 Com Exc - 590 SF ✓

1-1½ 1½-1 Com Exc - 341 SF ✓

3-1 1-4 2-1 1-4 1-4 1-4 1-4 1-4 1-4 1-4 1-4 1-4

INSIDE SLOPE

E.P.

Otis Creek Elev 1578.2

T/G 1576.6

INV. 1573.0

120" TERMINATED HS-11

INV. 1569.1

159+80 RT. NEW 12" x 14' CSP(.064) W/ PRECOIL

.010 — 4.442 — .063

EXCAVATION FOR STONEFILL WILL BE INCLUDED IN COMMON EXCAVATION. END DUMPING BLASTING, SOLID ROCK SUBGRADE 1577.50

STONE TYPE III MOD = 156 #

STONE TYPE III MOD = 95 #

STONE TYPE III MOD = 93 #

STONE TYPE III MOD = 48 #

STONE TYPE III MOD = 21 #

DC 3-9-05

12" SAND BORROW

12" GRUBBING MATERIAL

10.0 — AP-19

54" CP

E. RIVER

STA 158+70 C.L. NEW 29" X 68" PCC SP (.064) OR CAAP (.060) OR CPEP W/DITCH CHECK @ INLET

D.H.W. 1556.75

D.H.W. 1558.00

D.H.W. 1558.50

D.H.W. 1559.00

Sta. 158+70 C.L. Remove Existing 24" RCP

* KEYWAY NOT INSTALLED 159+00 = 1614.00 (NOT PLANIMETERED FOR COMMON EXC.)

BB 1-19-05

MB 3-10-05

K-E PLATE 3, CROSS SECTION KEUFFEL & ESSER CO

SHEET 370 OF 435

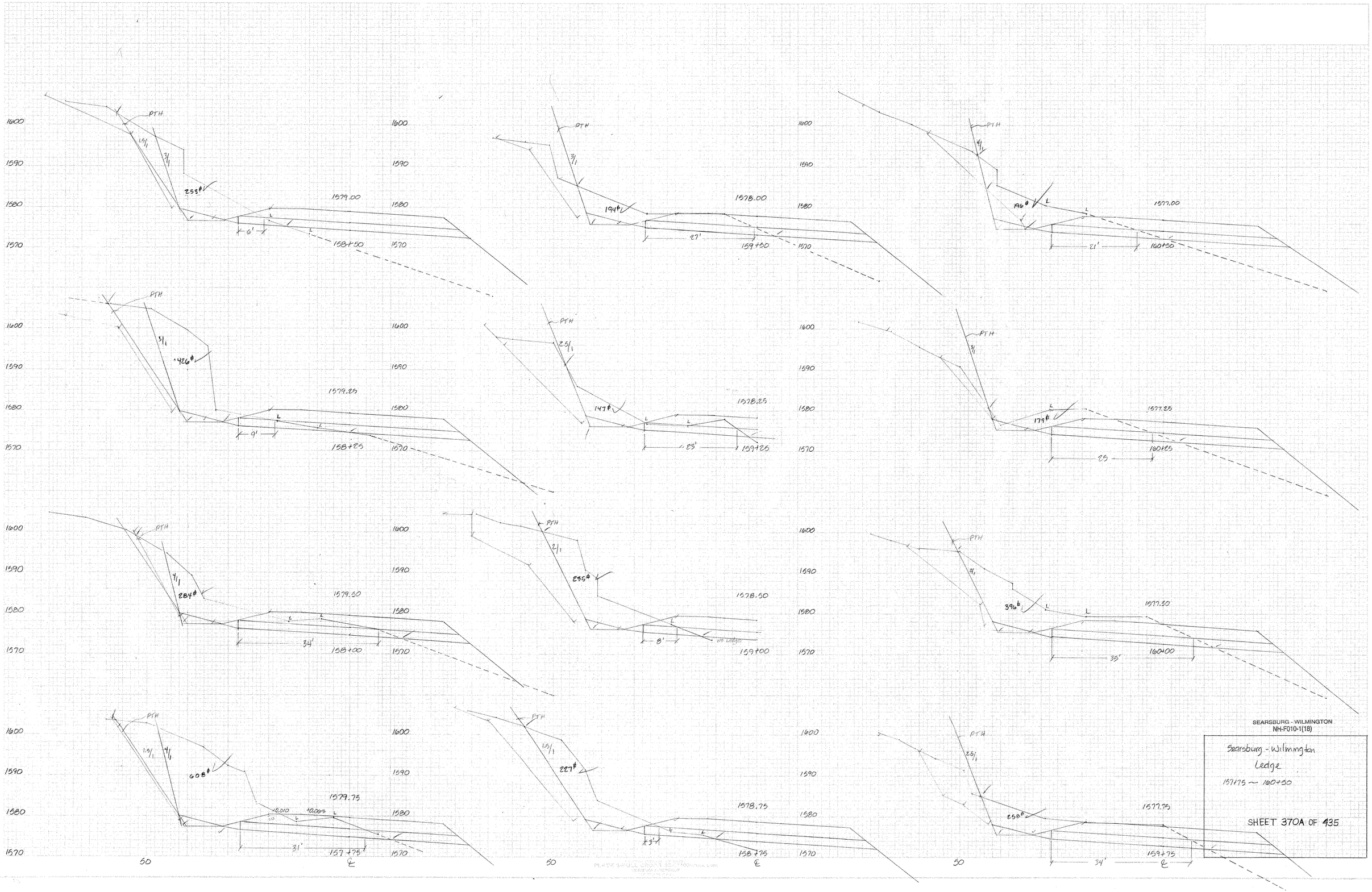

SEARSBURG - WILMINGTON
NH-F010-1(18)

Searsburg - Wilmington
Ledge
157+75 ~ 160+50

SHEET 370A OF 435

SEARSBURG – WILMINGTON
NHF 010-1 (18)
STA. 160+00 To 162+00
SHEET 371 OF 435

V MW 23 JAN 04
V MW 20 FEB 04 CATCHBASIN EDGE X-SEC'D 10/10/-10/10 1/2

FINAL SURVEY
ORIGINAL SURVEY
NOTE BOOK
NO.
SURVEYED
PLOTTED
TEMPLATE
AREAS
AREAS CHECKED
BY
DATE

120 100 80 60 40 20 ℄ 20 40 60 80 100 120

1620 1610 1620 1610 1600 1610 1600 1610 1600

1580 1570 1580 1570 1580 1570 1580 1570

1575.50 1576.00 1576.50 1577.00 1577.50

162+00 RT. NEW 12" × 28' CSP (.064) W/ PRCCDI

1567.0

1569.99

Com Exc - 307 ✓

Com Exc - 430 SF ✓

161+55 LT. ~ 163+65 LT. NEW 6" × 210' UNDERDRAIN W/ FB @ 161+55 LT.

1614+50

1567.5

Com Exc - 359 SF ✓

1571.0 1570.5

T.G. 1575.5

INV 1568.8

1611+00

1568.0

1571.75

Com Exc 707 SF ✓

STONE TYPE III MOD = 60 ✓

161+00 RT. ~ 163+50 RT. NEW 6" × 250' UNDERDRAIN W/ FB @ 161+00 RT.

1607+50

1572.5

160+50 LT. ~ 161+50 LT. NEW 6" × 100' UNDERDRAIN W/ FB @ 160+50 LT.

Com Exc - 434 SF

1607+00

STONE TYPE III MOD = 170 ✓

DC 3-9-05

Begin Drilling + Blasting Solid Rock Subgrade 160+00

12" GRUBBING MATERIAL

R.B. 1-20-05 ✓

BANKING TRANSITION
Scale:
1" = 50' Horiz.
1" = 0.05' Vert.
D = 4°00', Lt.
BANK = 0.063 Ft/Ft.

STA 161+50 C.L.
NEW 18" X 80' PCC SP (.064) OR CMP (.060) OR RCP CLASS III OR CPEP (SL) W/ STONE FILL, TYPE I @ OUTLET

O.H.W. 1554.50

O.H.W. 1555.50

LT. EDGE
LT. SHLDR.
RT. EDGE & SHLDR.
LT. & RT. EDGE
LT. & RT. SHLDR.

Ledge
Boulders
Cobbles
Rock Cmpf.
Swamp
Marsh
Woods
Edge of Water
Riprap

K&E PLATE 3, CROSS SECTION
KEUFFEL & ESSER CO

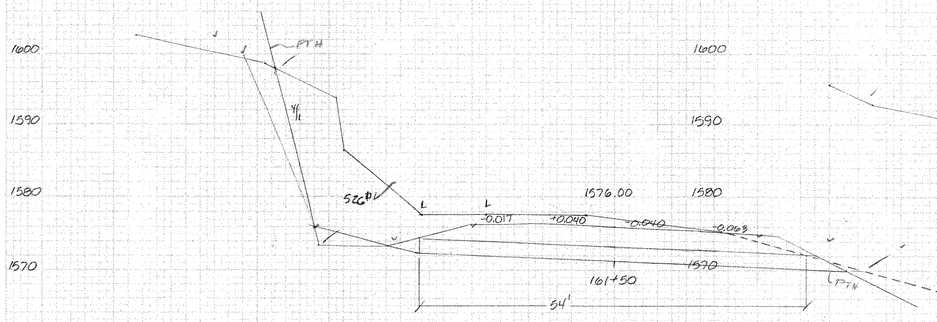

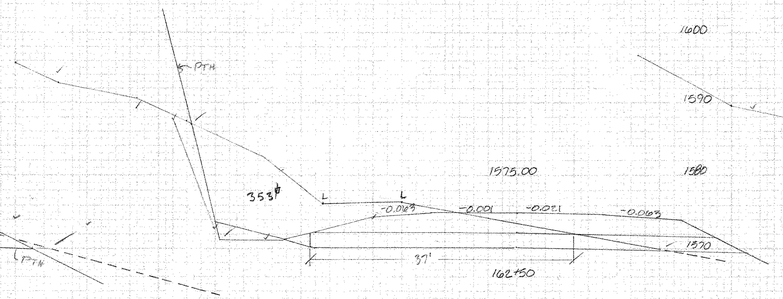

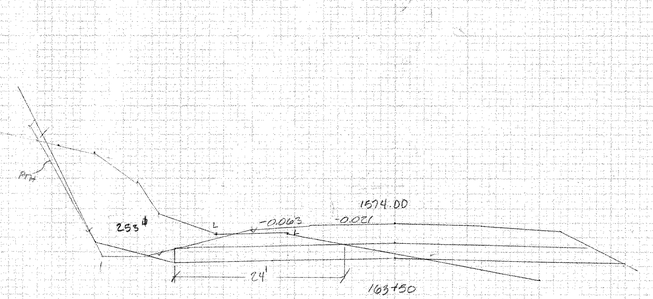

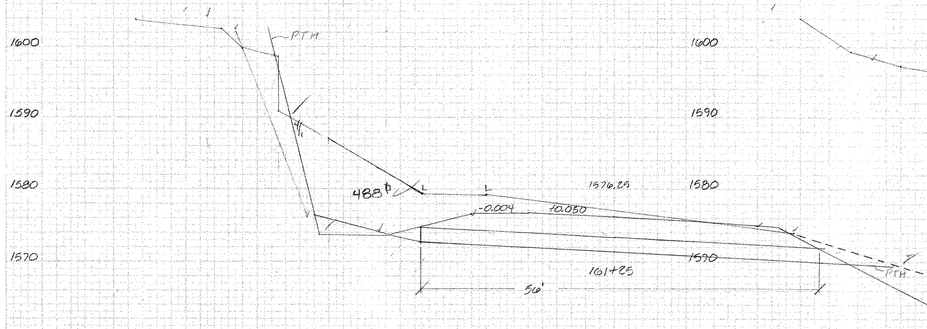

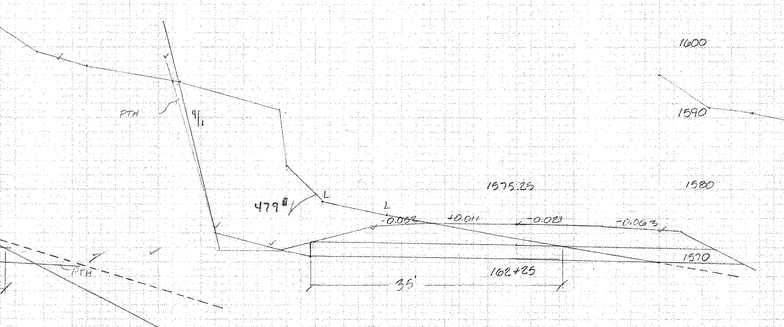

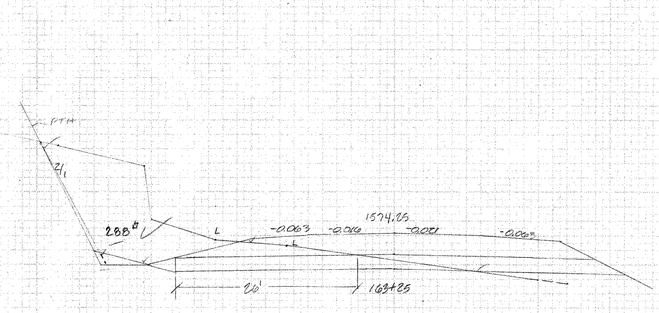

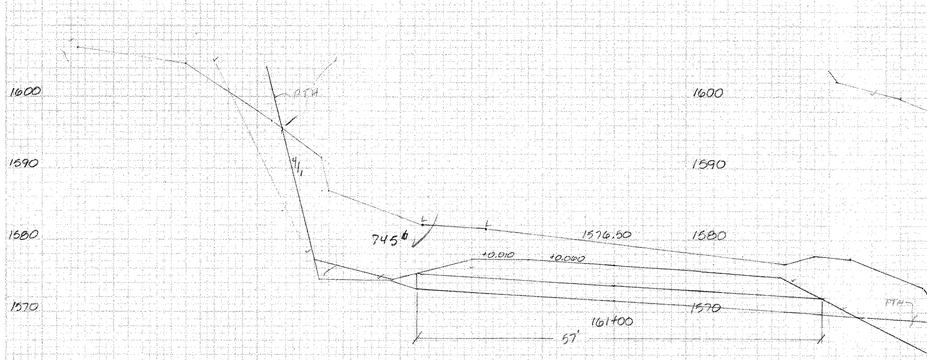

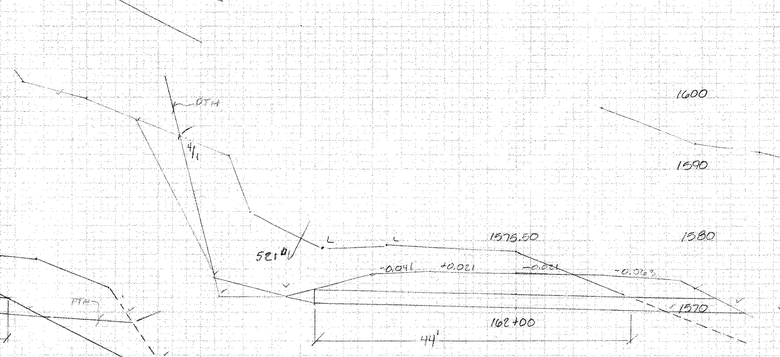

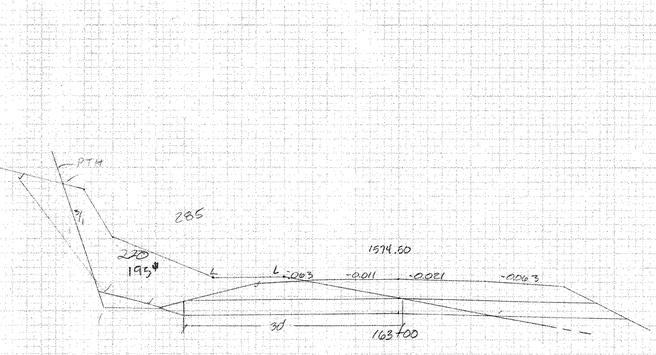

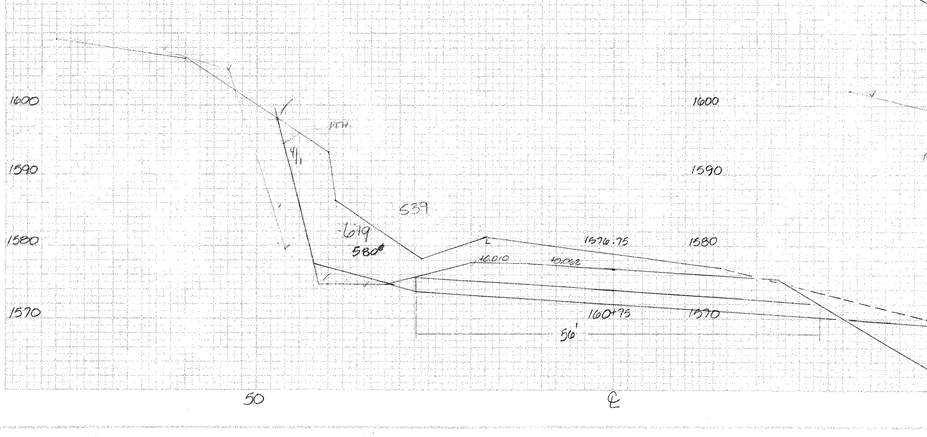

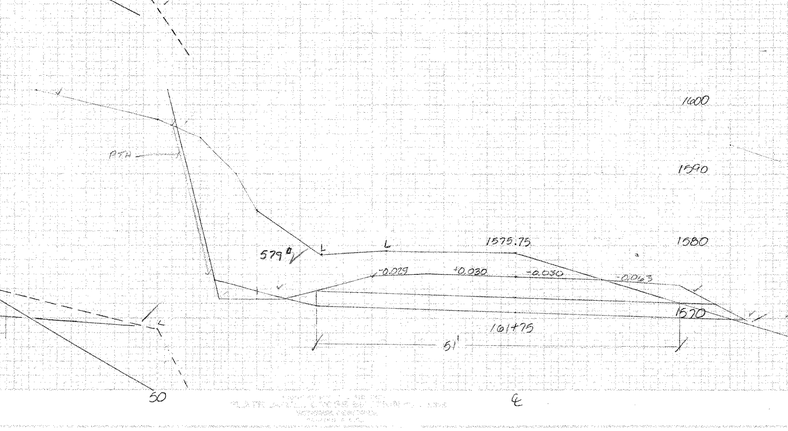

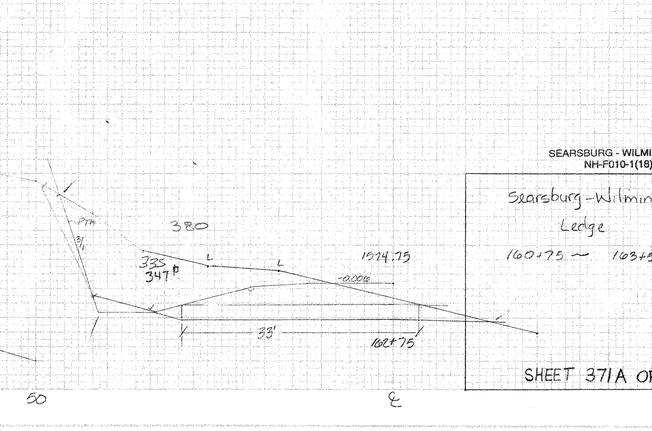

SEARSBURG - **WILMINGTON**
NH-F010-1(18)

Searsburg - Wilmington
Ledge
160+75 ~ 163+50

50 ℄ 50 ℄

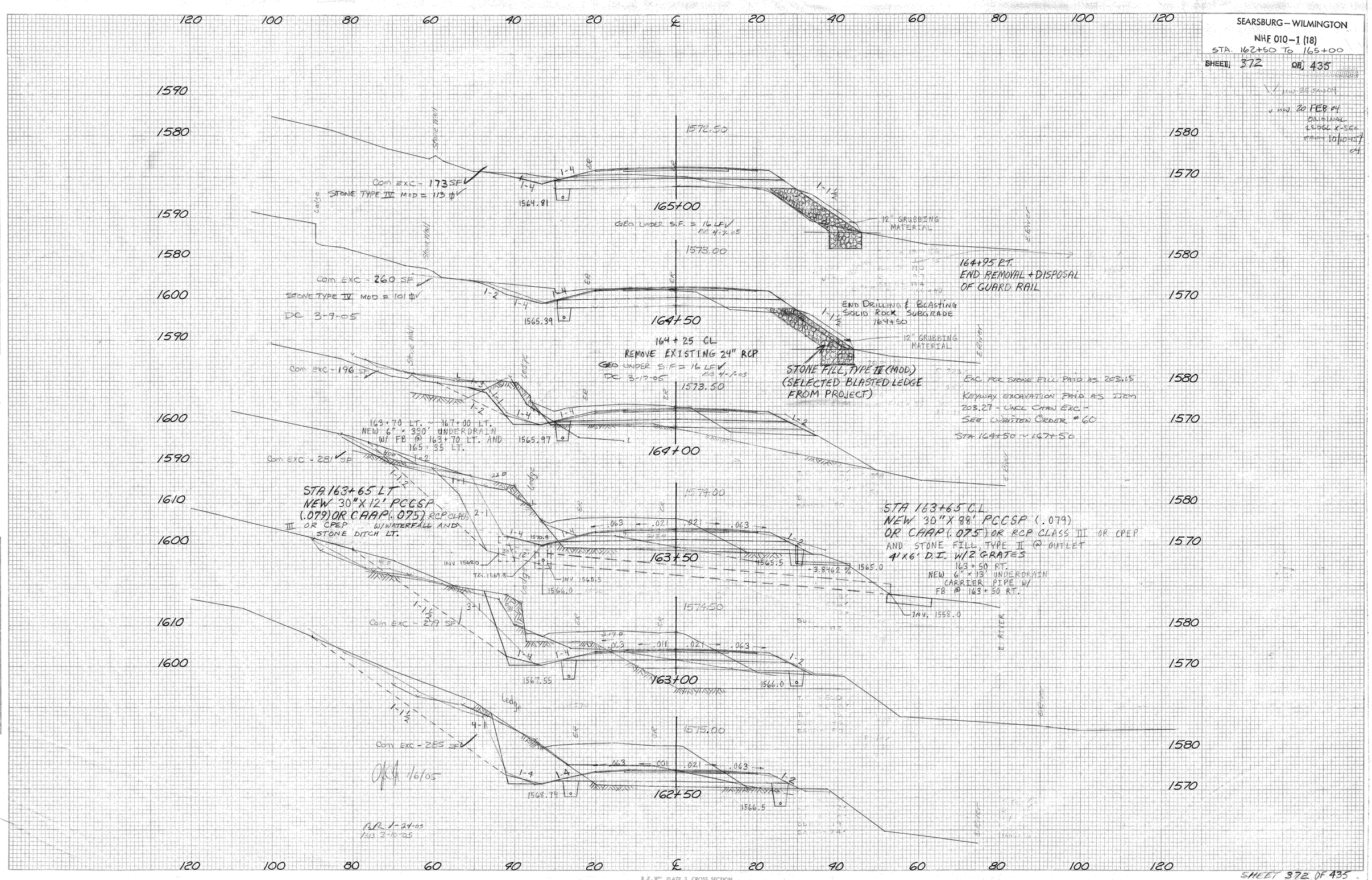
SEARSBURG – WILMINGTON
NHF 010-1 (18)
STA. 162+50 TO 165+00
SHEET 372 OF 435
MW 28 JAN 04
MW 20 FEB 04
ORIGINAL
2 DGL X-SEC
FROM 10/10-15/04
1572.50
165+00
Com EXC - 173 SF
STONE TYPE IV MOD = 113 ⌀
1564.81
GEO UNDER S.F. = 16 LF
BB 4-7-05
12" GRUBBING MATERIAL
164+95 RT.
END REMOVAL + DISPOSAL
OF GUARD RAIL
1573.00
164+50
Com EXC - 260 SF
STONE TYPE IV MOD = 101 ⌀
DC 3-9-05
1565.39
END DRILLING & BLASTING
SOLID ROCK SUBGRADE
164+50
164+25 CL
REMOVE EXISTING 24" RCP
GEO UNDER S.F. = 16 LF
DC 3-17-05
BB 4-7-05
STONE FILL, TYPE II (MOD.)
(SELECTED BLASTED LEDGE
FROM PROJECT)
EXC FOR STONE FILL PAID AS 203.18
KEYWAY EXCAVATION PAID AS ITEM
203.27 - UNCL CHAN EXC -
SEE WRITTEN ORDER # 60
STA 164+50 ~ 167+50
1573.50
164+00
Com EXC - 196 SF
163+70 LT. ~ 167+00 LT.
NEW 6" × 330' UNDERDRAIN
W/ FB @ 163+70 LT. AND
165+35 LT.
1565.97
Com EXC - 281 SF
STA 163+65 LT
NEW 30" X 12' PCCSP
(.079) OR CAAP (.075) RCP CLASS
III OR CPEP W/WATERFALL AND
STONE DITCH LT.
1574.00
163+50
STA 163+65 C.L.
NEW 30" X 88' PCCSP (.079)
OR CAAP (.075) OR RCP CLASS III OR CPEP
AND STONE FILL, TYPE II @ OUTLET
4'X6' D.I. W/2 GRATES
163+50 RT.
NEW 6" × 13' UNDERDRAIN
CARRIER PIPE W/
FB @ 163+50 RT.
INV. 1568.0
INV. 1565.5
1566.0
1565.5
-3.8462 %
1565.0
INV. 1558.0
1574.50
163+00
Com EXC - 279 SF
1567.55
1566.0
1575.00
162+50
Com EXC - 285 SF
1568.74
1566.5
1/6/05
BB 1-24-05
BB 2-10-05
E. RIVER
SHEET 372 OF 435
K+E PLATE 3, CROSS SECTION
KEUFFEL & ESSER CO.

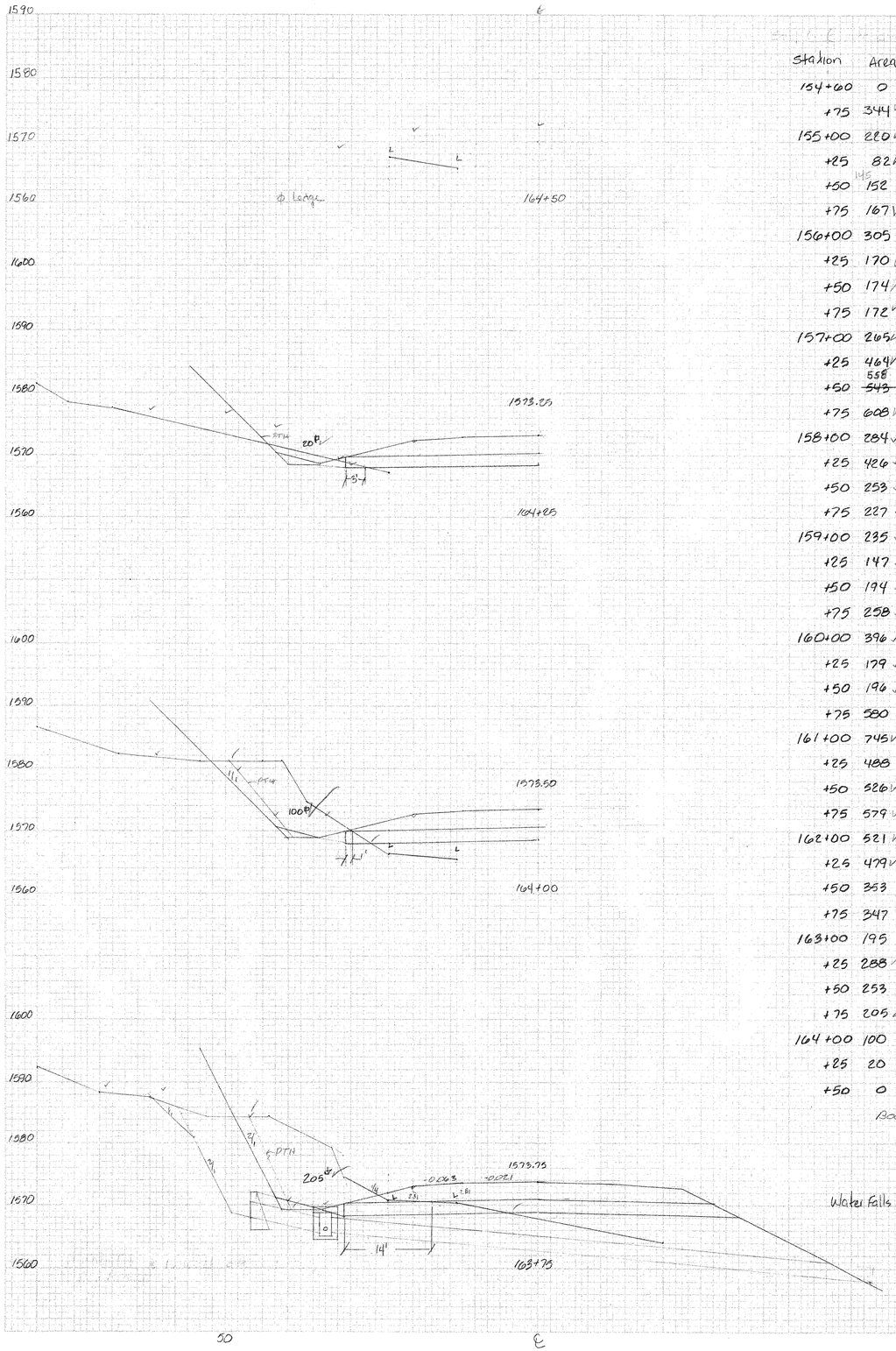

Station	Area sf	Dist ft	Solid Rock Exca Item 203.16 Volume(cy)	Drilling & Blasting ... subgrade Item 205.20 Width(ft)	Area (sy)
154+60	0				
+75	344	15	95.6	10 cutt	26.4
155+00	220	25	261.1	9	12.5
+25	82	25	139.8	ϕ	5.6
+50	145 152	25	108.3	4	18.1
+75	167	25	147.7	9	25.0
156+00	305	25	218.5	9	18.1
+25	170	25	219.9	4	15.3
+50	174	25	159.2	7	22.2
+75	172	25	160.2	9	26.4
157+00	265	25	202.3	10	34.7
+25	464	25	337.5	15	79.2
+50	~~543~~ 558	25	466.2	42	101.4
+75	608	25	532.9	31	90.3
158+00	284	25	505.6	34	59.7
+25	426	25	328.7	9	20.8
+50	253	25	314.4	6	12.5
+75	227	25	222.2	3	15.3
159+00	235	25	213.9	8	43.1
+25	147	25	176.9	23	69.4
+50	194	25	157.9	27	84.7
+75	258	25	209.3	34	95.8
160+00	396	25	302.8	35	83.3
+25	179	25	266.2	25	63.9
+50	196	25	173.6	21	106.9
+75	580	25	359.3	56	156.9
161+00	745	25	613.4	57	156.9
+25	488	25	570.8	56	152.8
+50	526	25	469.4	54	145.8
+75	579	25	511.6	51	~~44.0~~ 131.9
162+00	521	25	509.3	44	109.7
+25	479	25	463.0	35	100.0
+50	353	25	385.2	37	~~32.4~~ 97.2
+75	347	25	324.1	33	87.5
163+00	195	25	250.9	30	77.8
+25	288	25	223.6	26	69.4
+50	253	25	250.5	24	52.8
+75	205	25	212.0	14	20.8
164+00	100	25	141.2	1	5.6
+25	20	25	55.6	3 cutt	
+50	0	25	9.3		
			11,269.9 cy 12/11/03 CWG		~~2343.0~~ 2495.7 sy 12/11/03 CWG

Book 1 PAGE 71

Book 1A PAGE 59

ABC 4/25/04

M.W.T. 5/10/04

Water Falls @ 163+65 Lt additional – Field Measured by CWG 4/24/03

$\frac{16+23}{2} \times 12 \times \frac{10+12}{2} \times \frac{1}{27} = 95.3$ cy CWG

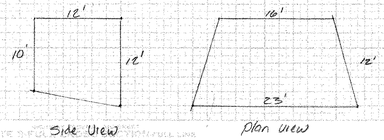

Side View

Plan View

SEARSBURG - WILMINGTON
NH-F010-1(18)

Searsburg-Wilmington Ledge
163+75 ~ 164+25

SHEET 372A OF 435

SEARSBURG - WILMINGTON
NHF 010-1(18)

1/ MW 28 JAN 04



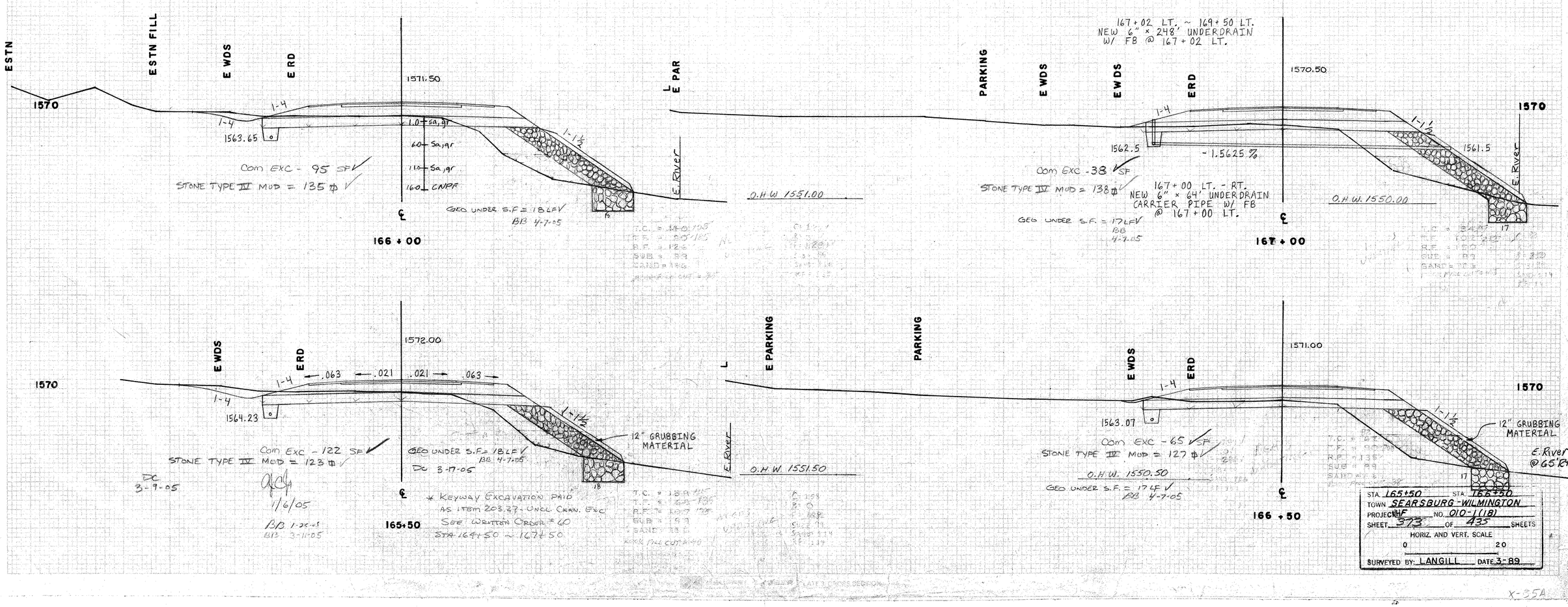

STA. 165+50 STA. 166+50
TOWN SEARSBURG-WILMINGTON
PROJECT NHF NO. 010-1(18)
SHEET 373 OF 435 SHEETS
HORIZ. AND VERT. SCALE
0 20
SURVEYED BY: LANGILL DATE 3-89

X-55A

SEARSBURG - WILMINGTON
NHF 010 - 1(18)

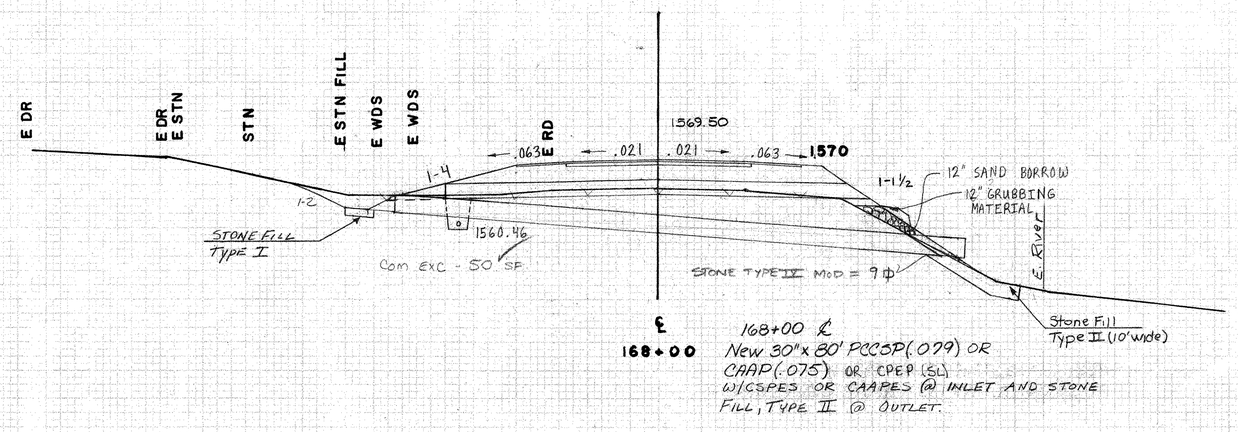

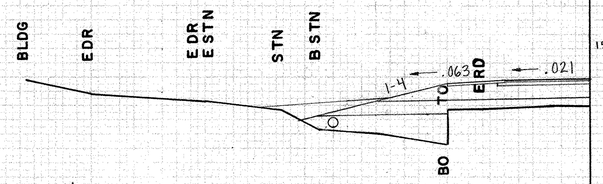

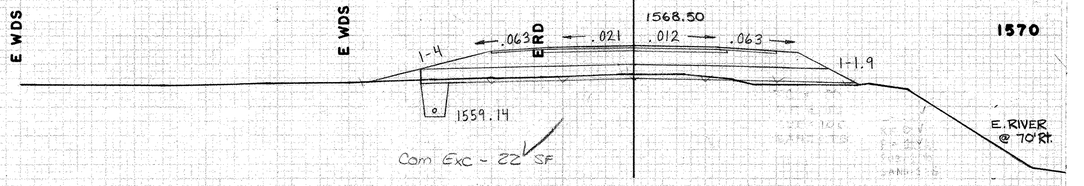

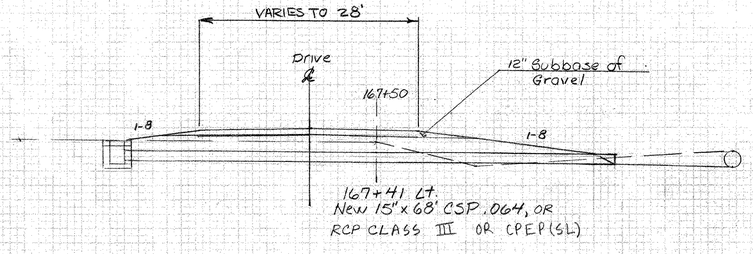

Sta. 168+50 to Sta. 171+00
Where Necessary Side Slope Rates Should Be Modified To Catch Top Of Existing Bank To Avoid Encroachment Into The Deerfield River And Damage To Existing Vegetation.

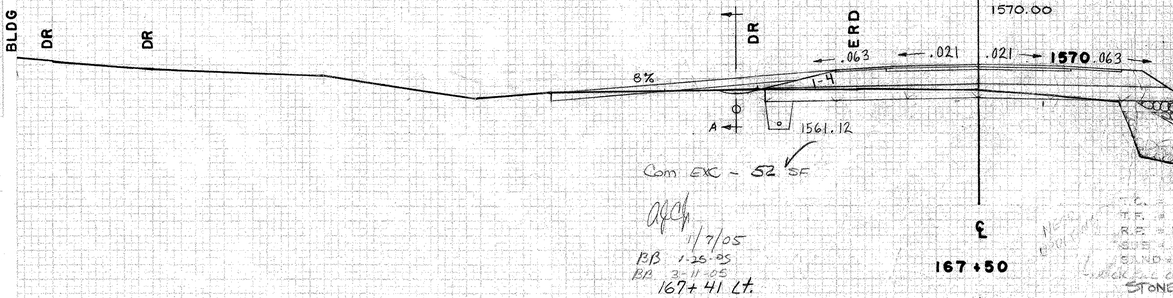

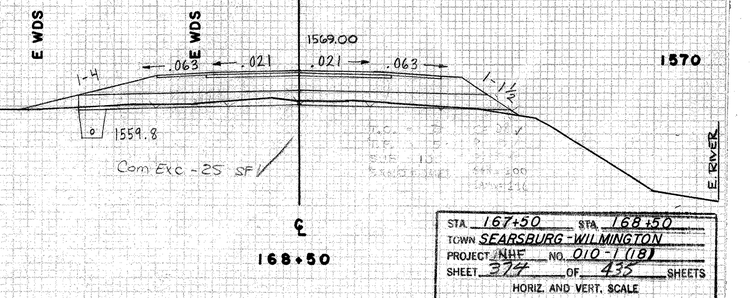

STA. 167+50 STA. 168+50
TOWN SEARSBURG - WILMINGTON
PROJECT NHF NO. 010-1(18)
SHEET 374 OF 433 SHEETS
HORIZ. AND VERT. SCALE
0 20
SURVEYED BY: LANGILL DATE 3-89

X2.5-18

SEARSBURG – WILMINGTON
NHF 010-1 (18)
STA. 168+50 To 171+00
SHEET 375 OF 435

120 100 80 60 40 20 ℄ 20 40 60 80 100 120

1570 / 1560

1566.40
.063 .058 .058 .010 .063
1-4 1-4
1555.8
Com Exc - 89 SF
171+00

Sta. 168+50± to Sta. 171+00±
Where necessary side slope rates should be modified to catch top of existing bank to avoid encroachment into the Deerfield River and damage to existing vegetation.

1566.97
.063 .058 .038 .024
1-4 1-4
1556.46
Com Exc - 29 SF
170+50

170+80 Rt:
End Manufactured Terminal Section - Flared
Begin Turnout Construction
(Top Surface of Turnout
Shall be 3" Subbase of
Crushed Gravel (Fine Graded))

Sta. 169+92, Lt.
Construct Type A-1 (Gravel)
Drive - 16' wide

1570 / 1560

16
1-8 1-8
-3%
-8.5%
DRIVEWAY SECTION
169+92, 40' Lt.

1567.50
.063 .021 .018 .046
1-4 1-3.5
1557.12
Com Exc - 38 SF
170+00

169+52 Lt. ~ 173+50 Lt.
New 6" x 398' underdrain w/
FB @ 169+52 Lt. and 171+50 Lt.

1568.00
.063 .021 .002 .063
1-4 1-3
1558.5
1557.5
-1.2396 %
169+50
Com Exc - 26 SF

169+50 Lt. - Rt.
New 6" x 9' underdrain
carrier pipe w/ FB
@ 169+50 Lt.

0.Cfs 1/7/05
1.0 1/7/05

1570 / 1560

Rt. Edge
Rt. Shldr.
℄
Rt. Shldr.
Lt. & Rt. Edge - 0.021
Lt. & Rt. Shldr. - 0.063
Lt. Shldr. - 0.047
Lt. Edge & Shldr
-0.021
168+50 169+69 170+27 171+27
168 169 170 171 172
Banking Transition
Scale:
1" = 50' Horiz.
1" = 10' Vert.
D = 5°00.6'
Bank = 0.021 ft/ft

169+00
See Sht 374 for Revised
x Section @ 169+00

168+50
See Sht 374 for Revised
x Section @ 168+50

Sta. 168+50± to Sta. 171+00±
Where necessary side slope rates should be modified to catch top of existing bank to avoid encroachment into the Deerfield River and damage to existing vegetation.

STA. 171+50
Turnout Area
STA. 171+00±
STA 170+80 4' 4.5'
STA. 170+50
STA 170+42.5
Line of Normal Shoulder
Pay Limit for Steel Beam Guard Rail
Pay Limit for N.T.S. Flared End Section
37'-6"
STA. 170+00
STA 169+75
10' 0 0 10'
SCALE

120 100 80 60 40 20 ℄ 20 40 60 80 100 120

K&E PLATE 3. CROSS SECTION
DEUFFEL & ESSER CO

FINAL SURVEY — NOTE BOOK — NO. — SURVEYED — PLOTTED — TEMPLATE — AREAS — AREAS CHECKED — BY — DATE

ORIGINAL SURVEY — NOTE BOOK — NO. — SURVEYED — PLOTTED — TEMPLATE — AREAS — AREAS CHECKED — BY — DATE — 1-24 — QUERY

SEARSBURG – WILMINGTON
NHE 010–1 (18)
STA. 171+50 TO 174+50
SHEET 376 OF 435

120 100 80 60 40 20 ℄ 20 40 60 80 100 120

1560 1550

1560.97
1-4
1-4
1550.89
Com Exc – 116 SF
174+50
6" CMP

1561.90
ER
ER
1-4
1-3.5
1551.46
Com Exc – 90 SF
174+00
Sta. 174+00, Rt.
Remove Existing 15" RCP
15" RCP

173+52 LT. – 177+50 LT.
NEW 6" × 398' UNDERDRAIN
W/ FB @ 173+52 LT. AND
175+50 LT.

1562.77
ER
ER
ER
1-4
1-2
1552.5
Com Exc – 55 SF
173+50
-0.9901 %
1551.5
6" CMP

173+50 LT. – RT.
NEW 6" × 101' UNDERDRAIN
CARRIER PIPE W/ FB @
173+50 LT.

1570 1560 1550

1563.60
1-4
1-3.5
INV. 1554.5
1553.16
Com Exc – 39 SF
173+00
INV. 1553.0
18" CMP

173+00 C.L.
NEW 18"×116' PCCSP (.064) OR CAAP (.060) OR RCP CLASS III OR
CREP (SL) W/CSPES OR CAAPES @ INLET W/ STONE
FULL, TYPE E @ OUTLET

1564.37
1-4
1553.82
Com Exc – 18 SF
172+50

172+12 LT.
CONSTRUCT TYPE A-1 DRIVE
(GRAVEL ~ 20' WIDE)

1570 1560 1550

20
1-8
1-6
DRIVEWAY SECTION
172+12, 40' LT.
15"×52' ACCSMP
(.064")

1565.10
ER
ER
-7.7%
3%
1-4
Com Exc – 44 SF
1554.18
172+00
18" CMP

STA 172+12 LT.
NEW 15"×52' CSPC(.064)
OR RCP CLASS III OR CREP W/ CSPES
@ INLET & OUTLET

171+70 C.L.
REMOVE EXISTING 18" RCP

1565.78
.071
.071
.040
.043
1-3.5
1-4
Com Exc – 29 SF
1555.14
171+50
171 SF

120 100 80 60 40 20 ℄ 20 40 60 80 100 120

K&E PLATE 3, CROSS SECTION
KEUFFEL & ESSER CO.

SHEET 376 OF 435

DATE
BY
SURVEYED
PLOTTED
TEMPLATE
NOTE BOOK
AREAS CHECKED
NO.
FINAL SURVEY

DATE 1-84
BY GKM / JBS
SURVEYED
PLOTTED
TEMPLATE
NOTE BOOK
AREAS CHECKED
NO.
ORIGINAL SURVEY

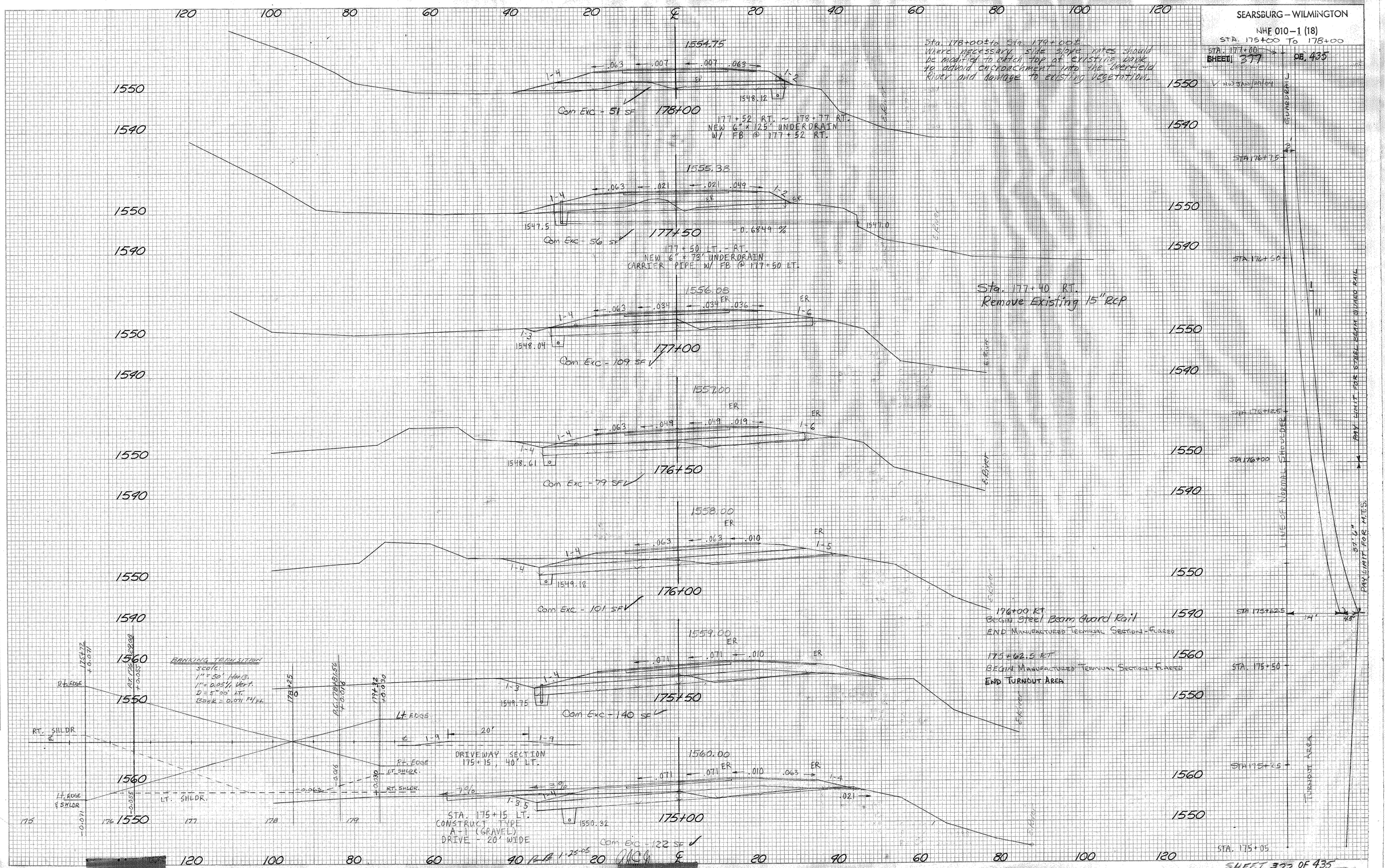
SEARSBURG – WILMINGTON
NHF 010-1 (18)
STA. 175+00 To 178+00
SHEET 377 OF 435
Sta. 178+00± to Sta. 179+00±
Where necessary side slope rates should be modified to catch top of existing bank to advoid encroachment into the Deerfield River and damage to existing vegetation.
1554.75
Com Exc - 51 SF
178+00
177+52 RT. ~ 178+77 RT.
NEW 6" x 125' UNDERDRAIN
W/ FB @ 177+52 RT.
1555.38
Com Exc - 56 SF
177+50
-0.6849 %
177+50 LT. - RT.
NEW 6" x 73' UNDERDRAIN
CARRIER PIPE W/ FB @ 177+50 LT.
1556.08
Com Exc - 109 SF
177+00
Sta. 177+40 RT.
Remove Existing 15" RCP
1557.00
Com Exc - 79 SF
176+50
1558.00
Com Exc - 101 SF
176+00
176+00 RT.
Begin Steel Beam Guard Rail
End Manufactured Terminal Section - Flared
1559.00
Com Exc - 140 SF
175+50
175+62.5 RT
Begin Manufactured Terminal Section - Flared
End Turnout Area
1560.00
Com Exc - 122 SF
175+00
BANKING TRANSITION
scale:
1" = 50' Horiz.
1" = 0.05'/' Vert.
D = 5°00' LT.
Bank = 0.071 Ft/Ft.
DRIVEWAY SECTION
175+15, 40' LT.
STA. 175+15 LT.
CONSTRUCT TYPE
A-1 (GRAVEL)
DRIVE - 20' WIDE
RT. SHLDR
LT. SHLDR.
Rt. EDGE
Lt. EDGE
Lt. EDGE & SHLDR
GUARDRAIL
LINE OF NORMAL SHOULDER
PAY LIMIT FOR STEEL BEAM GUARD RAIL
PAY LIMIT FOR M.T.S.
TURNOUT AREA
STA. 176+75
STA. 176+50
STA. 176+12.5
STA. 176+00
STA. 175+62.5
STA. 175+50
STA. 175+25
STA. 175+05
SHEET 377 OF 435

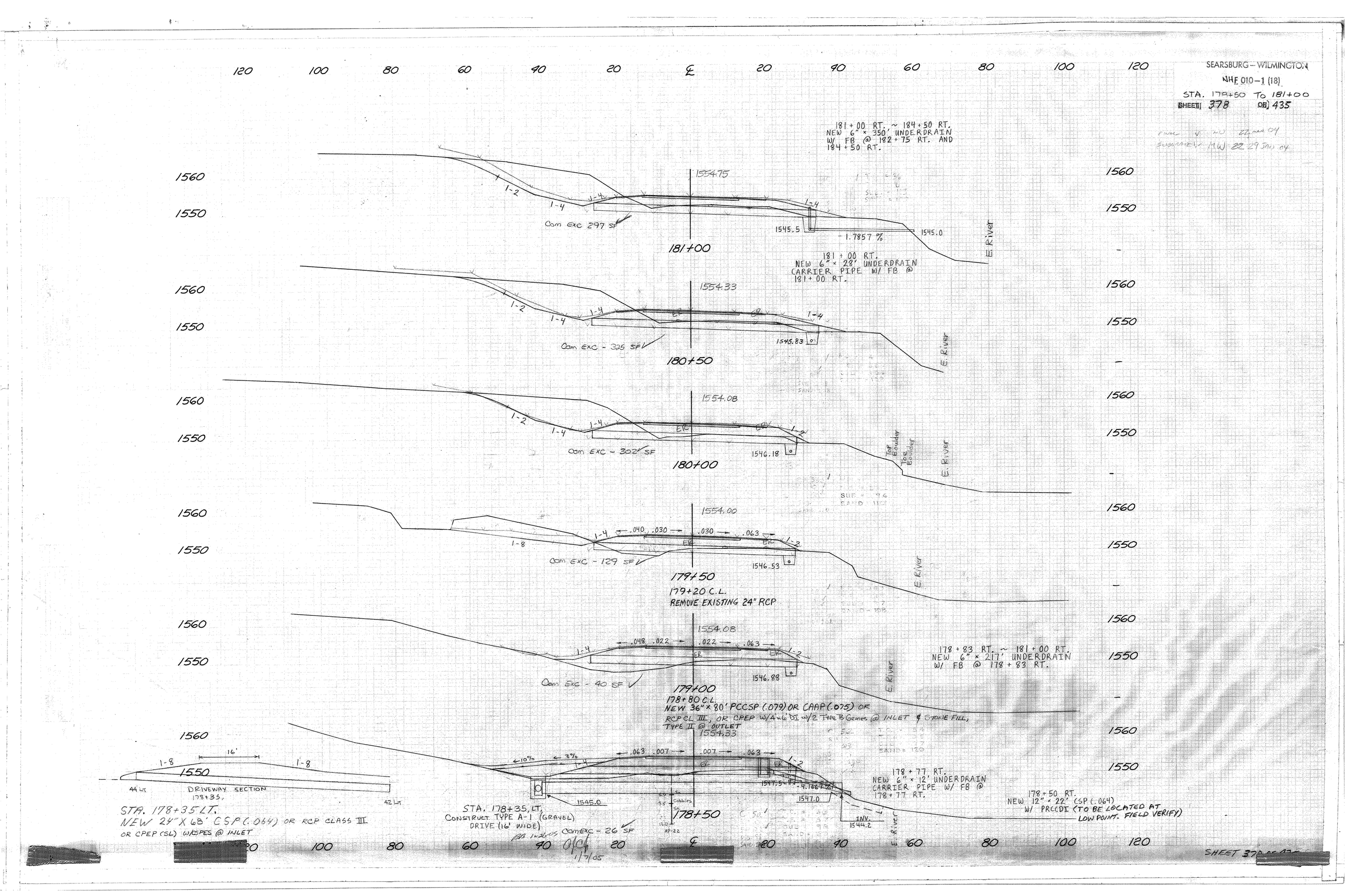
SEARSBURG – WILMINGTON
NHF 010-1 (18)
STA. 179+50 To 181+00
SHEET 378 OF 435
181+00 RT. ~ 184+50 RT.
NEW 6" × 350' UNDERDRAIN
W/ FB @ 182+75 RT. AND
184+50 RT.
1554.75
1-2
1-4
Com EXC 297 SF
1545.5
-1.7857 %
1545.0
181+00
E. River
181+00 RT.
NEW 6" × 28' UNDERDRAIN
CARRIER PIPE W/ FB @
181+00 RT.
1554.33
Com EXC - 325 SF
1545.83
180+50
1554.08
Com EXC - 302 SF
1546.18
180+00
Top Boulder
Toe Boulder
1554.00
.040
.030
.063
1-8
Com EXC - 129 SF
1546.53
179+50
179+20 C.L.
REMOVE EXISTING 24" RCP
1554.08
.048
.022
.063
Com EXC - 40 SF
1546.88
179+00
178+80 C.L.
NEW 36" × 80' PCCSP (.079) OR CAAP (.075) OR
RCP CL III, OR CPEP W/ 4'×6' DI W/ 2 TYPE B Grates @ INLET & STONE FILL,
TYPE II @ OUTLET
178+83 RT. ~ 181+00 RT.
NEW 6" × 217' UNDERDRAIN
W/ FB @ 178+83 RT.
1554.33
.063
.007
.007
.063
10%
3%
1545.0
1547.5
1547.0
178+50
178+77 RT.
NEW 6" × 12' UNDERDRAIN
CARRIER PIPE W/ FB @
178+77 RT.
INV.
1544.2
178+50 RT.
NEW 12" × 22' CSP (.064)
W/ PRCCDI (TO BE LOCATED AT
LOW POINT. FIELD VERIFY)
16'
1-8
1550
44 LT
DRIVEWAY SECTION
178+35
42 LT
STA. 178+35 LT.
NEW 24" X 68' CSP (.064) OR RCP CLASS III
OR CPEP (SL) W/ SPES @ INLET
STA. 178+35, LT.
CONSTRUCT TYPE A-1 (GRAVEL)
DRIVE (16' WIDE)
Com EXC - 26 SF
1/7/05
SHEET 378 OF 435

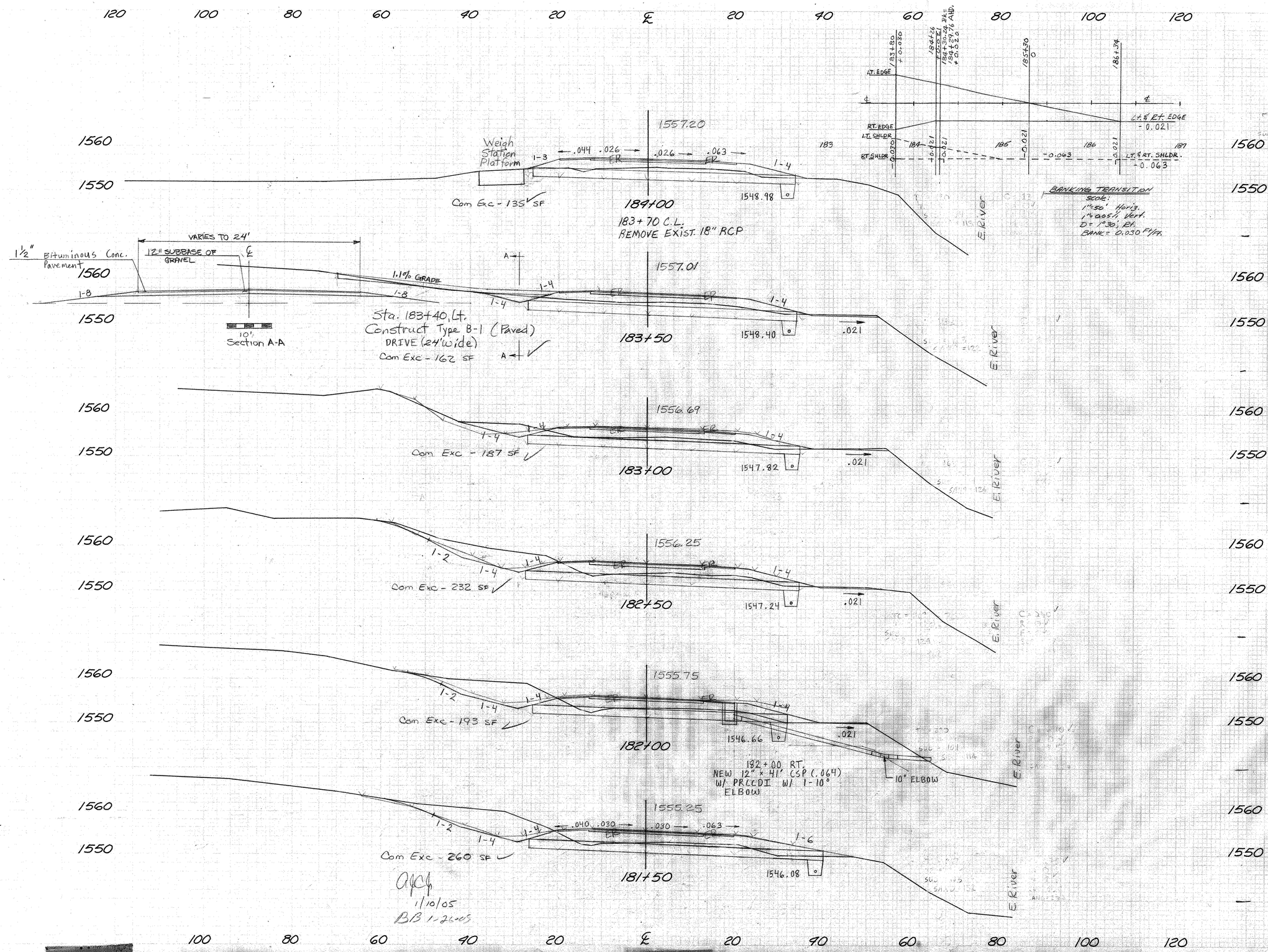
Weigh Station Platform
1557.20
Com Exc - 135 SF
184+00
183+70 C.L.
REMOVE EXIST. 18" RCP
1548.98
1½" Bituminous Conc. Pavement
VARIES TO 24'
12" SUBBASE OF GRAVEL
1.1% GRADE
1557.01
Sta. 183+40, Lt.
Construct Type B-1 (Paved)
DRIVE (24' wide)
Com Exc - 162 SF
10' Section A-A
183+50
1548.40
1556.69
Com Exc - 187 SF
183+00
1547.82
1556.25
Com Exc - 232 SF
182+50
1547.24
1555.75
Com Exc - 193 SF
182+00
1546.66
182+00 RT.
NEW 12" x 41' CSP (.064)
W/ PRCCDI W/ 1-10° ELBOW
10° ELBOW
1555.25
Com Exc - 260 SF
181+50
1546.08
E. River
LT. EDGE
RT. EDGE
LT. SHLDR
RT. SHLDR
Lt. & Rt. EDGE -0.021
LT. & RT. SHLDR. -0.063
BANKING TRANSITION
Scale:
1"=50' Horiz.
1"=0.05' Vert.
D = 1°30', Rt.
BANK = 0.030 Ft/Ft.
1/10/05
BB 1-26-05

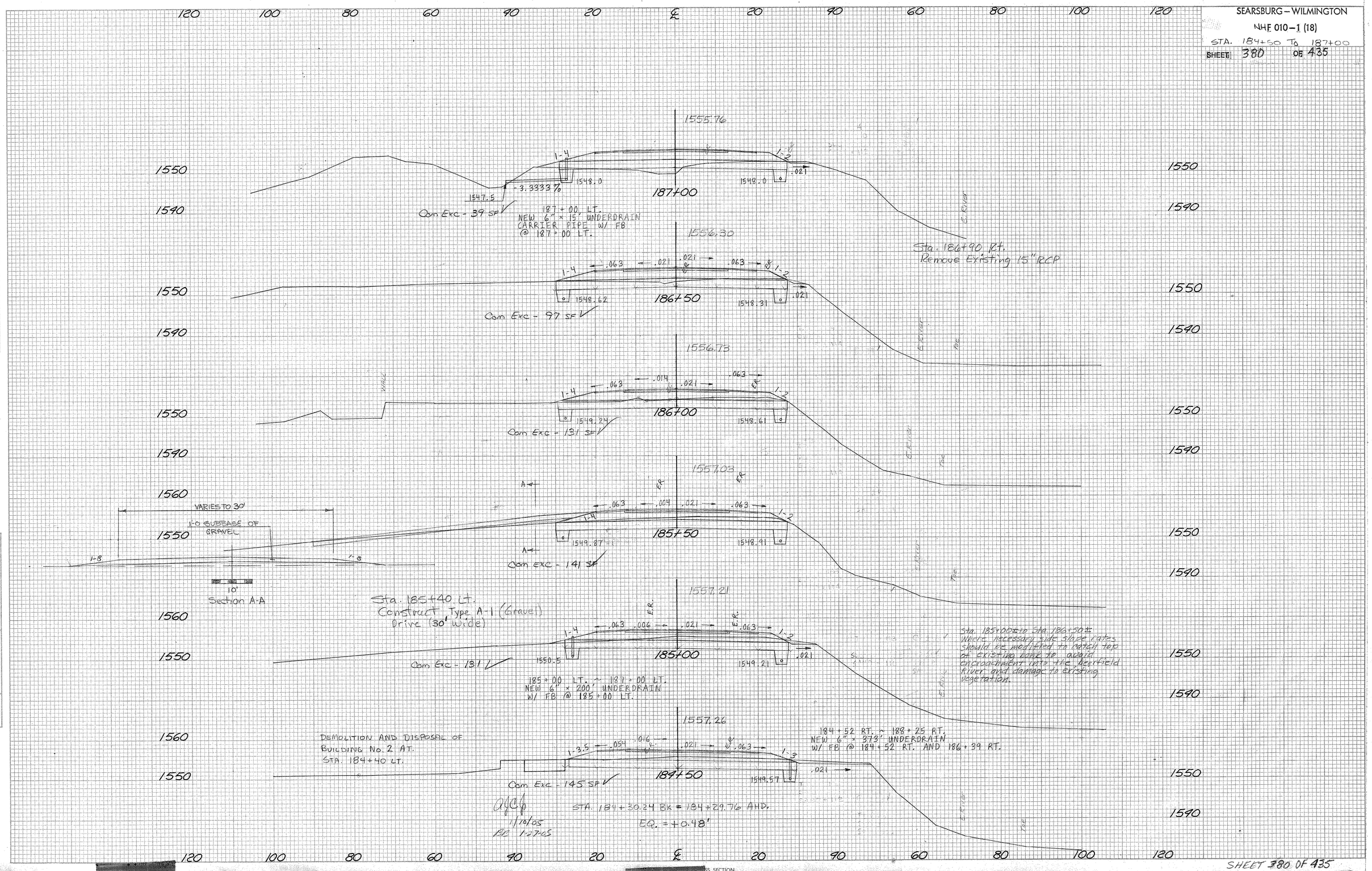
SEARSBURG – WILMINGTON
NHF 010-1 (18)
STA. 184+50 TO 187+00
SHEET 380 OF 435
1555.76
187+00
1547.5
-3.3333%
1548.0
1548.0
.021
Com Exc - 39 SF
187+00 LT.
NEW 6" × 15' UNDERDRAIN
CARRIER PIPE W/ FB
@ 187+00 LT.
Sta. 186+90 Rt.
Remove Existing 15" RCP
1556.30
186+50
1548.62
1548.31
.063
.021
Com Exc - 97 SF
1556.73
186+00
1549.24
1548.61
.014
Com Exc - 131 SF
1557.03
185+50
1549.87
1548.91
.004
Com Exc - 141 SF
VARIES TO 30'
1'-0 SUBBASE OF GRAVEL
1-8
10'
Section A-A
Sta. 185+40 Lt.
Construct Type A-1 (Gravel)
Drive (30' Wide)
1557.21
185+00
1550.5
1549.21
.006
Com Exc - 131
185+00 LT. ~ 187+00 LT.
NEW 6" × 200' UNDERDRAIN
W/ FB @ 185+00 LT.
Sta. 185+00± to Sta. 186+50±
Where necessary side slope rates should be modified to catch top of existing bank to avoid encroachment into the Deerfield River and damage to existing vegetation.
1557.26
184+50
1549.57
.054
.016
Com Exc - 145 SF
DEMOLITION AND DISPOSAL OF
BUILDING No. 2 AT.
STA. 184+40 LT.
184+52 RT. ~ 188+25 RT.
NEW 6" × 373' UNDERDRAIN
W/ FB @ 184+52 RT. AND 186+39 RT.
STA. 184+30.24 BK = 184+29.76 AHD.
EQ. = +0.48'
1/10/05
1-27-05
SHEET 380 OF 435

SEARSBURG – WILMINGTON
NHF 010-1 (18)
STA. 187+50 TO 190+00
SHEET 381 OF 435

FINAL SURVEY
SURVEYED
PLOTTED
TEMPLATE
AREAS
AREAS CHECKED
NOTE BOOK
NO.

BY	DATE

SEARSBURG – WILMINGTON
NHE 010-1 (18)
STA. 190+60 To 193+00
SHEET 382 OF 435
FINAL V MOD 3/22/04

160 140 120 100 80 60 40 20 0 20 40 60 80 100 120

1550 / 1540 / 1530

1544.55

1-4 1-4 6.8

1536.09

Com Exc - 0 SF

193+00

.021 Not Removed

E. EXIST.

STA 192+45, Lt. (Skewed)
Construct Type A-1 (Gravel)
Drive - 12 wide

1545.53

1-8 12' 1-8 5% 3% 1-4

1537.11

Com Exc - 28 SF

192+50

1/2"/Ft FROM END SECTION

DRIVEWAY SECTION
192+45, 45' LT.

.021 Not Removed

192+06 LT. ~ 195+01 LT.
NEW 6" x 295' UNDERDRAIN
W/ FB @ 192+06 LT. AND
193+54 LT.

1546.51

1-4 1-4 Topsoil

1538.0

INV. 1539.0

Com Exc - 15 SF

192+02 C.L.
NEW 18"x100' PGCSP(.064)
OR CAAP(.060), RCP CL III,
CPEP(SL) W/CSPES OR CAAPES @
INLET & DITCH W/STONE FILL TYPE I
@ OUTLET.

192+00

7:1 SLOPE AP-23 7:1 SLOPE

1547.49

CARRIER PIPE OCCURS @ 192+04 LT. - RT.

192+04 LT. - RT.
NEW 6" x 90' UNDERDRAIN
CARRIER PIPE W/ FB @
192+04 LT.

INV. 1537.3

1/2"/Ft. 1/2"/Ft.

STONE FILL, TYPE I
8'W x 7'L x 1'D

outlet Ditch
1-4 Slopes

A-A

STA. 192+00 RT
END TURNOUT CONSTRUCTION.

1-4 1-4

1539.16

Com Exc - 10 SF

191+50

.063 1-4 1-4 .021 Not Removed

E. EXIST.

1548.47

1-4

1540.23

Com Exc - 19 SF

191+00

.021 Not Removed

E. EXIST.

1544.45

.063 .039 .038 .032 .063 1-4

1541.29

Com Exc - 18 SF

190+50

.021 NOT Removed

E. EXIST.

STA. 190+43 RT.
REMOVE EXISTING 15" RCP.

1/10/05
1/27/05

ORIGINAL SURVEY
NOTE BOOK
NO.
SURVEYED
PLOTTED
TEMPLATE
AREAS
AREAS CHECKED
BY
DATE

FINAL SURVEY
NOTE BOOK
NO.
SURVEYED
PLOTTED
TEMPLATE
AREAS
AREAS CHECKED
BY
DATE
RJC
1/27/05

CROSS SECTION
KIEFEL & ESSER CO

SHEET 382 OF 435

SEARSBURG – WILMINGTON
NHF 010–1 (18)
STA. 193+50 TO 196+00
SHEET 383 OF 435

120 100 80 60 40 20 ℄ 20 40 60 80 100 120

1538.69
1540
1530
ER
.063 .021 .004 .063
1-4
1530.60
1-4
196+00
Com Exc – 20 SF
E.C.L.

1539.65
1540
1530
16'
1-8
1-8
DRIVEWAY SECTION
195+42, 40' LT.
10%
3%
1=4
.063 .021 .017 .053
1531.32
1-4
195+50
Com Exc – 0 SF
E.C.L.

STA 195+42 LT.
CONSTRUCT TYPE A-1 (GRAVEL)
DRIVE (16' WIDE)

195+03 LT. – 198+50 LT.
NEW 6" x 347' UNDERDRAIN
W/ FB @ 195+03 LT. AND
196+77 LT.

1540.63
1540
1530
.063 .030 .030 .040
1-4
1-4
INV. 1534.1
1532.0
-1.2222 %
CARRIER PIPE
OCCURS @ 195+01 LT. - RT.
INV. 1530.9
195+00
Com Exc – 0 SF
E.C.L.

STA 195+00 C.L.
NEW 18"X96' PCCSP(.064)OR
CAAP(.060) OR RCP CL III OR CPEP(SL) W/CSPES
OR CAAPES @ INLET AND STONE FILL, TYPE I
@ OUTLET

195+01 LT. - RT.
NEW 6" x 90' UNDERDRAIN
CARRIER PIPE W/ FB @ 195+01 LT.

1541.61
1540
1530
ER
ER
1-4
1-4
1-3
1533.03
E.C.L.
194+50
Com Exc – 56 SF

194+33 RT.
REMOVE EXIST. 18" RCP

1542.59
1540
1530
ER
ER
1-4
1-4
1534.05
194+00
Com Exc – 0 SF

1543.57
1540
1530
ER
.063 .038 .038 .032
1-4
1-4
ER
.021
1535.07
193+50
Com Exc – 7 SF

194+17
194+67 +0.038
RT. 195+16.67 -0.042
193+67 +0.021
R± EDGE
℄
194+17
0
197+17
℄
LT. ±RT. EDGE -0.021
LT. SHLDR L.F. EDGE
LT. SHLDR -0.063
-0.042
-0.021
-0.021
-0.021
-0.021
LT. SHLDR ± RT. SHLDR -0.063
195
196
197

BANKING TRANSITION
SCALE:
1"=50' HOR'Z.
1"=0.05' VERT.
D= 2°00' CT.
BANK = 0.038 FT/FT.

12B 1-17-05

SHEET 383 OF 435

ORIGINAL SURVEY
NOTE BOOK
NO.
SURVEYED
PLOTTED
TEMPLATE
AREAS
AREAS CHECKED
BY
DATE

SEARSBURG – WILMINGTON

NH F 010-1 (18)

STA. 196+50 TO 199+00

SHEET 384 OF 435

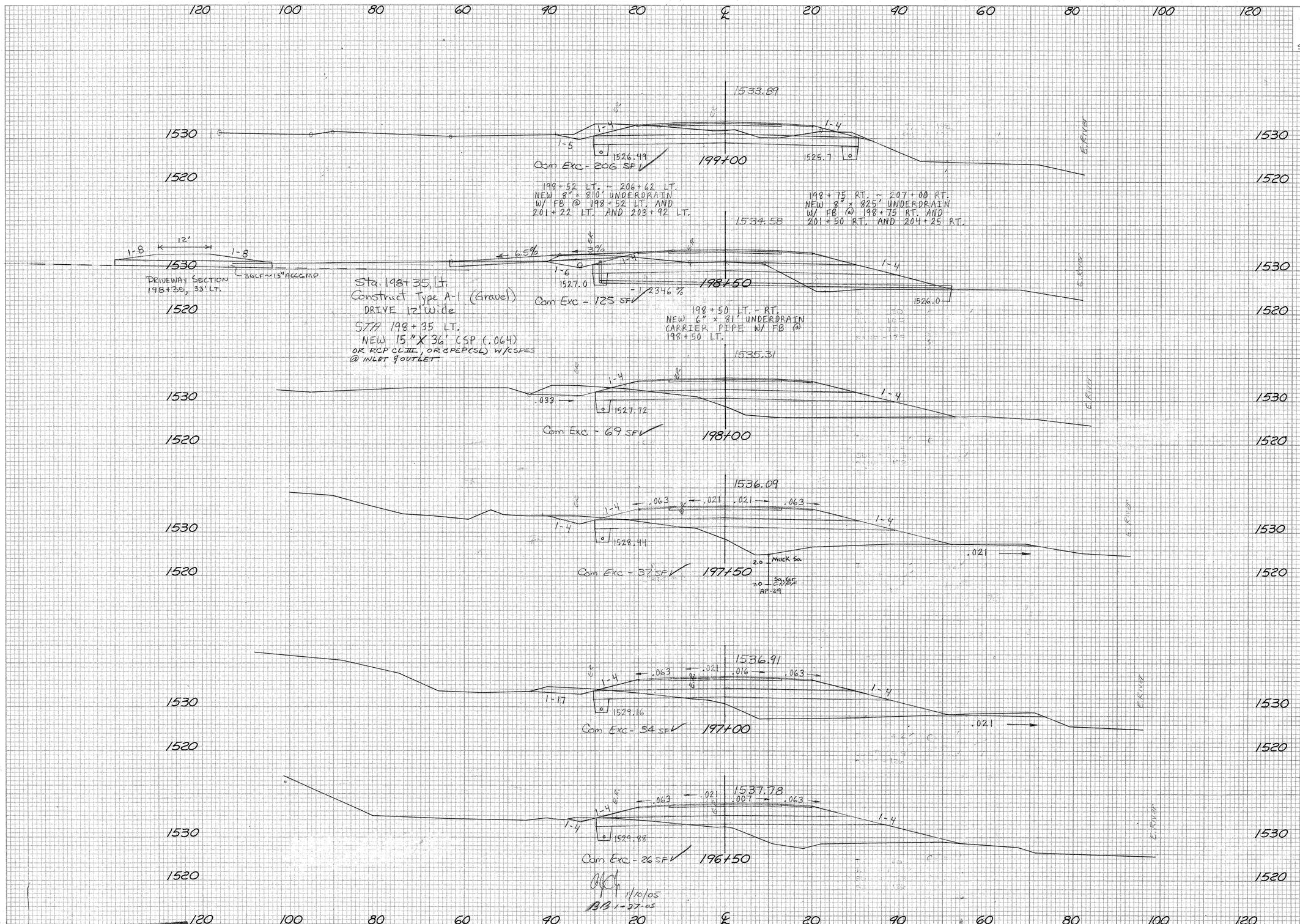

1/10/05

BB 1-27-05

FINAL SURVEY — NOTE BOOK — NO. — SURVEYED — PLOTTED — TEMPLATE — AREAS — AREAS CHECKED — BY — DATE

ORIGINAL SURVEY — NOTE BOOK — NO. — SURVEYED — PLOTTED — TEMPLATE — AREAS — AREAS CHECKED — BY — DATE

RAL v wam 1/84

SECTION & ESSER CO.

SHEET 384 OF 435

SEARSBURG – WILMINGTON

NH F 010–1 (18)

STA. 199+50 TO 202+00

SHEET 385 OF 435

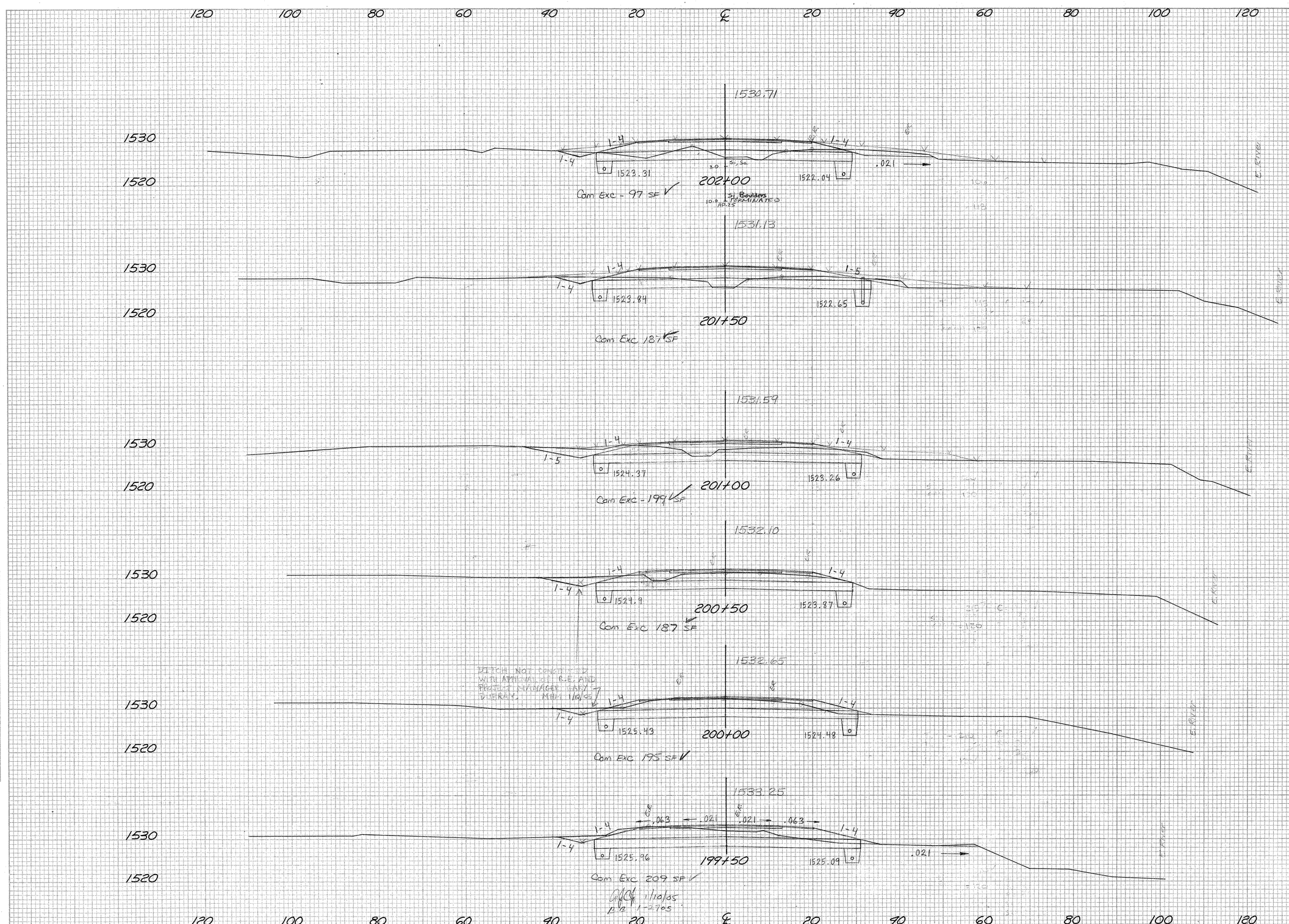

FINAL SURVEY		BY	DATE
NOTE BOOK	SURVEYED		
NO.	PLOTTED		
	TEMPLATE		
	AREAS		
	AREAS CHECKED		

ORIGINAL SURVEY		BY	DATE
NOTE BOOK	SURVEYED		
NO.	PLOTTED	RAC & WRM	1/84
	TEMPLATE		
	AREAS		
	AREAS CHECKED		

[redacted] [redacted] [redacted] OSS SECTION [redacted] EL & ESSER CO

SHEET 385 OF 435 [redacted]

SEARSBURG – WILMINGTON

NHE 010-1 (18)

STA. 202+50 TO 205+00

SHEET 386 OB 435

120 100 80 60 40 20 ℄ 20 40 60 80 100 120

1530 / 1520

1528.95

.050 .015 .021 .063

1-4 1-4

1520.19 — 205+00 — 1518.38

Com Exc - 20 SF ✓

.021

1529.21

.063 .004 .021 .063

1-4 1-4

1520.71 — 204+50 — 1518.99

Com Exc - 12 SF ✓

.021

1529.47

.063 .014 .021 .063

1-4 1-3.5

1521.23 — 204+00 — 1519.6

Com Exc - 76 SF ✓

.021

1529.73

1-4 1-4 1-3.5 1-1.8

1521.75 — 203+50 — 1520.21

Com Exc - 70 SF ✓

.021

STA 203+00 TO STA 204+00 LT
CONSTRUCT SPECIAL DITCH

1530.01

1-4 1-4

1522.27 — 203+00 — 1520.82

Com Exc 29 SF ✓

.021

STA. 203+22 RT.
REMOVE EXISTING 15" RCP

1530.34

.063 .021 .021 .063

1-4 1-4 1-4

1522.79 — 202+50 — 1521.43

Com Exc - 43 SF ✓

.021

0404 11/10/05

BANKING TRANSITION
STORE:
V1 = 50 YD³/FT
V2 = 0.021 YD³/FT
D = 5°00'00" RT
BANK: 0.071 FT/FT

℄ RIVER 205+37.37
205+88.23
205+47.47
205+10
204+70
204+10
203+70
203+10
202+70
202+10
201+70

LT. EDGE
LT. SHLDR.
RT. SHLDR.
RT. EDGE
ALT SHLDR

LATERAL EDGE -0.021
LATERAL SHLDR -0.063
-0.021
-0.063
-0.071

FINAL SURVEY — NOTE BOOK — SURVEYED — PLOTTED — TEMPLATE — AREAS — AREAS CHECKED — NO. — BY — DATE

ORIGINAL SURVEY — NOTE BOOK — SURVEYED — PLOTTED — TEMPLATE — AREAS — AREAS CHECKED — NO. — BY — DATE

SEARSBURG – WILMINGTON
NHF 010-1 (18)
STA 205+50 TO 208+00
SHEET 387 OF 435

STA. 207+00
STA 206+67
STA. 206+50
STA 206+12.5
STA. 206+00
STA 205+75
STA. 205+50
STA. 205+33

PAY LIMIT FOR STEEL BEAM GUARD RAIL
37'6" PAY LIMIT FOR M.T.S.

1527.39
1527.65
1527.91
1528.17
1528.43
1528.69

1530
1520
1510

1-4
1-3
1-2
.021
1518.0
Com Exc - 60 SF

207+65 RT. ~ 208+25 RT.
NEW 6" x 60' UNDERDRAIN
W/ FB @ 208+25 RT.

207+58 RT. ~ 207+65 RT.
NEW 6" x 15' UNDERDRAIN
CARRIER PIPE W/ FB @
207+65 RT.

208+00

Com Exc - 0 SF
From 207+00
90 Back Flow
AP: 20
2.000%
STA. 207+40.42' RT.
INV. 1515.35
207+50

UNDERDRAIN CARRIER PIPE OUTLET
@ STA. 207+58 RT. INV. 1515.2
EXISTING BOX CULVERT
Sta. 207+50, Rt
Remove Existing
10'x5' Conc. Culvert

2'0" STONE FILL
TYPE II (TYP)
1'-0" GRUBBING
MATERIAL (TYP)
2.000%
GEOTEXTILE UNDER
STONE FILL (TYP)
207+00

207+00 RT. ~ 207+37 RT.
NEW 8" x 47' UNDERDRAIN
CARRIER PIPE W/ FB @
207+00 RT.
1516.0
Com Exc - 67 SF

UNDERDRAIN CARRIER
PIPE OUTLET @ STA.
207+37 RT. INV. 1514.9
OUTLET CHANNEL (1:2 SLOPES)
65' LONG x 15' WIDE
W/ STONE FILL TYPE II
(2' DEEP)

STA. 207+14 SKEW ≠ 58° RT.
NEW 11'-1" x 7'-0" x 102'
CAAPPA (.125) W/ CONC. CRADLES
AT BOTH ENDS

MATCH LINE
STA. 205+05
STA. 205+00

INLET CHANNEL (1-2 SLOPES)
60' LONG x 15' WIDE
W/ STONE FILL TYPE II
(2' DEEP)
INV 1517.39
STA 206+80.44' LT

UNDERDRAIN CARRIER PIPE
OUTLET @ STA. 206+75 LT.
INV. 1517.5

206+62 LT. ~ 206+75 LT.
NEW 8" x 24' UNDERDRAIN
CARRIER PIPE W/ FB @
206+62 LT.

206+50

Com. Exc - 47 SF

206+12.5 LT
END MANUFACTURED TERMINAL SECTION-FLARED
BEGIN STEEL BEAM GUARDRAIL

45° 4'

205+75 LT
BEGIN MANUFACTURED TERMINAL SECTION-FLARED

Com Exc - 32 SF

205+82.5 RT.
BEGIN Steel Beam
GUARD RAIL

END MANUFACTURED TERMINAL
SECTION-FLARED

205+50

Com Exc - 38 SF

205+45 RT
BEGIN MANUFACTURED TERMINAL SECTION-FLARED

205+45

STA. 205+05
MATCH LINE

STA 206+57
STA. 206+50
STA 206+32
STA. 206+00
STA 205+82.5
STA. 205+50
STA 205+45
STA. 205+05

1:1
14'
45°
10'
0

LINE OF NORMAL SHOULDER
GUARD RAIL

SCALE
0 10'

AJC 1/11/05
BRD 1-31-05

SECTION
TESSER CO

SHEET 387 OF 435

FINAL SURVEY
NOTE BOOK
NO.
SURVEYED
PLOTTED
TEMPLATE
AREAS
AREAS CHECKED
BY
DATE

ORIGINAL SURVEY
NOTE BOOK
NO.
SURVEYED
PLOTTED
AREAS
AREAS CHECKED
BY
DATE
RAL
1/04

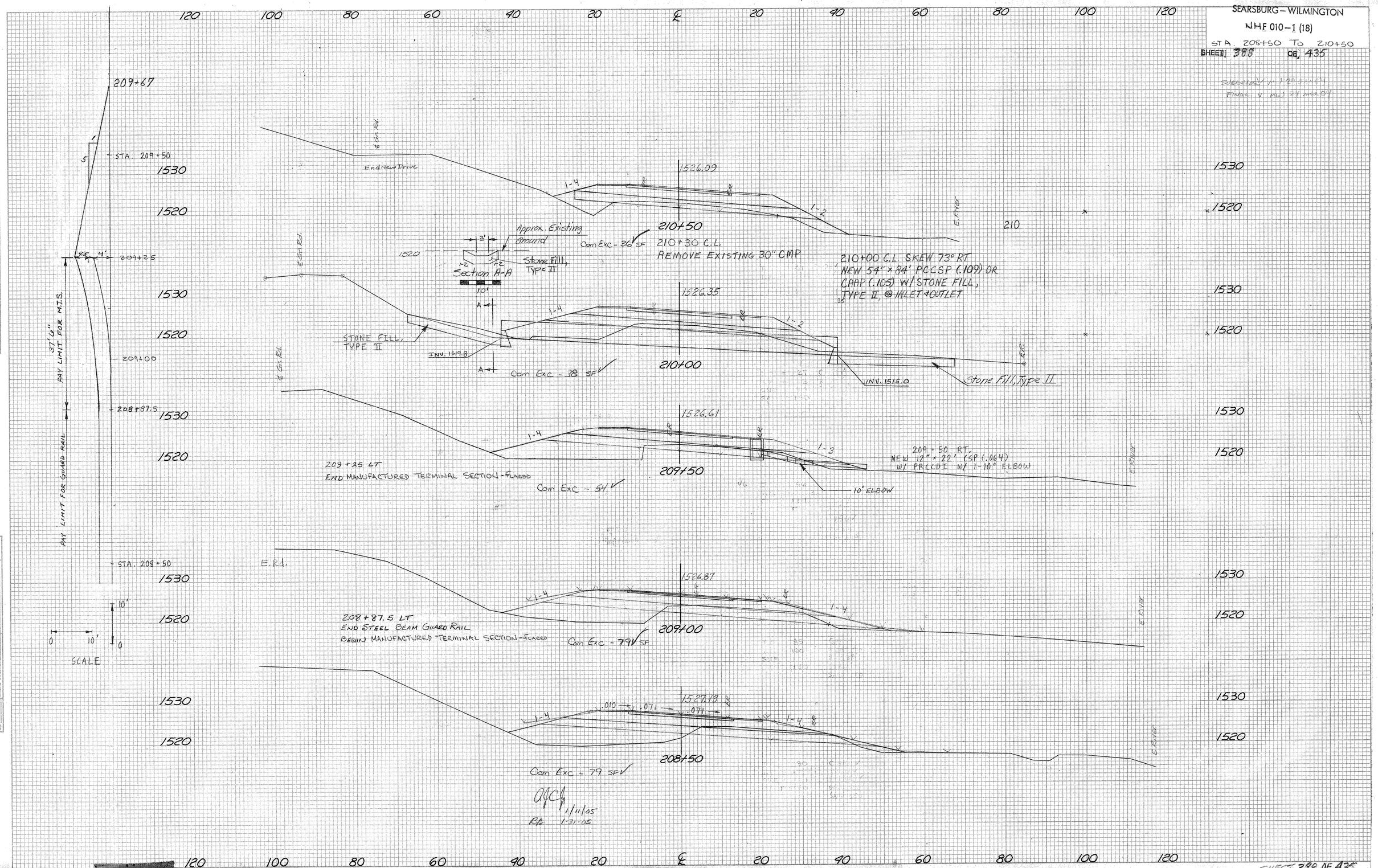
SEARSBURG – WILMINGTON
NHF 010-1 (18)
STA. 208+50 TO 210+50
SHEET 388 OF 435
209+67
STA. 209+50
209+25
209+00
208+87.5
STA. 208+50
37'6" PAY LIMIT FOR M.T.S.
PAY LIMIT FOR GUARD RAIL
End New Drive
1526.09
210+50
210+30 C.L.
REMOVE EXISTING 30" CMP
Com Exc - 36 SF
Approx. Existing Ground
Stone Fill, Type II
Section A-A
210+00 C.L. SKEW 73° RT
NEW 54" × 84' PCCSP (.109) OR
CAAP (.105) W/ STONE FILL,
TYPE II, @ INLET + OUTLET
1526.35
STONE FILL, TYPE II
INV. 1519.8
Com Exc - 38 SF
210+00
INV. 1515.0
Stone Fill, Type II
1526.61
209+25 LT
END MANUFACTURED TERMINAL SECTION - FLARED
Com Exc - 54
209+50
209+50 RT.
NEW 12" × 22' CSP (.064)
W/ PRCCDI W/ 1-10° ELBOW
10° ELBOW
E.Rd.
1526.87
208+87.5 LT
END STEEL BEAM GUARD RAIL
BEGIN MANUFACTURED TERMINAL SECTION - FLARED
Com Exc - 79 SF
209+00
1527.13
Com Exc - 79 SF
208+50
SCALE
1/11/05
1-31-05
SHEET 388 OF 435

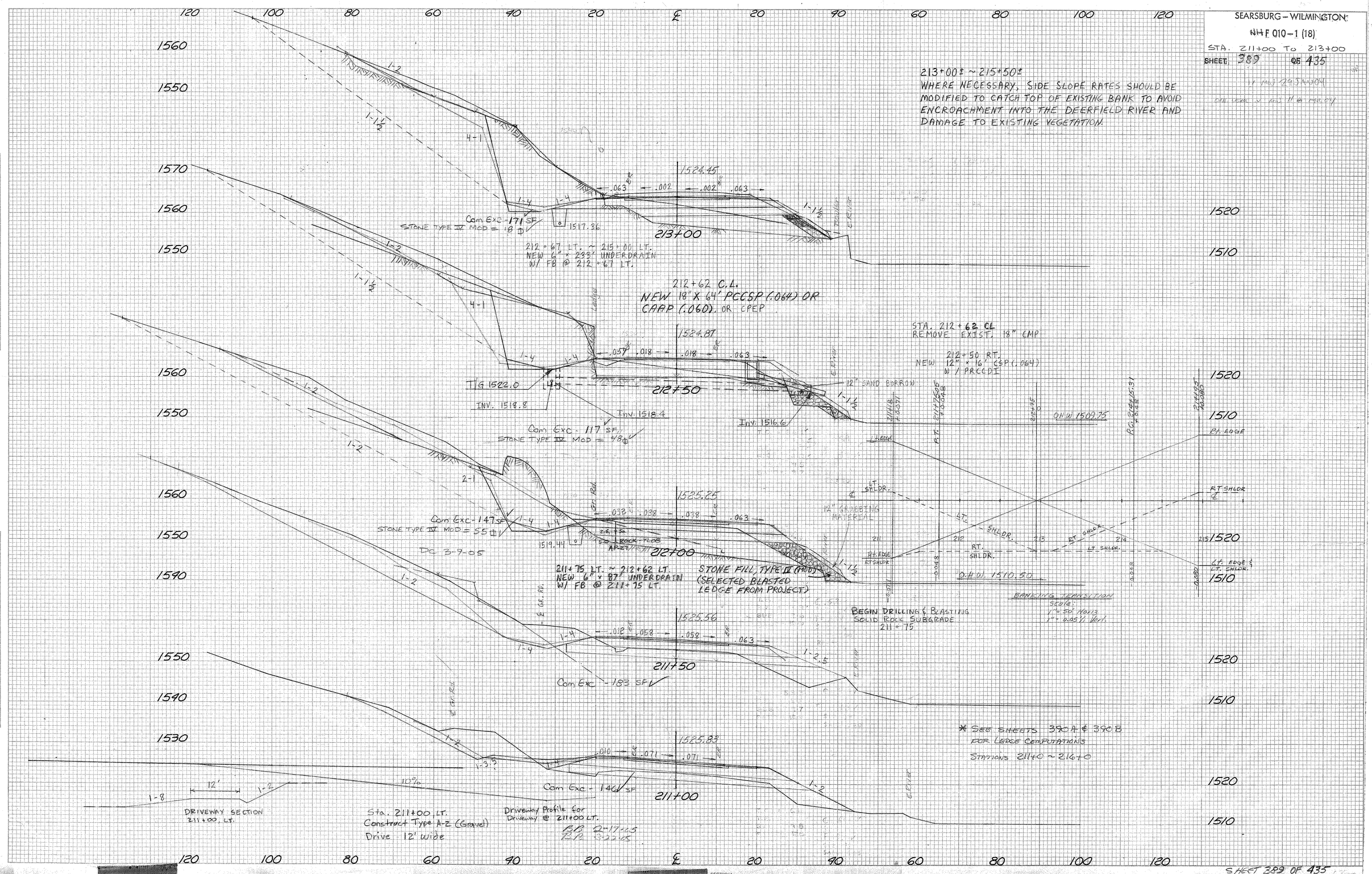
SEARSBURG – WILMINGTON
NH F 010-1 (18)
STA. 211+00 TO 213+00
SHEET 389 OF 435
213+00± ~ 215+50±
WHERE NECESSARY, SIDE SLOPE RATES SHOULD BE MODIFIED TO CATCH TOP OF EXISTING BANK TO AVOID ENCROACHMENT INTO THE DEERFIELD RIVER AND DAMAGE TO EXISTING VEGETATION.
Com Exc - 171 SF
STONE TYPE IV MOD = 18
212+67 LT. ~ 215+00 LT.
NEW 6" x 233' UNDERDRAIN
W/ FB @ 212+67 LT.
213+00
212+62 C.L.
NEW 18" X 64' PCCSP (.064) OR
CAAP (.060), OR CPEP
STA. 212+62 CL
REMOVE EXIST. 18" CMP
212+50 RT.
NEW 12" x 16' CSP (.064)
W/ PRCCDI
12" SAND BORROW
T/G 1522.0
INV. 1518.8
Inv. 1518.4
Inv. 1516.6
Com Exc - 117 SF
STONE TYPE IV MOD = 48
O.H.W. 1509.75
Rt. EDGE
RT SHLDR
LT. SHLDR.
Com Exc - 147 SF
STONE TYPE IV MOD = 55
DC 3-9-05
211+75 LT. ~ 212+62 LT.
NEW 6" x 87' UNDERDRAIN
W/ FB @ 211+75 LT.
STONE FILL, TYPE II (MOD)
(SELECTED BLASTED
LEDGE FROM PROJECT)
12" GRUBBING MATERIAL
O.H.W. 1510.50
BANKING TRANSITION
Scale:
1" = 50' Horiz.
1" = 0.05' Vert.
BEGIN DRILLING & BLASTING
SOLID ROCK SUBGRADE
211+75
Com Exc - 183 SF
* SEE SHEETS 390A & 390B
FOR LEDGE COMPUTATIONS
STATIONS 211+0 ~ 216+0
Com Exc - 146 SF
DRIVEWAY SECTION
211+00, LT.
Sta. 211+00 LT.
Construct Type A-2 (Gravel)
Drive 12' wide
Driveway Profile for
Driveway @ 211+00 LT.
SHEET 389 OF 435

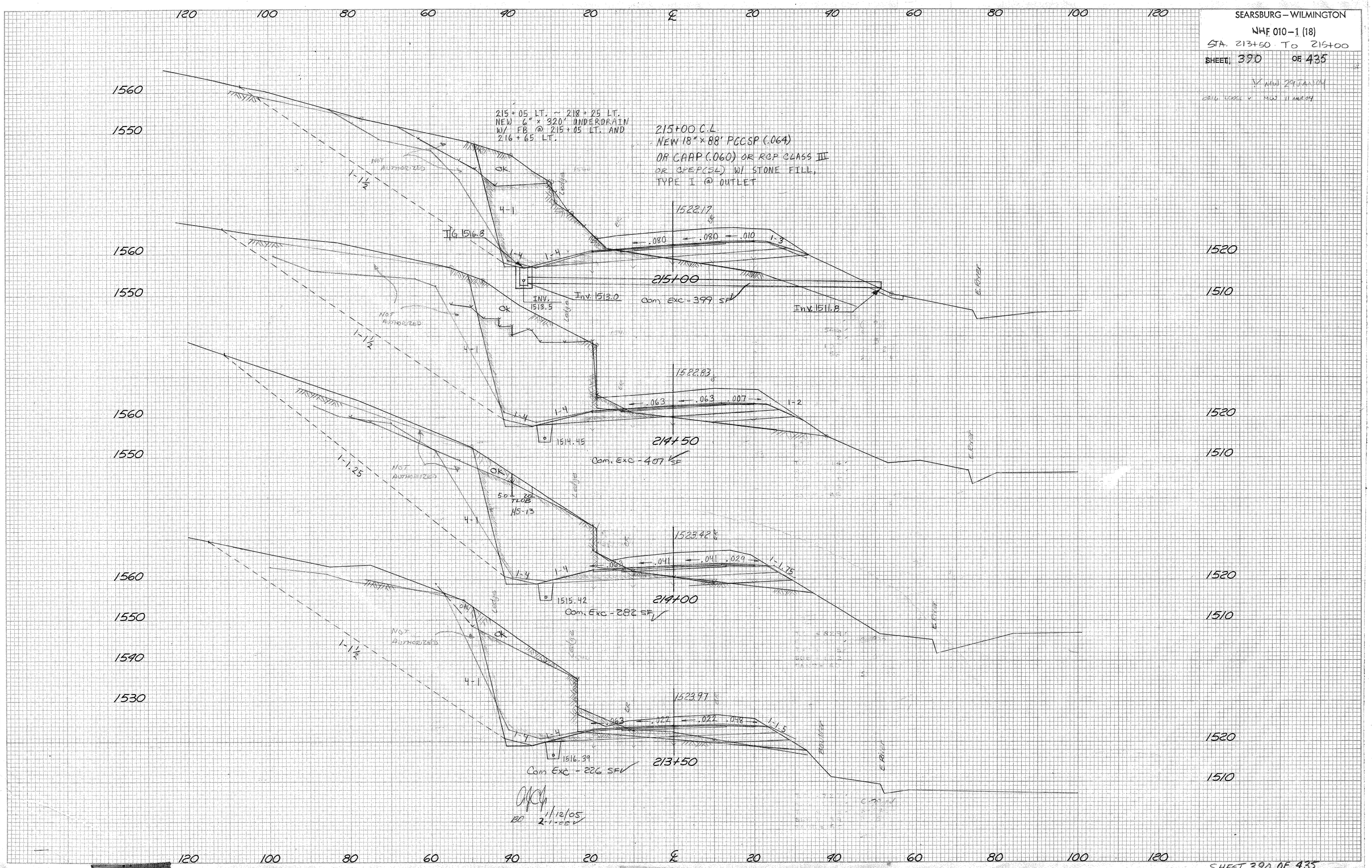
SEARSBURG – WILMINGTON
NHF 010-1 (18)
STA. 213+50 TO 215+00
SHEET 390 OF 435
215+05 LT. ~ 218+25 LT.
NEW 6" x 320' UNDERDRAIN
W/ FB @ 215+05 LT. AND
216+65 LT.
215+00 C.L.
NEW 18" x 88' PCCSP (.064)
OR CAAP (.060) OR RCP CLASS III
OR CPEP(SL) W/ STONE FILL,
TYPE I @ OUTLET
1522.17
215+00
Com. Exc - 399 SF
Inv. 1513.0
Inv. 1511.8
INV. 1513.5
1522.83
214+50
Com. Exc - 407 SF
1514.45
1523.42
214+00
Com. Exc - 282 SF
1515.42
1523.97
213+50
Com Exc - 226 SF
1516.39
NOT AUTHORIZED
OK
4-1
1-1½
1-1.25
1-4
1-3
1-2
1-1.75
1-1.5
E. River
Boulder
Ledge
1/12/05
2-1-05
SHEET 390 OF 435

℄

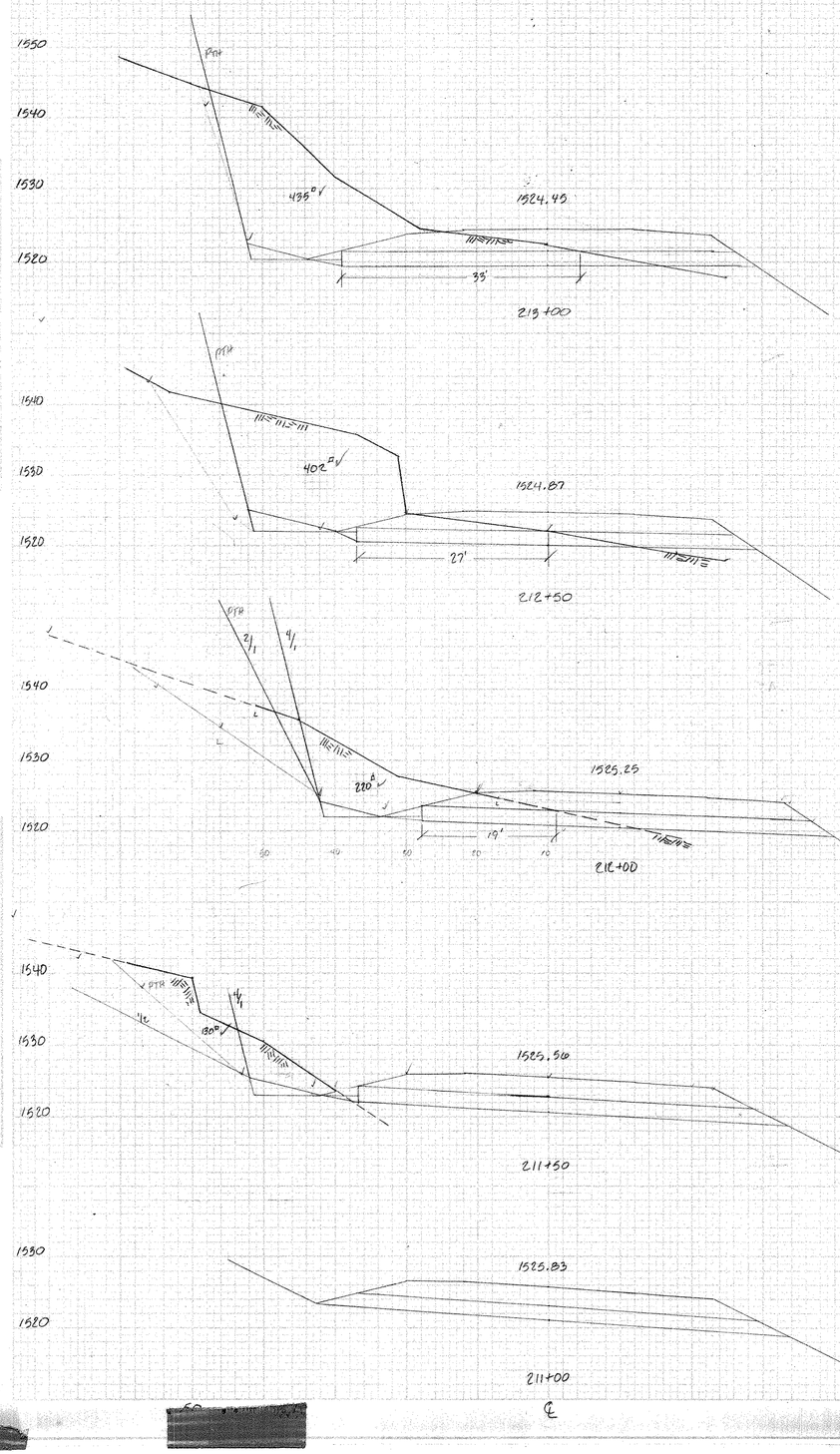

Solid Rock Excavation
Item 203.16

Drilling + Blasting Solid Rock Subgrade
Item 205.20

Sta	Area (SF)	Dist	Vol. (cy)	Width (ft)	Area (SY)
211+00	0 ✓				
		50'	180.4 ✓	0	✓
211+50	130 ✓				52.8 ✓
		50'	324.1 ✓	19	
212+00	220 ✓				127.8 ✓
		50	575.9 ✓	27	
212+50	408 ✓				166.7 ✓
		50	775.0 ✓	33	
213+00	435 ✓				188.9 ✓
		50	946.3 ✓	35	
213+50	587 ✓				188.9 ✓
		50	1145.4 ✓	33	
214+00	650 ✓				
		25	621.8 ✓		186.1 ✓
+25	693 ✓				
		25	648.6 ✓	34	
+50	708 ✓				✓
		25	668.0 ✓		186.1
+75	722 ✓				
		25	594.4 ✓	33	
215+00	562 ✓				✓
		25	503.2 ✓		186.1
+25	525 ✓				
		25	451.4 ✓	34	
+50	450 ✓				✓
		25	374.1 ✓		94.8
+75	358 ✓				
		25	165.7 ✓	0	
216+00	0 ✓				

7908.3 cy ✓ 12/16/03 CWG — Book 1 Page 71

1377.8 SY ✓ 12/16/03 CWG — Book 1A Page 59

✓cd
AEC
4/15/04

SEARSBURG - WILMINGTON
NH-F010-1(18)

Searsburg - Wilmington
Ledge

Sta. 211+00
~ 214+00

SHEET. 390A OF 435

PLATE 38 ... TYPICAL CROSS SECTIONS ... CENTER LINE

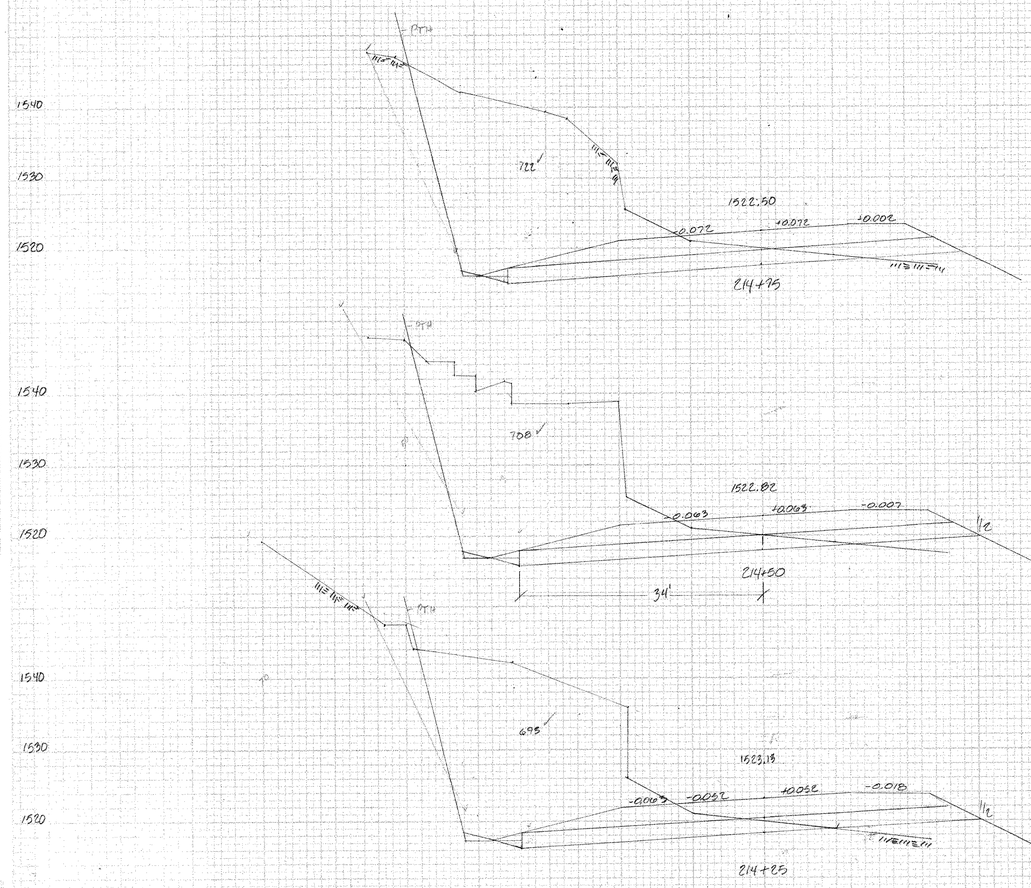

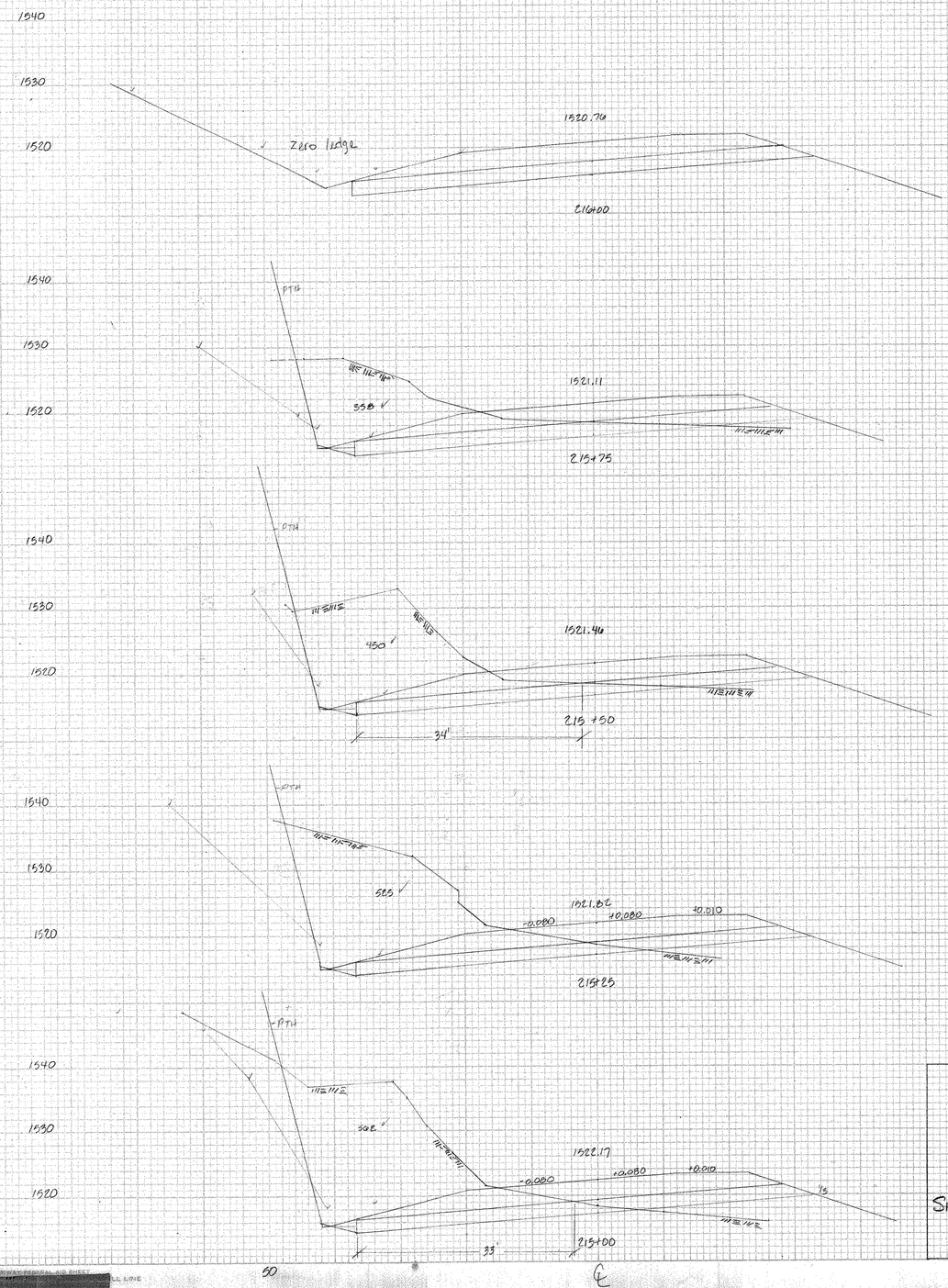

SEARSBURG - WILMINGTON
NH-F010-1(18)

Searsburg - Wilmington
Ledge
214+25 — 216+00

SHEET 390 B OF 435

50

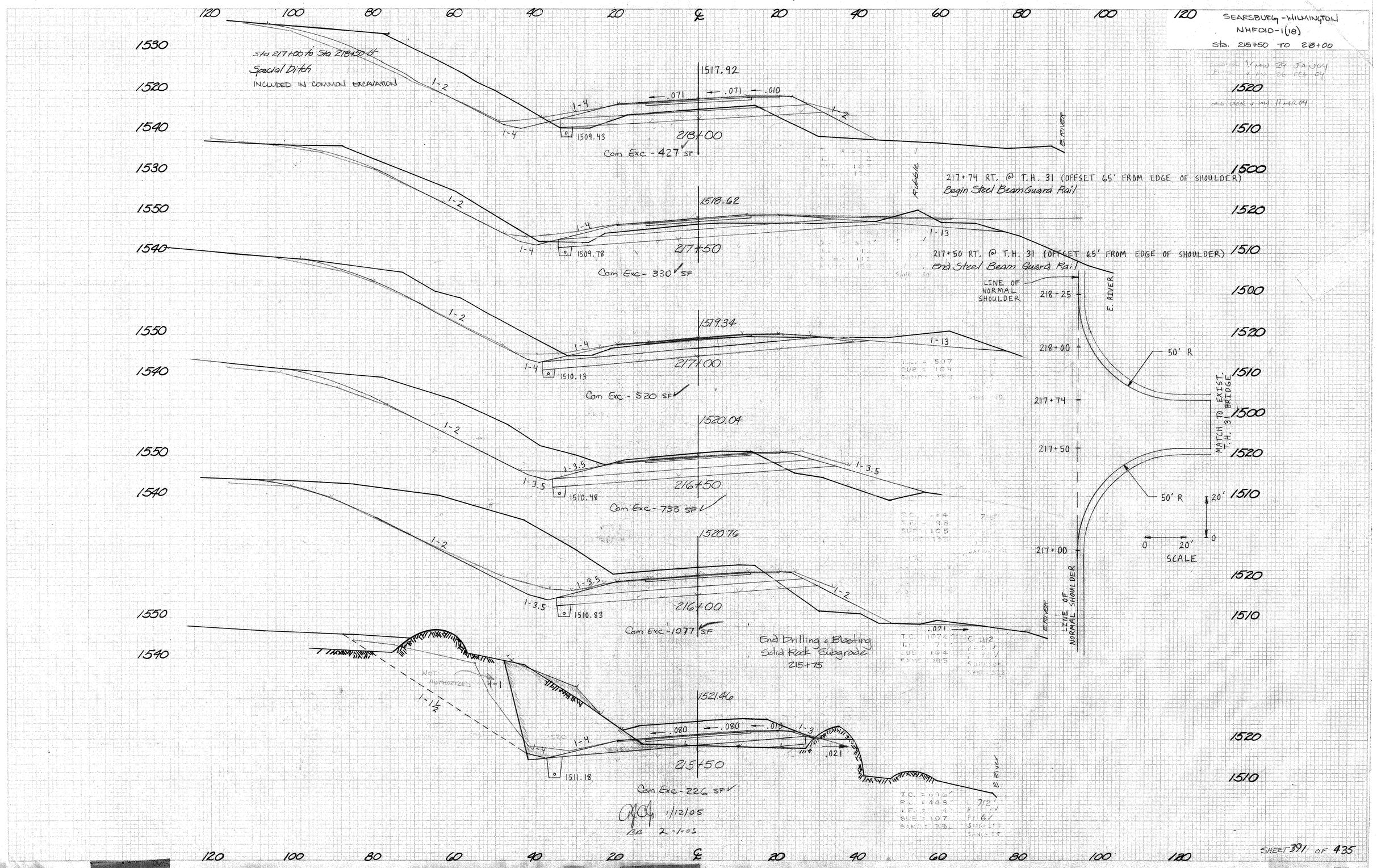
SEARSBURG - WILMINGTON
NHF010-1(18)
Sta. 215+50 TO 218+00
Sta 217+00 to Sta 218+50 Lt
Special Ditch
INCLUDED IN COMMON EXCAVATION
1517.92
218+00
Com Exc - 427 SF
1509.43
1518.62
217+50
Com Exc - 330 SF
1509.78
217+74 RT. @ T.H. 31 (OFFSET 65' FROM EDGE OF SHOULDER)
Begin Steel Beam Guard Rail
217+50 RT. @ T.H. 31 (OFFSET 65' FROM EDGE OF SHOULDER)
End Steel Beam Guard Rail
LINE OF NORMAL SHOULDER
E. RIVER
Rubble
1519.34
217+00
Com Exc - 520 SF
1510.13
1520.04
216+50
Com Exc - 733 SF
1510.48
1520.76
216+00
Com Exc - 1077 SF
1510.83
End Drilling & Blasting
Solid Rock Subgrade
215+75
1521.46
215+50
Com Exc - 226 SF
1511.18
NOT AUTHORIZED
50' R
MATCH TO EXIST. T.H. 31 BRIDGE
SCALE
1/12/05
2-1-05

SEARSBURG-WILMINGTON
NHF 010-1(18)
Sta. 218+80 to 220+50

120 100 80 60 40 20 ℄ 20 40 60 80 100 120

1530 1520 1510

12" GRUBBING MATERIAL
DR ℄
2 Lane Dr (Exist)
1-1.5
1524.71
Stone Fill Type II
STA 220+20 - 224+40
Construct Concrete Retaining WALL
1-3
1-4
.063 .021 .019 .063
1514.37
EXP
EXP
1-1½
EMBER
1507.17
220+50
Com Exc - 338 SF
STONE TYPE III MOD = 29 ℄
GEO UNDER S.F. = 8.5 LF
DC 3-7-05
8.5
1520 1510

1530 1520 1510

DR ℄
PTH
2 Lane Dr (Exist)
1-1.5
1520.93
1.0 - Sa
6.0 - Sa, Si, Gr
11.0 - Sa, Si, Gr
15.0 - Sa
15.9 - Retrieval
1-3.5
1507.62
1515.08
.063 .021 .007 .063
1-1½
EMBER
12" GRUBBING MATERIAL
220+00
Com Exc - 606 SF
STONE TYPE IV MOD = 41 ℄
DC 3-7-05
Sa
Cattle Pass TL08
AP-08
D.I.W. 1502.50
STONE FILL, TYPE III (MOD.)
(SELECTED BLASTED LEDGE FROM THIS PROJECT)
GEO UNDER S.F. = 8 LF
DC 3-8-05
219+60 C.L.
REMOVE EXIST. 15" RCP AND 18" CMP
* KEYWAY EXC. PAID AS Item 203.27 - UNCL. CHAN EXC. SEE WRITTEN ORDER #60 STA. 220+0 ~ 220+50
1520 1510

1530 1520 1510

12" GRUBBING MATERIAL
DR ℄
PTH
1-1.5
Stone Fill Type II
1517.07
1-2
1-5
.063 .021 .007 .063
1515.78
1-2
1508.07
219+50
Com Exc - 168 SF
STA 219+25 ~ 220+75 LT (Drive)
STONE FILL TYPE II
(SLOPE BLANKET)
Sta. 218+50 ~ 225+75
Construct 16' Wide Gravel Drive (TYPE A-2)
*Sta. 218+50 ~ 219+50 (PAVED)
Sta. 223+50 ~ 225+75 (PAVED)
Sta. 219+35 ~ 224+75 LT.
New 6' wide 540' Long Sodded Gutter
1520 1510

1530 1520 1510

PTH
1-2
1-4
1-3
1515.47
.063 .029 .029 .041
1516.50
1508.52
219+00
Com Exc - 936 SF
218+75 LT. ~ 223+46 LT.
NEW 6" x 471' UNDERDRAIN W/ FB @ 218+75 LT. AND 221+11 LT.
1520 1510

1530 1520 1510

1-2
1-4
218+50 LT. ~ 219+25 LT.
SPECIAL DITCH W/ STONE FILL, TYPE II
INCLUDED IN COMMON EXCAVATION
.063 .050 .050 .020
1517.20
1-2
UNDERDRAIN CARRIER PIPE
OUTLET @ STA. 218+50 LT.
INV. 1508.9
INV. 1508.7
218+25 LT. ~ 218+50 LT.
NEW 6" x 31' UNDERDRAIN CARRIER PIPE W/ FB @ 218+25 LT.
Com Exc - 589 SF
218+50
218+50 C.L.
NEW 30" x 88' PCCSP (.079) OR CAAP (.075) OR RCP CLASS III OR CPEP(SL) W/STONE FILL TYPE II @ INLET & OUTLET W/CSPES OR CAAPES W/ EARS @ INLET
1506.1
218+49 C.L.
REMOVE EXIST. 18" RCP
Stone Fill, Type II
8' Wide
1520 1510

RT EDGE
2.17+80 +0.080
RT. 218+93.48 +0.023
2.17+21 +0.079
2.19+70 0
2.20+61.5
RT. SHLDR.
LT. & RT EDGE -0.021
LT. SHLDR -0.063
LT EDGE & SHLDR
-0.080
-0.063
-0.021
-0.021
-0.021
LT. & RT. SHLDR -0.063
218
219
220
Banking Transition
Scale:
1" = 50' Horiz.
1" = 0.05' Vert.
D = 7° 30' LT
Bank = 0.080 FT/FT

SHEET 392 OF 435

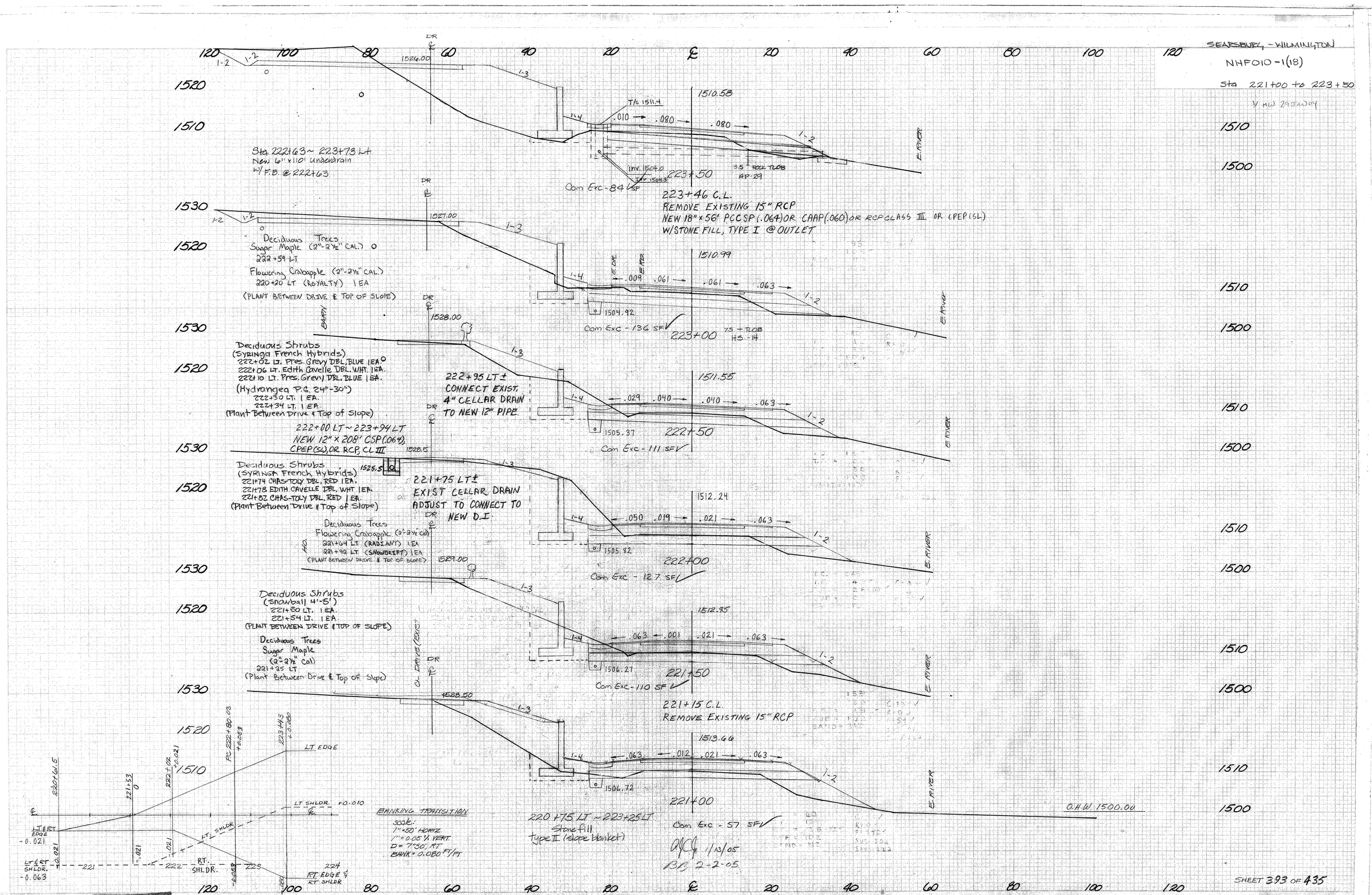
SEARSBURG - WILMINGTON
NHF010-1(18)
Sta 221+00 to 223+50
V MW 29 JAN 04
Sta. 222+63 ~ 223+73 Lt.
New 6" x 110' underdrain
w/ F.B. @ 222+63
Com Exc - 84 SF
223+50
223+46 C.L.
REMOVE EXISTING 15" RCP
NEW 18" x 56' PCCSP (.064) OR CAAP (.060) OR RCP CLASS III OR CPEP (SL)
W/STONE FILL, TYPE I @ OUTLET
Deciduous Trees
Sugar Maple (2"-2½" CAL.)
222+59 LT.
Flowering Crabapple (2"-2½" CAL.)
220+20 LT (ROYALTY) 1 EA
(PLANT BETWEEN DRIVE & TOP OF SLOPE)
Com Exc - 136 SF
223+00
Deciduous Shrubs
(Syringa French Hybrids)
222+02 LT. Pres. Grevy DBL. BLUE 1 EA.
222+06 LT. Edith Cavelle DBL. WHT. 1 EA.
222+10 LT. Pres. Grevy DBL. BLUE 1 EA.
(Hydrangea P.G. 24"-30")
222+30 LT. 1 EA.
222+34 LT. 1 EA.
(Plant Between Drive & Top of Slope)
222+95 LT ±
CONNECT EXIST.
4" CELLAR DRAIN
TO NEW 12" PIPE
222+00 LT ~ 223+94 LT
NEW 12" x 208' CSP (.064),
CPEP (SL), OR RCP, CL III
Com Exc - 111 SF
222+50
Deciduous Shrubs
(SYRINGA French Hybrids)
221+74 CHAS-TOLY DBL. RED 1 EA.
221+78 EDITH CAVELLE DBL. WHT 1 EA.
221+82 CHAS-TOLY DBL. RED 1 EA.
(Plant Between Drive & Top of Slope)
221+75 LT ±
EXIST CELLAR DRAIN
ADJUST TO CONNECT TO
NEW D.I.
Deciduous Trees
Flowering Crabapple (2"-2½" cal)
221+64 LT (RADIANT) 1 EA
221+92 LT (SNOWDRIFT) 1 EA
(PLANT BETWEEN DRIVE & TOP OF SLOPE)
Com Exc - 127 SF
222+00
Deciduous Shrubs
(Snowball 4'-5')
221+50 LT. 1 EA.
221+54 LT. 1 EA.
(PLANT BETWEEN DRIVE & TOP OF SLOPE)
Deciduous Trees
Sugar Maple
(2"-2½" Cal)
221+25 LT
(Plant Between Drive & Top of Slope)
Com Exc - 110 SF
221+50
221+15 C.L.
REMOVE EXISTING 15" RCP
Com Exc - 57 SF
221+00
220+75 LT ~ 223+25 LT
Stone fill
Type II (slope blanket)
O.H.W. 1500.00
BANKING TRANSITION
scale:
1" = 50' HORIZ.
1" = 0.05' VERT.
D = 7°30' RT
BANK = 0.080 FT/FT
LT EDGE
LT SHLDR. +0.010
LT & RT EDGE -0.021
LT & RT SHLDR. -0.063
RT. SHLDR.
RT EDGE & RT SHLDR
1/13/05
2-2-05
SHEET 393 OF 435

SEARSBURG – WILMINGTON
NHF 010-1 (18)
STA. 224+00 TO 226+00
SHEET 394 OF 435

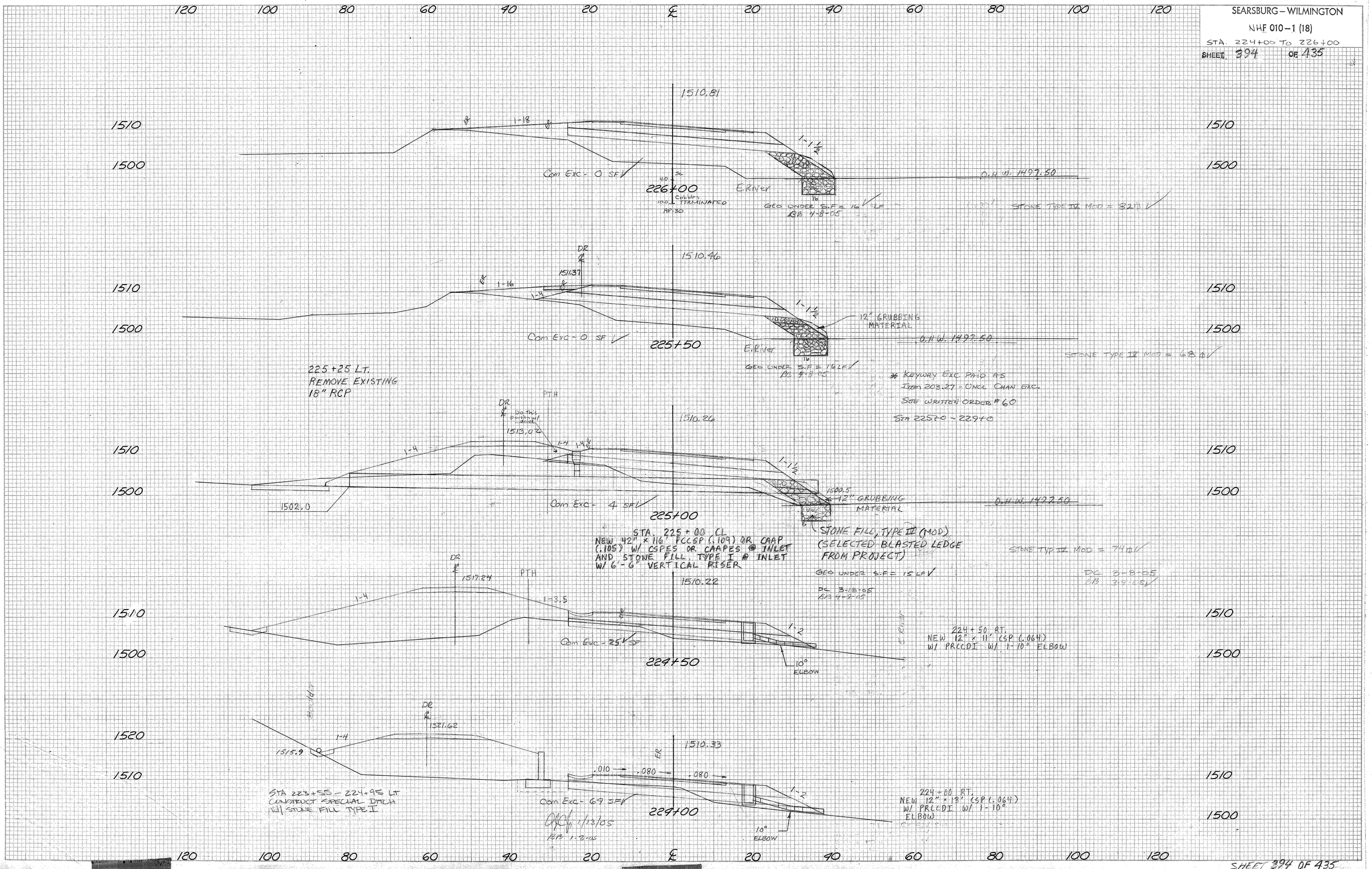

FINAL SURVEY | SURVEYED | PLOTTED | TEMPLATE | AREAS | AREAS CHECKED | NO. | MOTE BOOK | BY | DATE

ORIGINAL SURVEY | SURVEYED | PLOTTED | TEMPLATE | AREAS | AREAS CHECKED | NO. | MOTE BOOK | BY | DATE

SEARSBURG – WILMINGTON

NHF 010-1 (18)

STA. 226+50 To 228+00

SHEET 395 OF 435

FINAL SURVEY — SURVEYED / PLOTTED / TEMPLATE / AREAS — NOTE BOOK — NO. — AREAS CHECKED — BY — DATE

ORIGINAL SURVEY — SURVEYED / PLOTTED / TEMPLATE / AREAS — NOTE BOOK — NO. — AREAS CHECKED — BY — DATE

120 100 80 60 40 20 ℄ 20 40 60 80 100 120

1530 1520 1510 1500 1490

1512.79

.060 EX. 1-2 1-4 .034 .036 .034 .063 E.R. 1-1½

T/B 1504.5

INV. 1504.3

Com Exc - 106 SF ✓

12" SAND BORROW AROUND PIPE

INV 1503.0

O.H.W. 1496.50

12" GRUBBING MATERIAL

O.H.W. 1496.50

228+00

228+00 C.L.
NEW 18"x68' PCCSP (.064)
OR CAAP (.060)
OR CPEP (GL)

STONE TYPE IV MOD = 111 ☐
CBED UNDER S.F. = 14 LF ✓
DC 4-8-05

1512.29

EX. .021 1-3.5 E.R. 3.5 .013 .056 .056 .063 1-1½ E.RIVER

Com Exc - 9 SF ✓

O.H.W. 1496.75

16' 12" Subbase of Gravel .021 .021 1-2 1-2

STA. 226+75 LT.
New 15"x32' CSP .064, RCP CLASS III OR (PEP (GL)

Section A-A 10'

227+50

STONE TYPE IV MOD = 95 ☐ ✓
CBED UNDER S.F. = 15 LF ✓
DC 4-8-05

* KEYWAY EXC PAID AS
ITEM 203.27 - UNCL CHAN EXC.
SEE WRITTEN ORDER # 60
STA 225+0 ~ 229+0

1511.79

EX. 1-2.7 .010 .077 .077 E.RIVER 1-1½

227+00 ~ 228+50 LT
SPECIAL DITCH (4' WIDE x 1.66')

Com Exc - 0 SF ✓

A A 5% 1-4 INTERPOLATED SECTION

226+75

226+75 Lt.
Construct Field Drive
(TYPE A-1)

1511.54

227+00

STONE TYPE IV MOD = 86 ☐ ✓
CBED UNDER S.F. = 15 LF ✓
DC 4-8-05

1511.29

EX. 1-18 .010 .080 .080 E.RIVER 1-1½

12" GRUBBING MATERIAL

CBED UNDER S.F. = 15 LF ✓
DC 3-18-05
RB 4-8-05

Com Exc - 0 SF ✓
DC 11/3/05
LB 2-3-05

226+50 RT.
NEW 12" x 17' CSP
(.064) W/ PRCCDI

226+50

STONE TYPE III MOD = 60 ☐ ✓
DC 3-8-05

227 228 229 230

224+23 TO 223+23 — 224+23 TO 225+23 — 226+93 TO 227+93 — 228+34 TO 229+34

℄ LT. EDGE — LT. SHLDR. — RT. EDGE & SHLDR. — RT. SHLDR. -0.063 — LT. & RT. EDGE -0.021 — LT. & RT. SHLDR. -0.063

BANKING TRANSITION
SCORE
1"=50' 16m3.
1"=0.05% Vert.
D= 7230' Rt.
BANK = 0.080 Ft/Ft.

SHEET 395 OF 435.

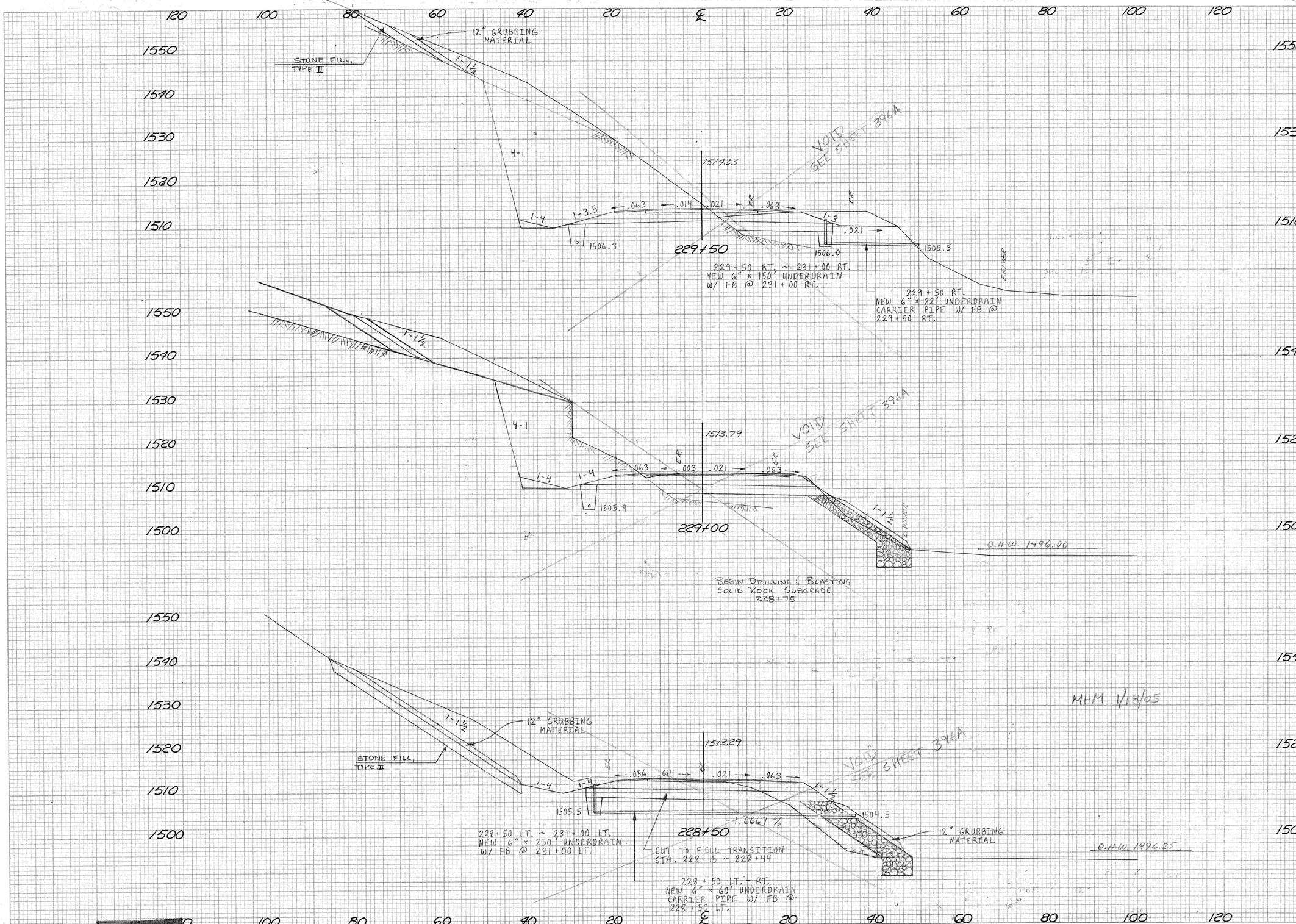

FINAL SURVEY | NOTE BOOK | NO. | SURVEYED | PLOTTED | TEMPLATE | AREAS | AREAS CHECKED | BY | DATE

ORIGINAL SURVEY | NOTE BOOK | NO. | SURVEYED | PLOTTED | TEMPLATE | AREAS | AREAS CHECKED | BY | DATE

[redacted] KEUFFEL & [redacted] SECTION

[redacted]

SEARSBURG – WILMINGTON

NHE 010-1 (18)

STA. 225+50 TO 229+50

SHEET 396 OF 435

REVISED 1590 V MAR 29 2004

REVISED 1580

REVISED 1570

REVISED 1560

REVISED 1550

REVISED 1540

ORIGINAL SURVEY
NOTE BOOK
SURVEYED
PLOTTED
TEMPLATE
AREAS
AREAS CHECKED
NO.
BY
DATE

ORIGINAL SURVEY
NOTE BOOK
SURVEYED
PLOTTED
TEMPLATE
AREAS
AREAS CHECKED
NO.
BY
DATE

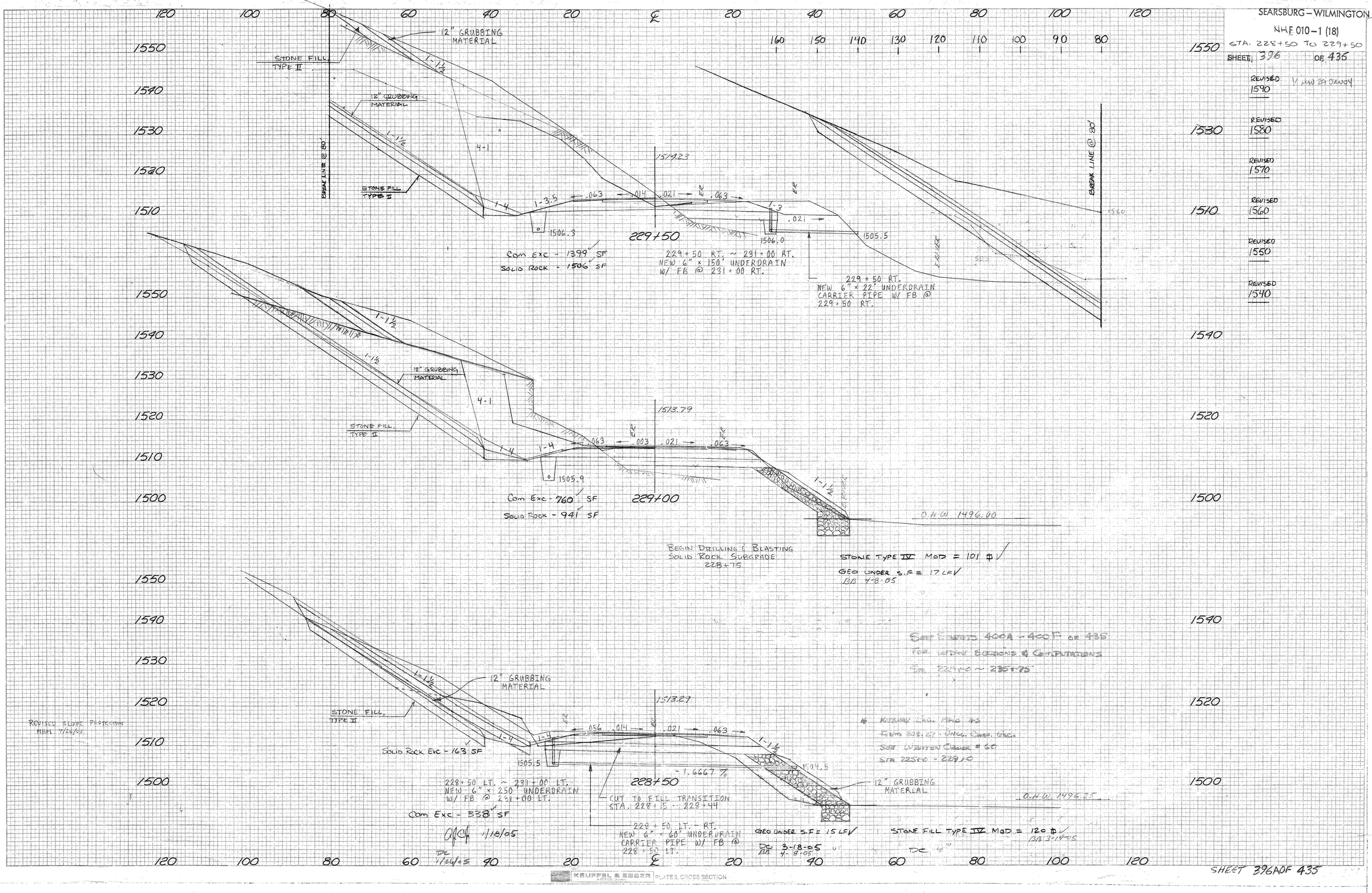

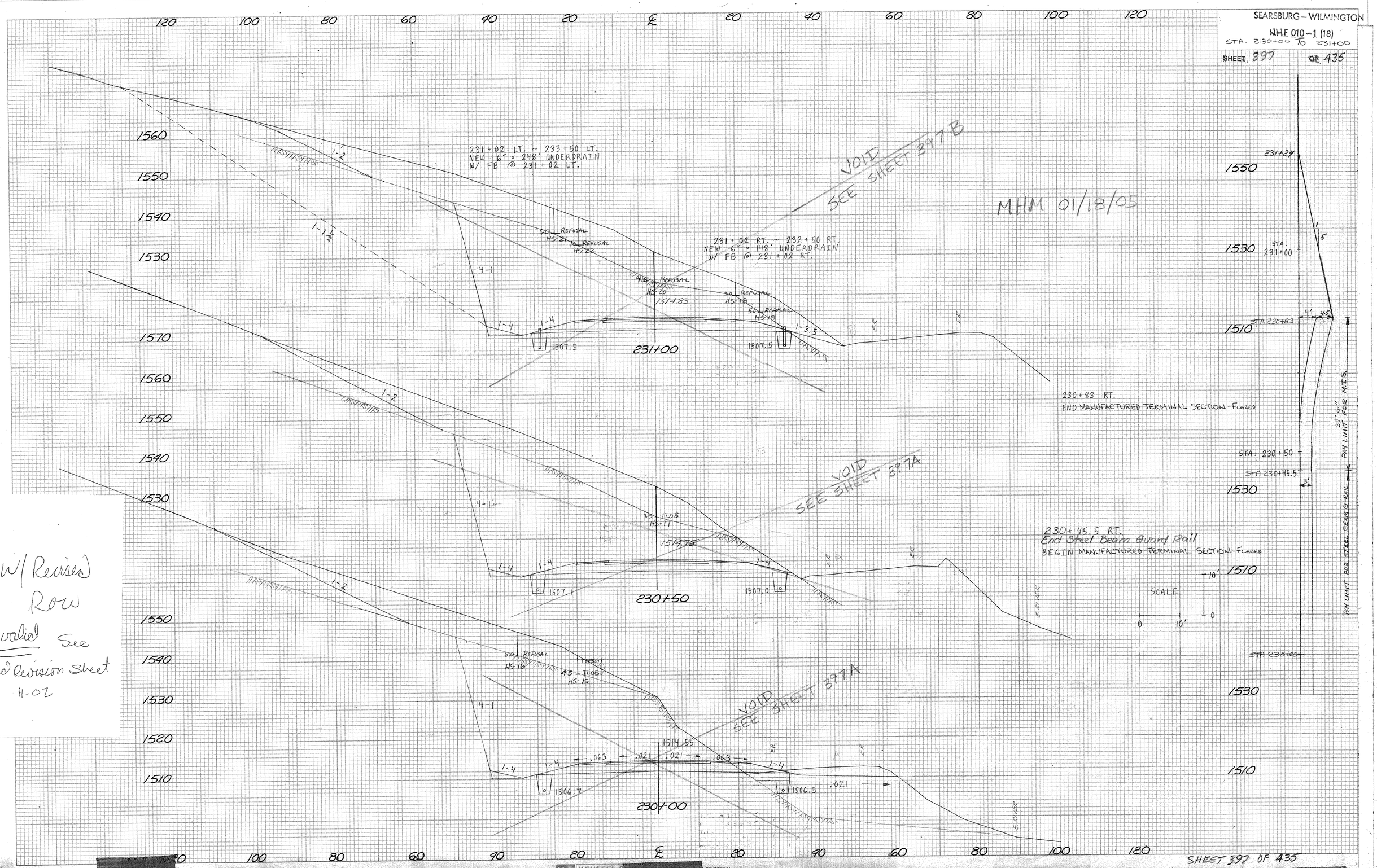
SEARSBURG – WILMINGTON
NHF 010-1 (18)
STA. 230+00 TO 231+00
SHEET 397 OF 435
231+02 LT. ~ 233+50 LT.
NEW 6" × 248' UNDERDRAIN
W/ FB @ 231+02 LT.
231+02 RT. ~ 232+50 RT.
NEW 6" × 148' UNDERDRAIN
W/ FB @ 231+02 RT.
VOID
SEE SHEET 397B
MHM 01/18/05
230+83 RT.
END MANUFACTURED TERMINAL SECTION - FLARED
230+45.5 RT.
End Steel Beam Guard Rail
BEGIN MANUFACTURED TERMINAL SECTION - FLARED
VOID
SEE SHEET 397A
VOID
SEE SHEET 397A
231+00
230+50
230+00
1514.83
1514.75
1514.55
1507.5
1507.5
1507.1
1507.0
1506.7
1506.5
SCALE
0
10'
STA. 231+00
STA 230+83
STA. 230+50
STA 230+45.5
STA 230+00
PAY LIMIT FOR STEEL BEAM G-RAIL
PAY LIMIT FOR M.T.S.
37'-6"
W/ Revised Row
Invalid See 2nd Revision Sheet H-02
SHEET 397 OF 435
KEUFFEL S
SECTION

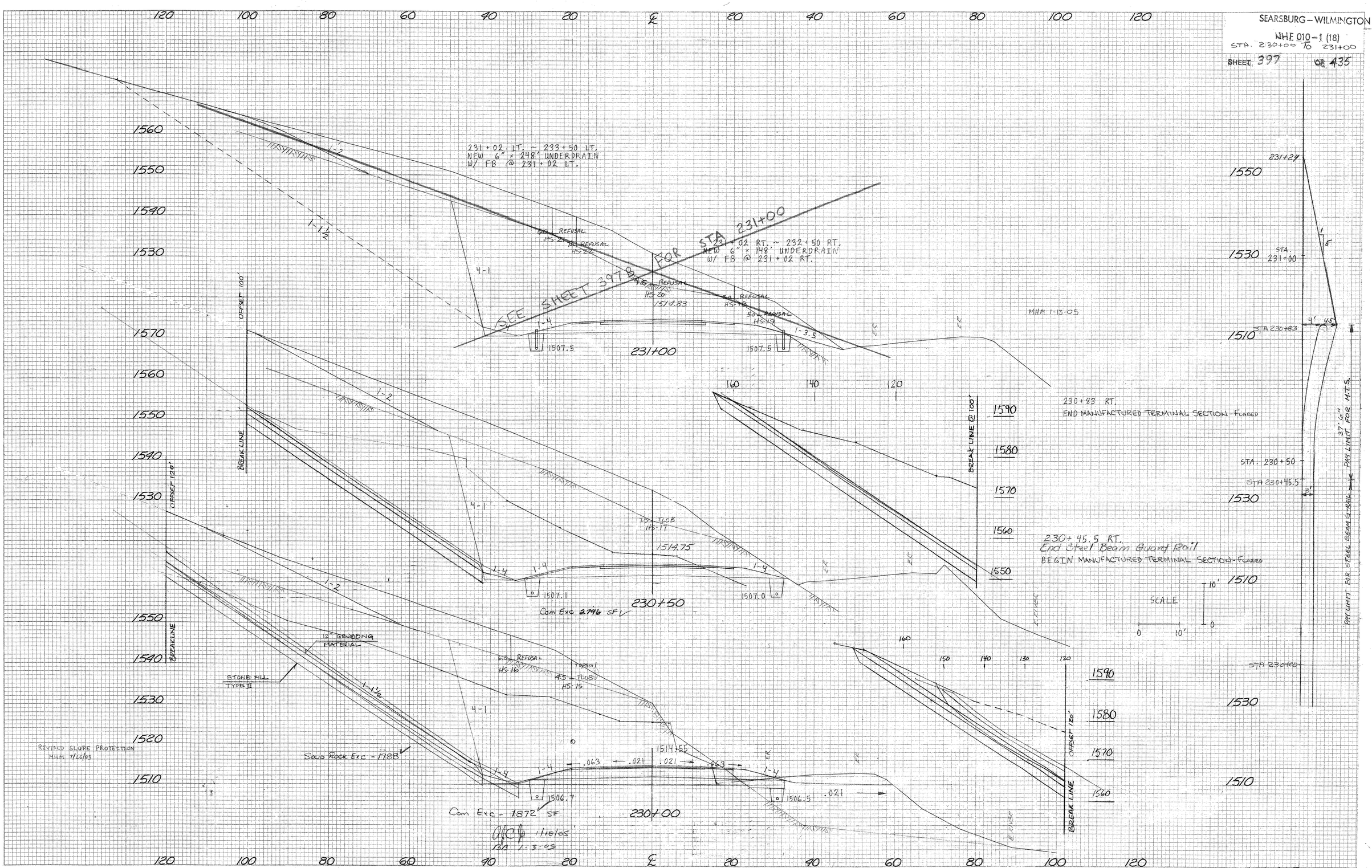
SEARSBURG – WILMINGTON
NHF 010-1 (18)
STA. 230+00 TO 231+00
SHEET 397 OF 435
231+02 LT. ~ 233+50 LT.
NEW 6" × 248' UNDERDRAIN
W/ FB @ 231+02 LT.
231+02 RT. ~ 232+50 RT.
NEW 6" × 148' UNDERDRAIN
W/ FB @ 231+02 RT.
SEE SHEET 397B FOR STA 231+00
MHM 1-13-05
230+83 RT.
END MANUFACTURED TERMINAL SECTION-FLARED
230+45.5 RT.
End Steel Beam Guard Rail
BEGIN MANUFACTURED TERMINAL SECTION-FLARED
SCALE
PAY LIMIT FOR STEEL BEAM G-RAIL
PAY LIMIT FOR M.T.S.
STA. 230+50
STA 230+45.5
STA 230+83
STA 231+00
STA 230+00
231+24
OFFSET 100'
OFFSET 120'
BREAK LINE
BREAK LINE @ 100'
12" GRUBBING MATERIAL
STONE FILL TYPE II
REVISED SLOPE PROTECTION
MHM 7/26/03
Com Exc 2796 SF
Com Exc - 1872 SF
Solid Rock Exc - 1788
230+50
230+00
231+00
1514.83
1514.75
1514.55
1507.5
1507.1
1507.0
1506.7
1506.5
1-2
1-1½
1-4
4-1
1-3.5
.063
.021
SHEET 397A OF 435
KEUFFEL & ESSER
PLATE 3, CROSS SECTION

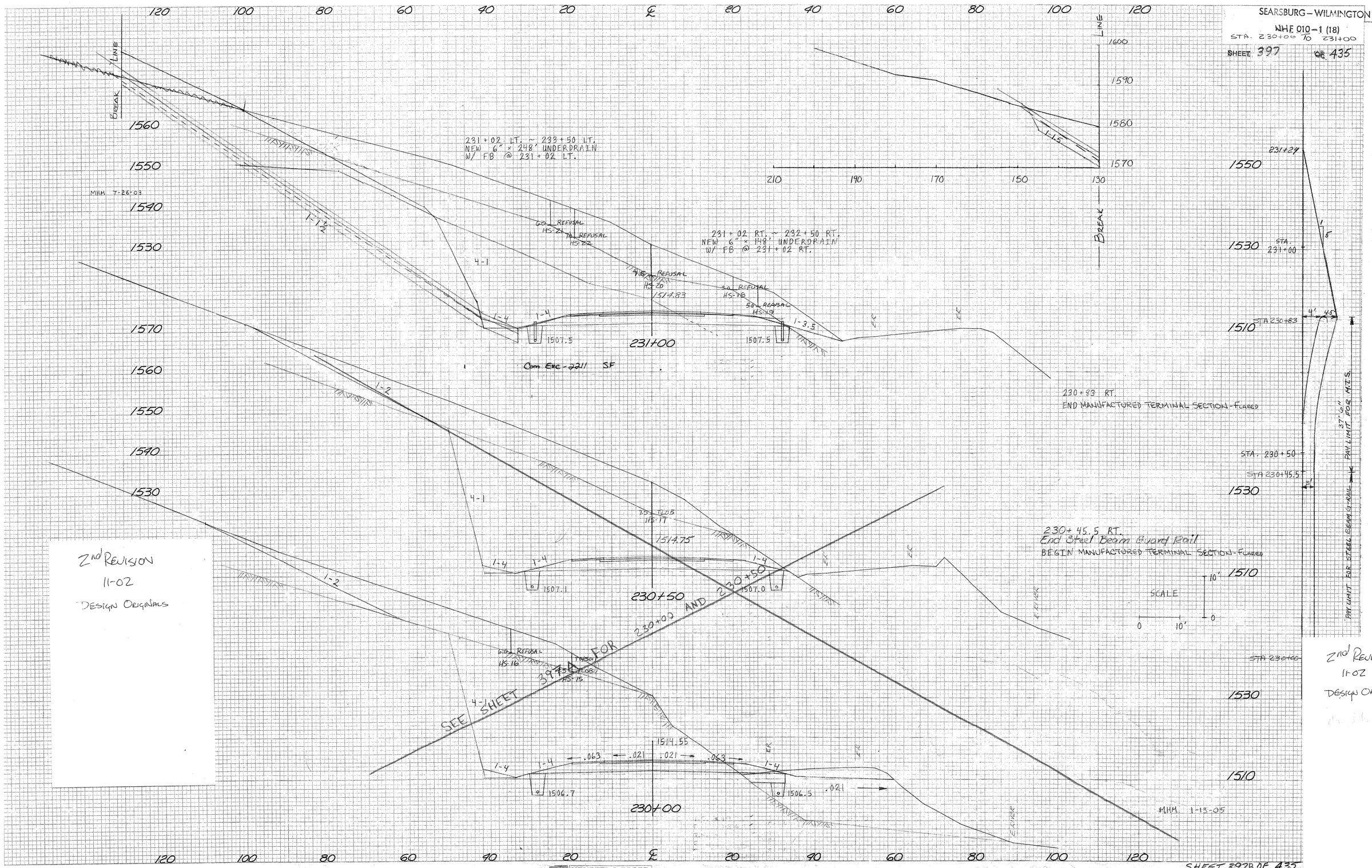
SEARSBURG – WILMINGTON
NHE 010-1 (18)
STA. 230+00 TO 231+00
SHEET 397 OF 435
231+02 LT. ~ 233+50 LT.
NEW 6" × 248' UNDERDRAIN
W/ FB @ 231+02 LT.
231+02 RT. ~ 232+50 RT.
NEW 6" × 148' UNDERDRAIN
W/ FB @ 231+02 RT.
230+83 RT.
END MANUFACTURED TERMINAL SECTION - FLARED
230+45.5 RT.
End Steel Beam Guard Rail
BEGIN MANUFACTURED TERMINAL SECTION - FLARED
231+00
230+50
230+00
Com Exc - 2211 SF
SEE SHEET 397A FOR 230+00 AND 230+50
MHM 7-26-03
MHM 1-13-05
2nd REVISION
11-02
DESIGN ORIGINALS
SCALE
PAY LIMIT FOR STEEL BEAM G-RAIL
PAY LIMIT FOR M.T.S.
KEUFFEL & ESSER
PLATE 3, CROSS SECTION
SHEET 397B OF 435

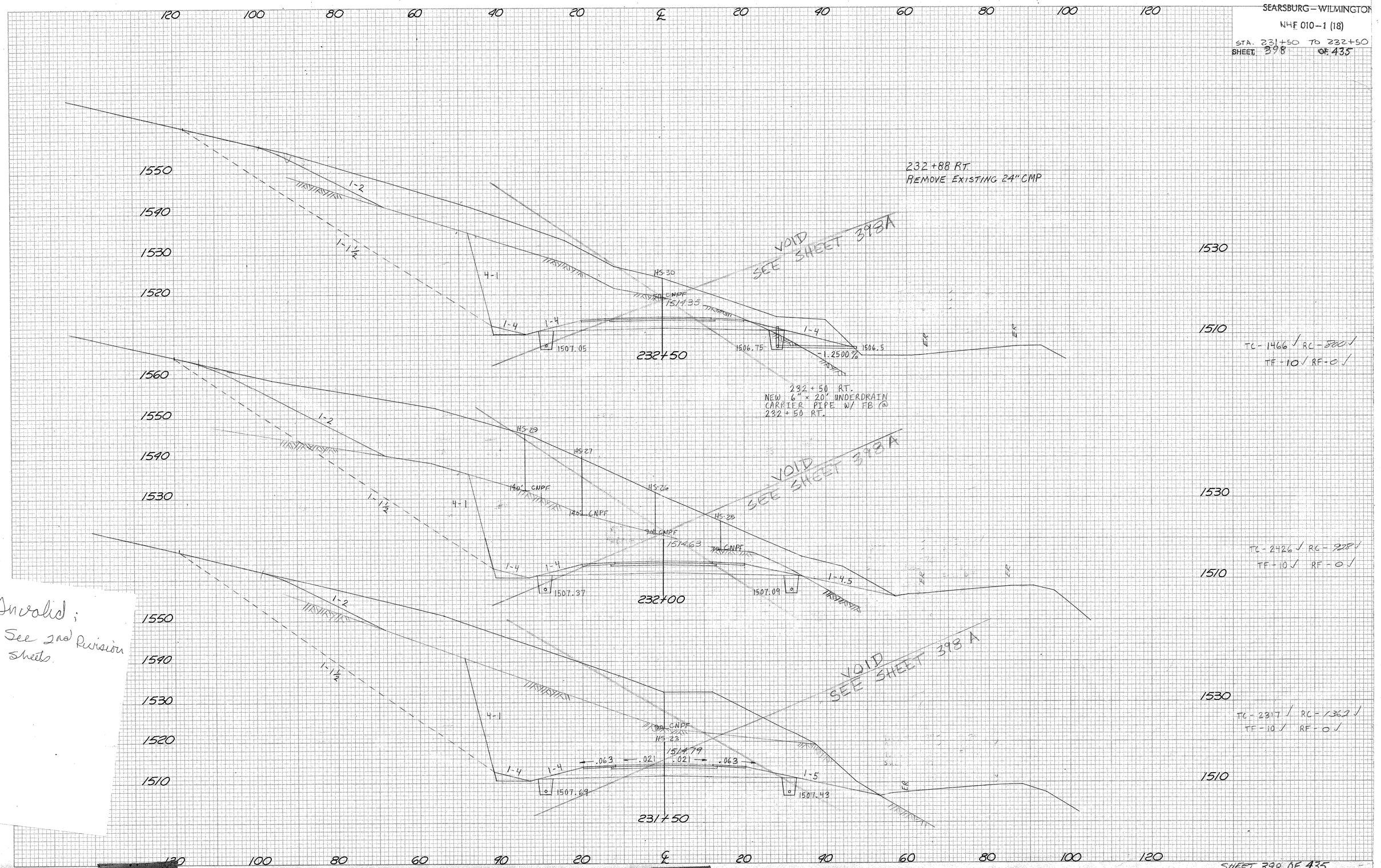
SEARSBURG – WILMINGTON
NHF 010-1 (18)
STA. 231+50 TO 232+50
SHEET 398 OF 435
232+88 RT.
REMOVE EXISTING 24" CMP
VOID
SEE SHEET 398A
HS-30
CNPF
1514.35
1507.05
232+50
1506.75
1506.5
-1.2500%
232+50 RT.
NEW 6" × 20' UNDERDRAIN
CARRIER PIPE W/ FB @
232+50 RT.
HS-29
HS-27
HS-26
HS-25
140' CNPF
1514.63
1507.37
232+00
1507.09
1-4.5
HS-23
1514.79
.063
.021
1507.69
1507.43
231+50
TC-1466 ✓ RC-800 ✓
TF-10 ✓ RF-0 ✓
TC-2426 ✓ RC-928 ✓
TF-10 ✓ RF-0 ✓
TC-2317 ✓ RC-1362 ✓
TF-10 ✓ RF-0 ✓
Invalid;
See 2nd Revision
Sheets.
SHEET 398 OF 435.
KEUFFEL & [redacted] SECTION

SEARSBURG – WILMINGTON
NHF 010-1 (18)
STA. 231+50 TO 232+50
SHEET 398 OF 435

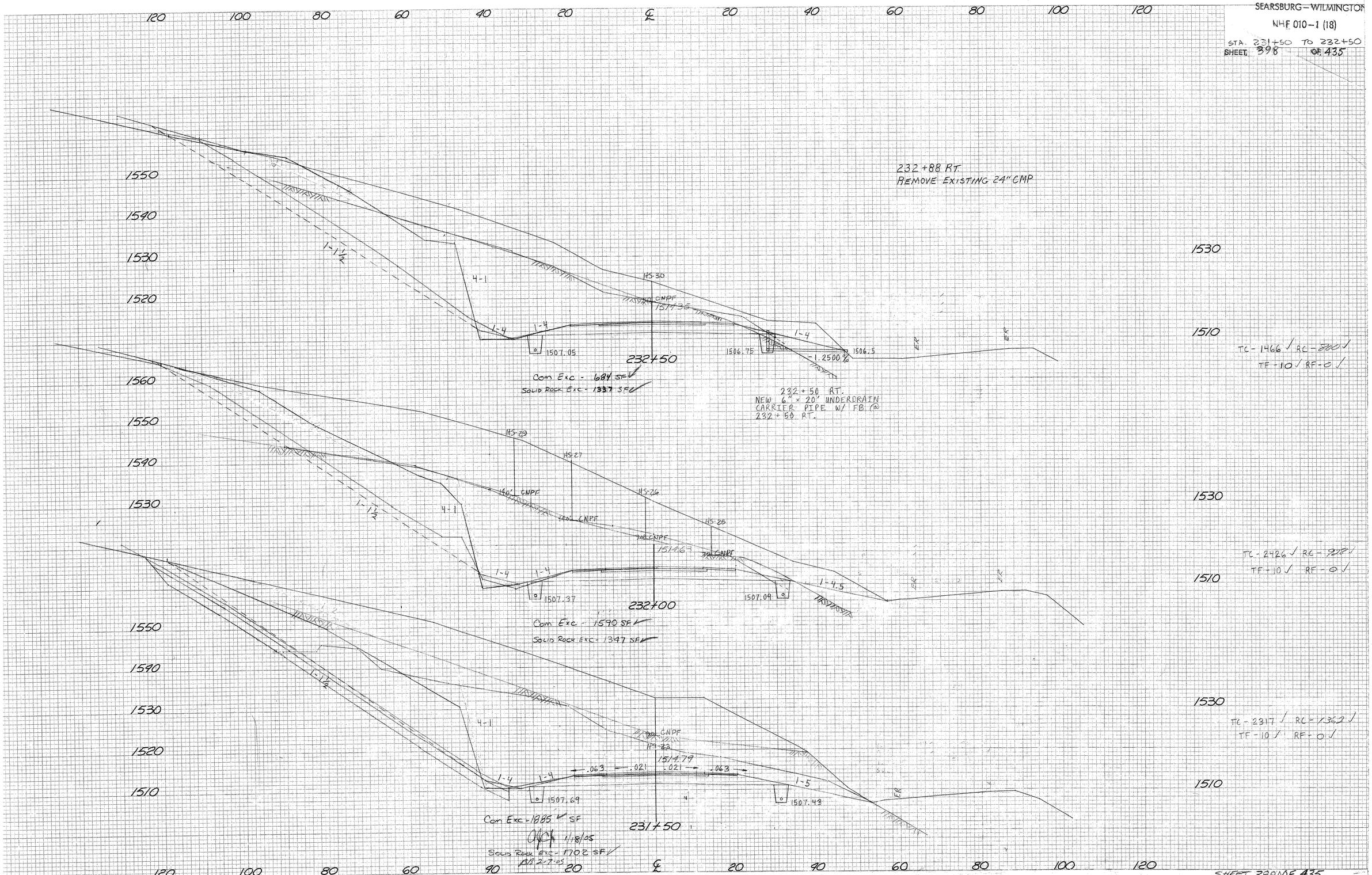

KEUFFEL & ESSER PLATE 3, CROSS SECTION
SHEET 398A OF 435

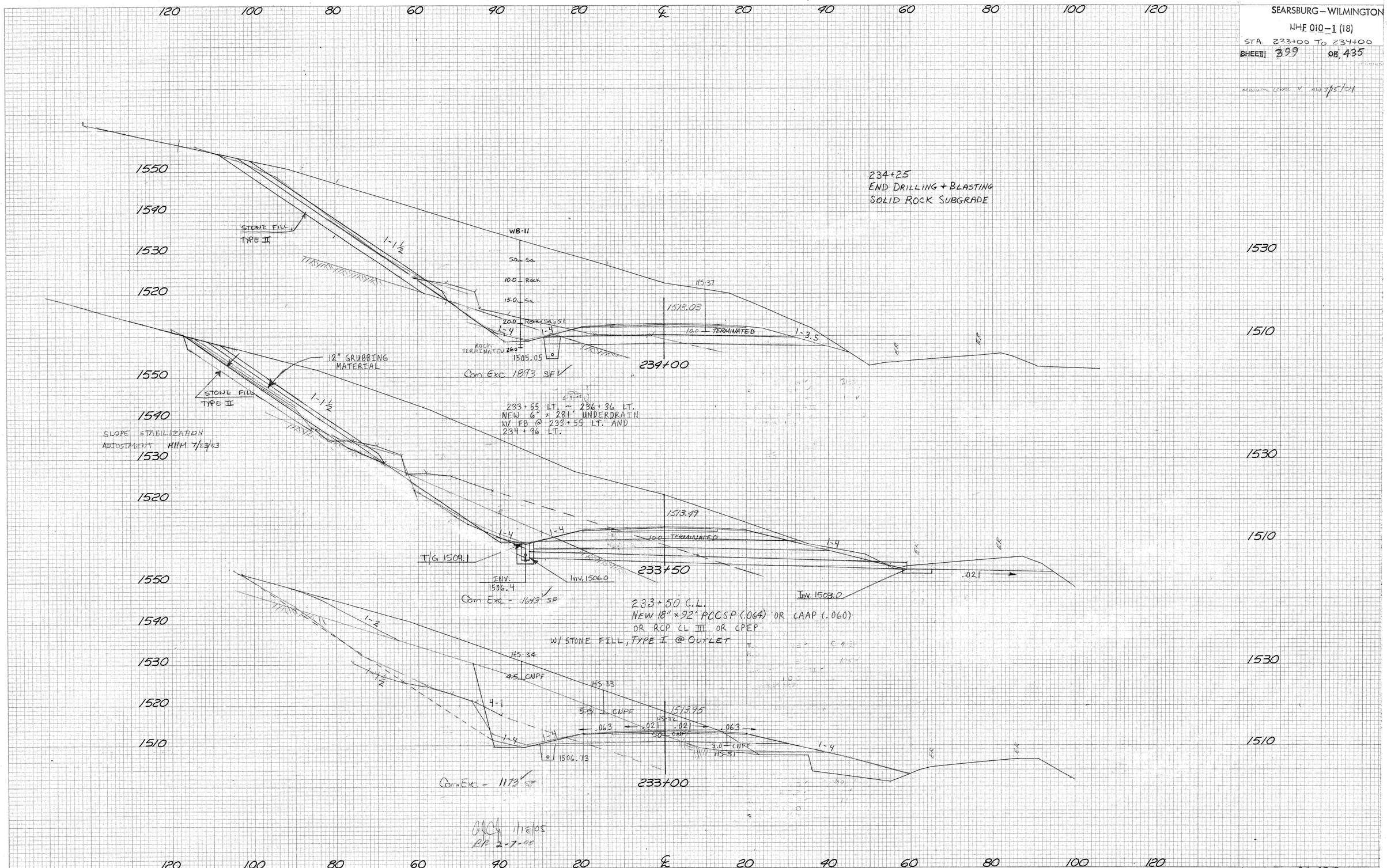
SEARSBURG – WILMINGTON
NHF 010-1 (18)
STA. 233+00 TO 234+00
SHEET 399 OF 435
234+25
END DRILLING + BLASTING
SOLID ROCK SUBGRADE
STONE FILL, TYPE II
1-1½
WB-11
5.0 Sa
10.0 Rock
15.0 Sa
20.0 Rock/Sa
1-4
ROCK TERMINATED 26.0
1505.05
Com Exc 1893 SF
HS-37
1513.03
10.0 TERMINATED
1-3.5
234+00
12" GRUBBING MATERIAL
233+55 LT. ~ 236+36 LT.
NEW 6" × 281' UNDERDRAIN
W/ FB @ 233+55 LT. AND
234+96 LT.
SLOPE STABILIZATION
ADJUSTMENT HHM 7/23/03
1513.49
T/G 1509.1
INV. 1506.4
Inv. 1506.0
233+50
Com Exc - 1643 SF
Inv. 1503.0
.021
233+50 C.L.
NEW 18" × 92' PCCSP (.064) OR CAAP (.060)
OR RCP CL III OR CPEP
W/ STONE FILL, TYPE I @ OUTLET
1-2
HS-34
4.5 CNPF
HS-33
5.5 CNPF
4-1
1513.95
.063
.021
3.0 CNPF
HS-31
1506.73
Com Exc - 1173 SF
233+00
1550
1540
1530
1520
1510
120
100
80
60
40
20
℄
SHEET 399 OF 435

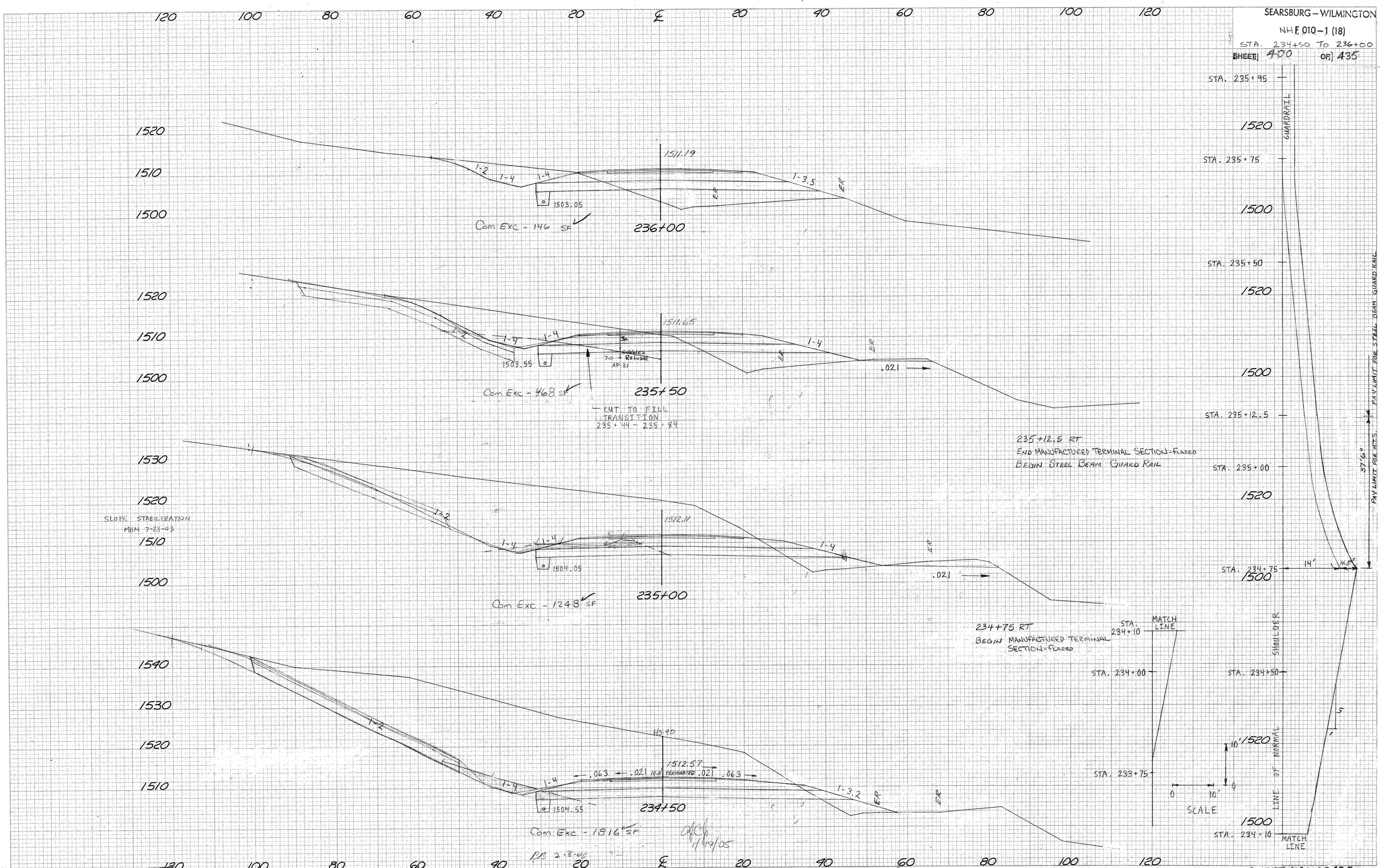
SEARSBURG – WILMINGTON
NH E 010-1 (18)
STA. 234+50 TO 236+00
SHEET 400 OF 435
1511.19
1503.05
Com Exc - 146 SF
236+00
1511.65
1503.55
Com Exc - 468 SF
235+50
CUT TO FILL TRANSITION 235+44 ~ 235+84
235+12.5 RT
END MANUFACTURED TERMINAL SECTION-FLARED
BEGIN STEEL BEAM GUARD RAIL
SLOPE STABILIZATION MHM 7-23-03
1512.11
1504.05
Com Exc - 1248 SF
235+00
234+75 RT
BEGIN MANUFACTURED TERMINAL SECTION-FLARED
1512.57
1504.55
Com Exc - 1816 SF
234+50
STA. 235+95
STA. 235+75
STA. 235+50
STA. 235+12.5
STA. 235+00
STA. 234+75
STA. 234+50
STA. 234+10
STA. 234+00
STA. 233+75
GUARDRAIL
PAY LIMIT FOR STEEL BEAM GUARD RAIL
PAY LIMIT FOR M.T.S.
37'6"
14'
SHOULDER
LINE OF NORMAL
MATCH LINE
SCALE
SHEET 400 OF 435

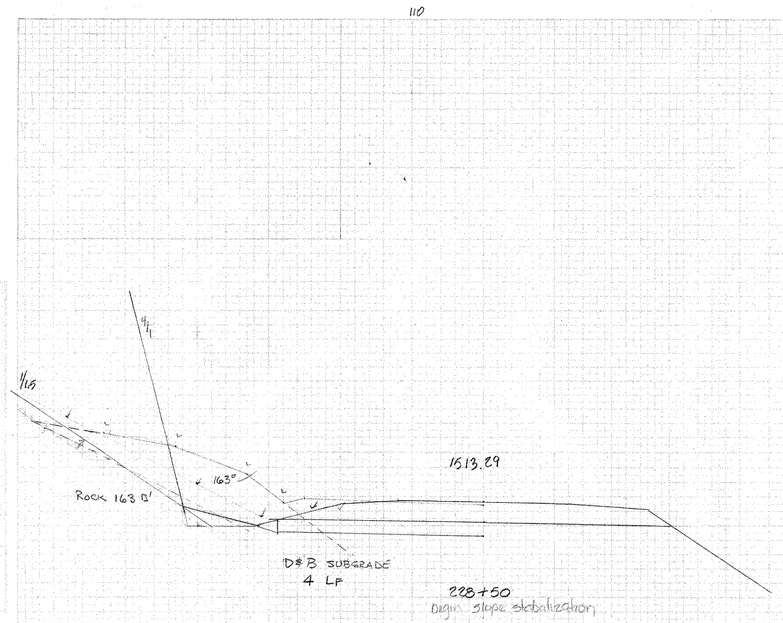

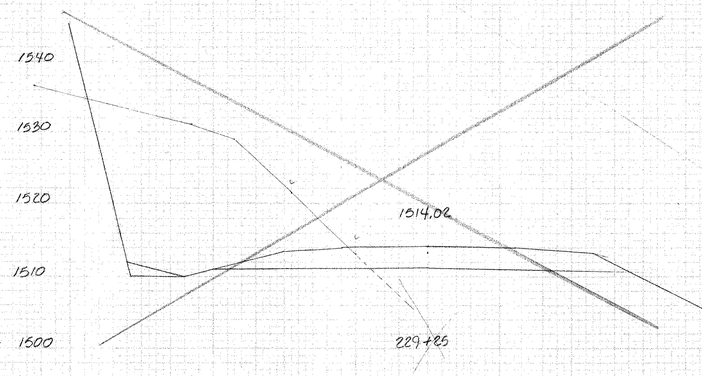

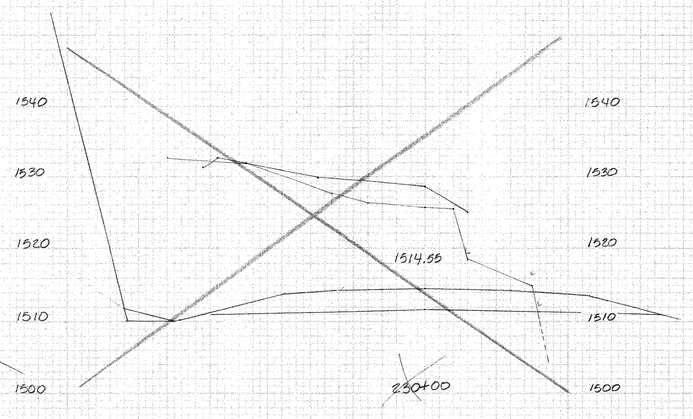

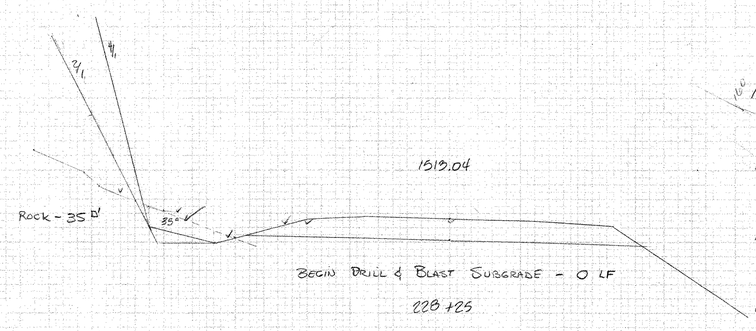

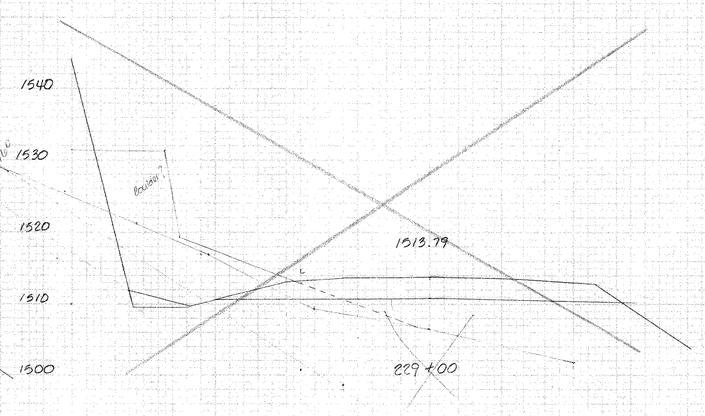

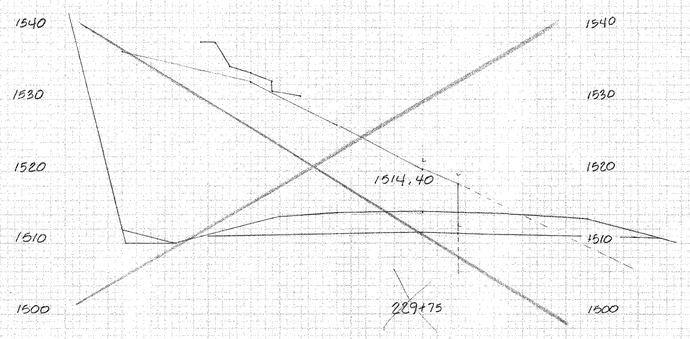

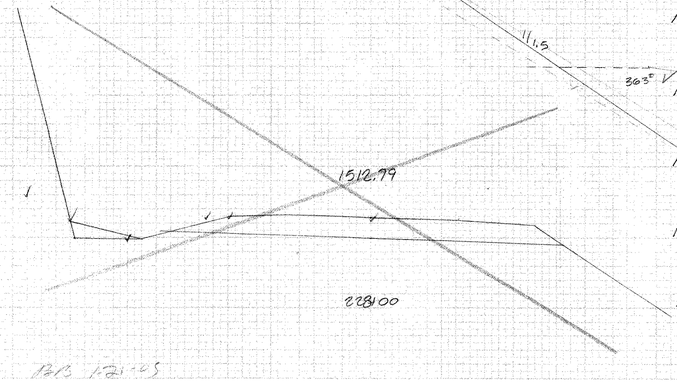

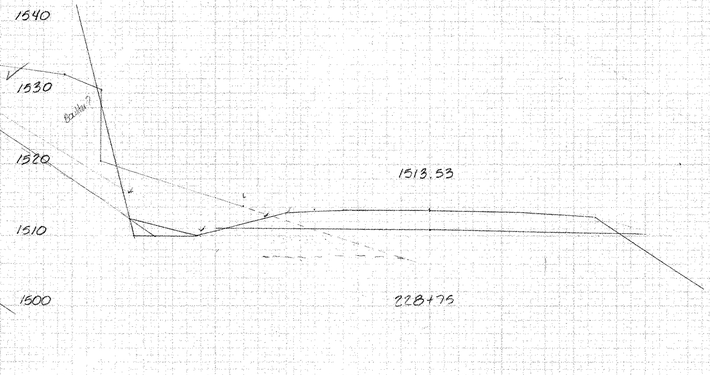

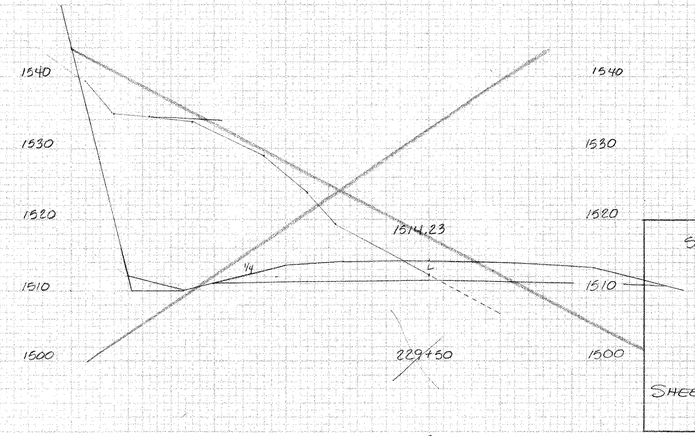

SEARSBURG - WILMINGTON
NH-F010-1(18)

Searsburg - Wilmington
Ledge

228+00 ~ 230+00
228+75

SHEET 400A OF 435

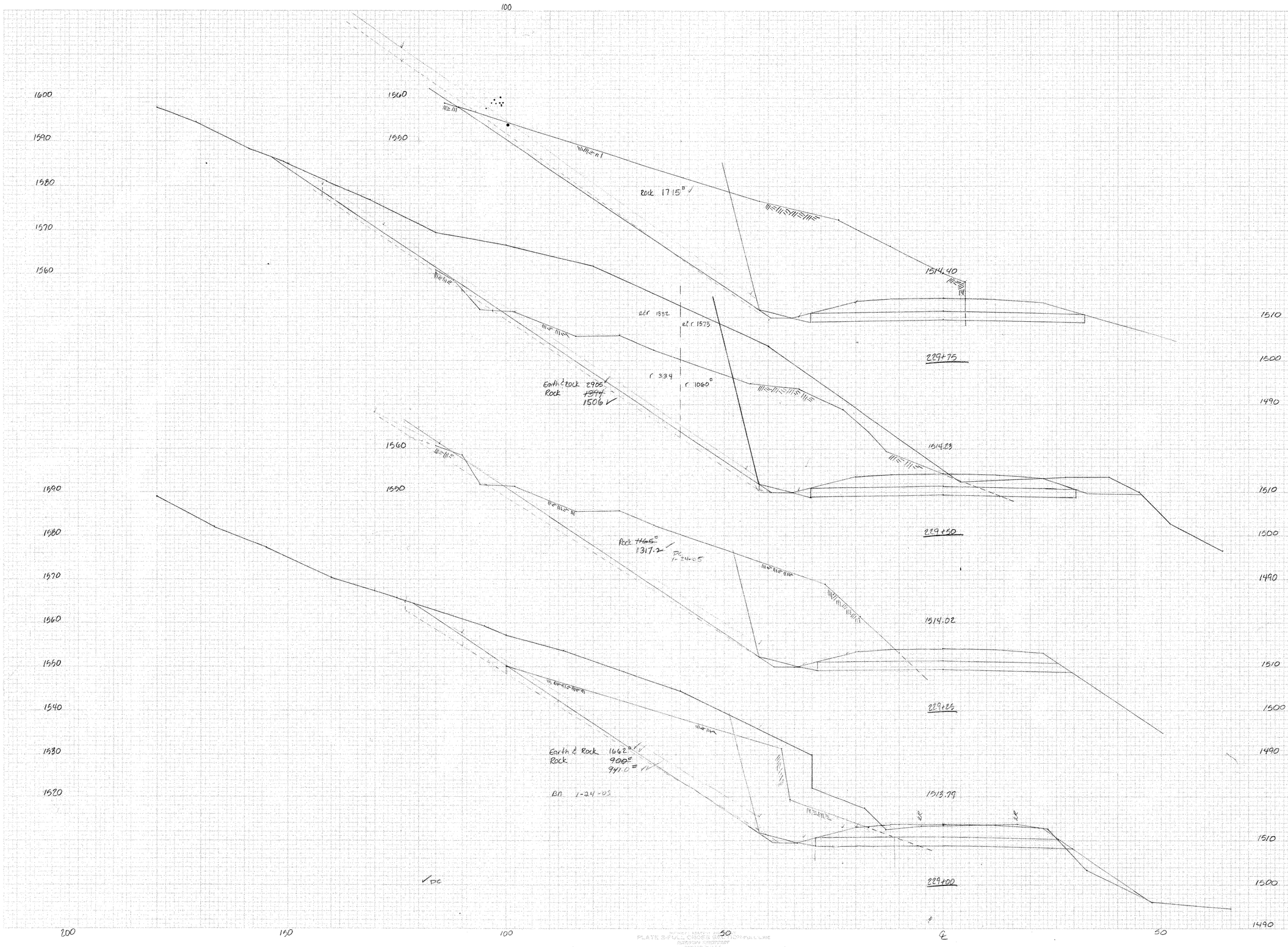

SEARSBURG - WILMINGTON
NH-F010-1(18)

Searsburg - Wilmington
Ledge
229+00 ~ 229+75 Re-Plotted 5/14/03

SHEET 400B OF 435

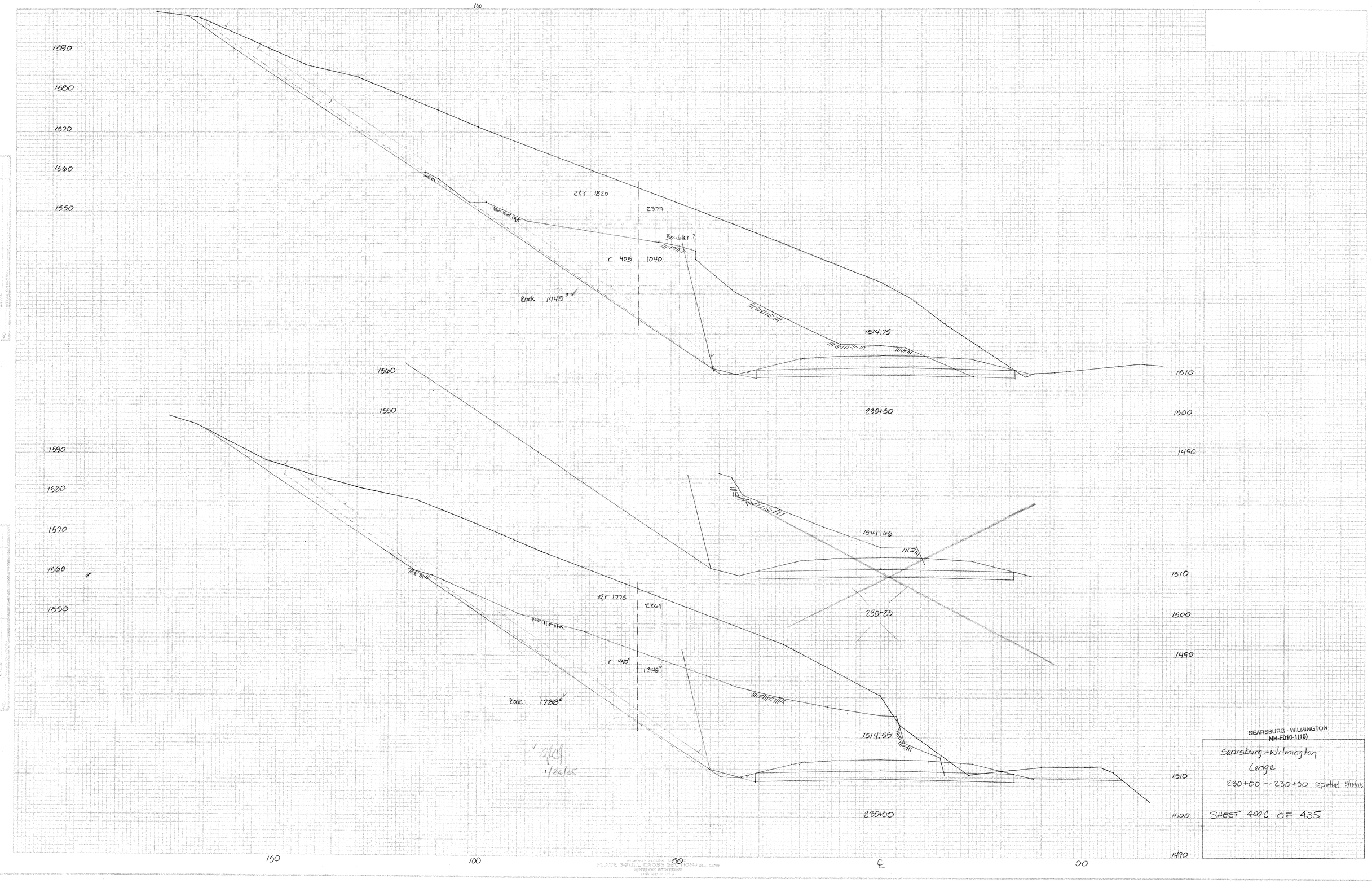

SEARSBURG - WILMINGTON
NH-F010-1(18)

Searsburg-Wilmington
Ledge
230+00 ~ 230+50 replotted 5/13/03

SHEET 400C OF 435

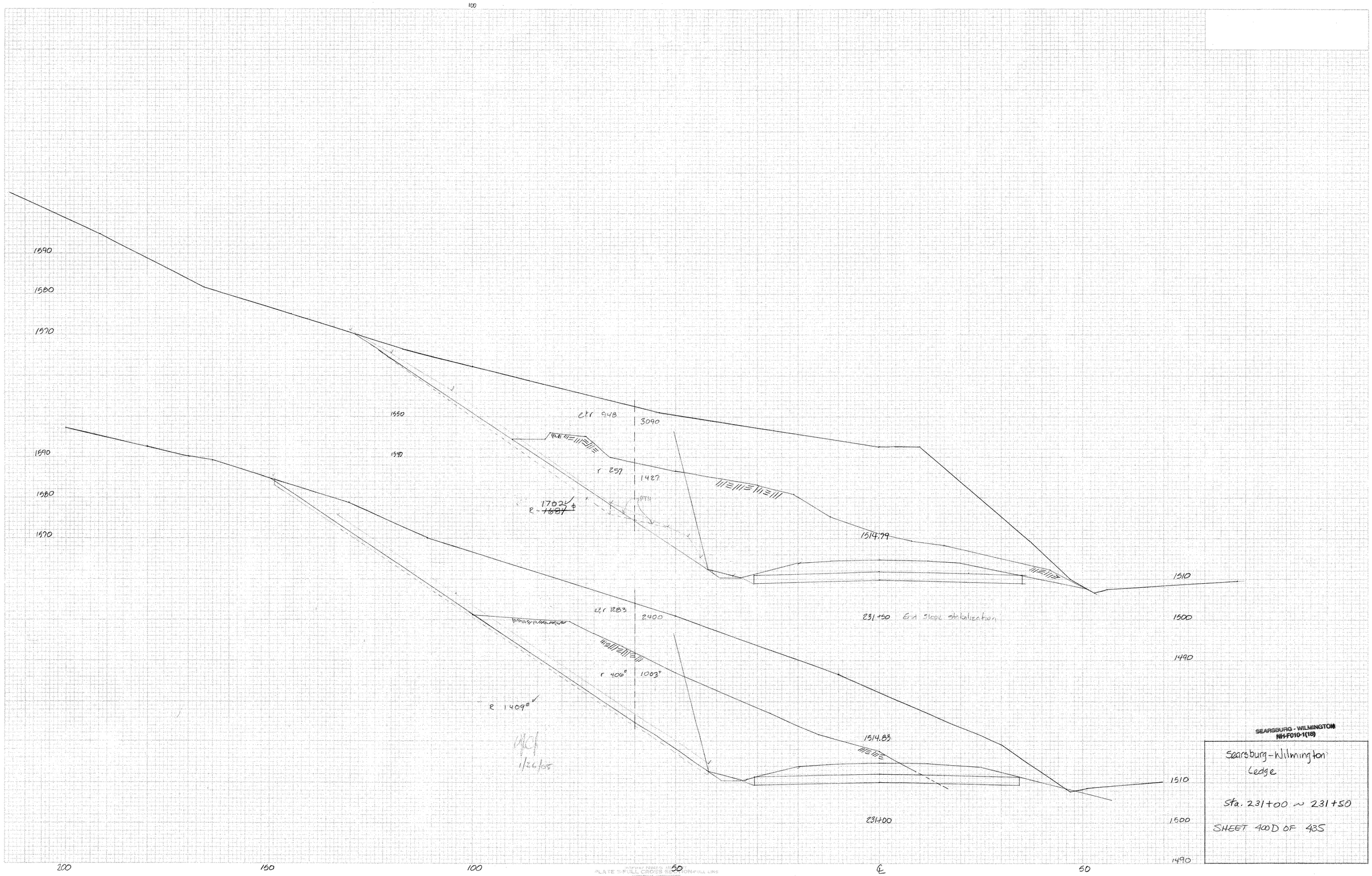

SEARSBURG - WILMINGTON
NH-F010-1(18)

Searsburg-Wilmington
Ledge

Sta. 231+00 ~ 231+50

SHEET 400D OF 435

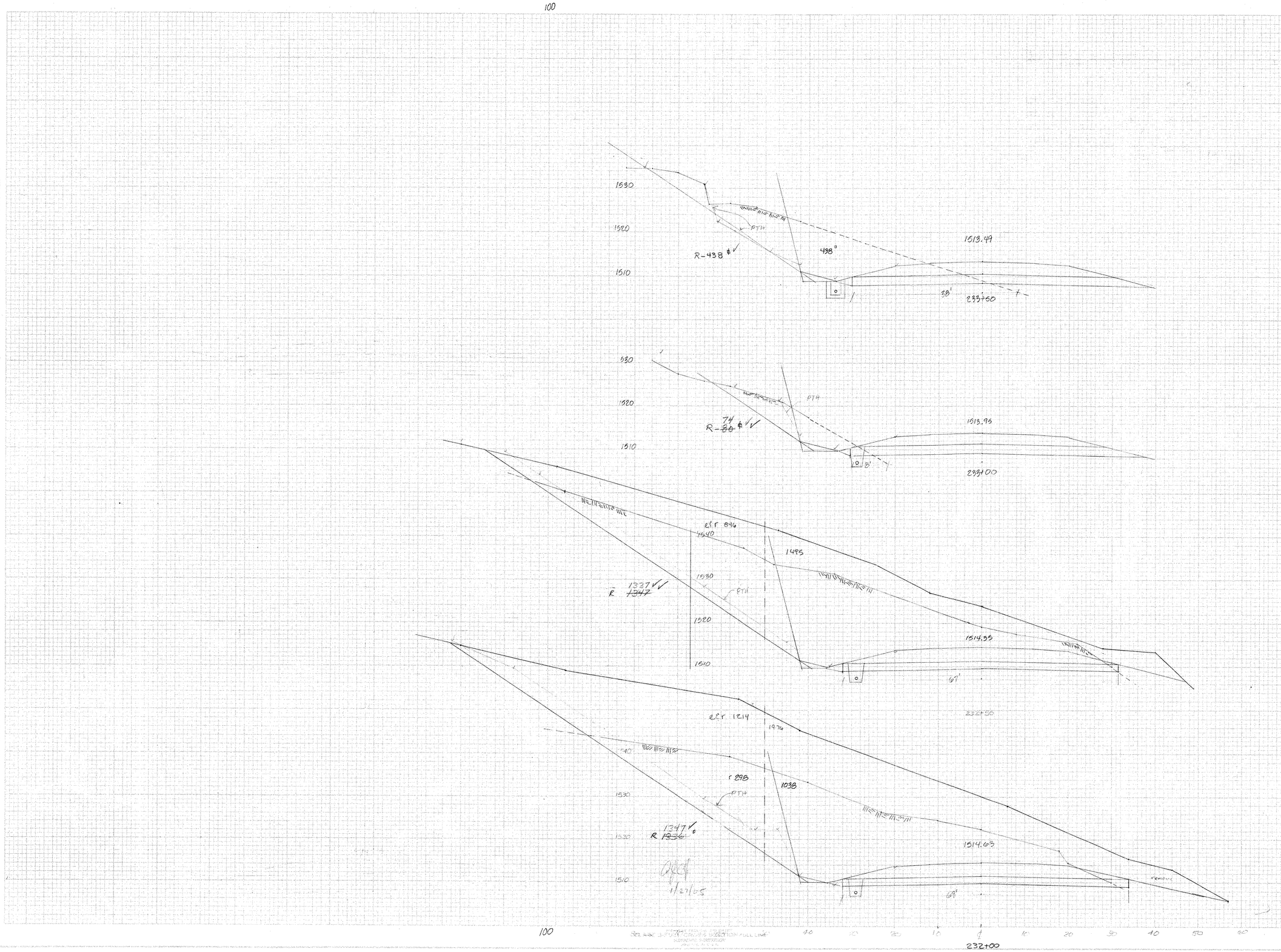

203.16 Solid Rock excavation

Sta	Area	Dist	Vol
228	0		
		25	16.2
+25	35		
		25	91.7
+50	163		
		25	243.5 ~~343.5~~
+75	363		
		25	603.7 ~~584.7~~
229	941 ~~900~~		
		25	1045.4 ~~956.0~~
+25	1317 ~~1165~~		
		25	1306.9 ~~1184.7~~
+50	1506 ~~1394~~		
		25	1491.2 ~~1439.4~~
+75	1715		
		25	1621.8
230	1788		
		50	2993.5
+25			
		50	2642.6
+50	1445		
		50	2880.6 ~~2863.9~~
+75			
231	1409		
		50	2823.1 ~~2796.3~~
+50	1702 ~~1684~~		
		50	2485.2 ~~2484.3~~
232	1347 ~~1336~~		
		50	1306.5 ~~1321.3~~
+50	1337 ~~1347~~		
		50	474.1 ~~479.6~~
233	74 ~~80~~		
		50	265.3 ~~262.0~~
+50	438		
		25	115.3 ~~107.4~~
+75	135 ~~128~~		
		25	132.4 ~~111.1~~
234	114 ~~104~~		
		25	95.8 ~~93.1~~
+25	172 ~~136~~		
		25	39.4
+50	35		
		25	37.0
+75	50		
		25	38.9
235	30		
		25	46.3
+25	54		
		25	21.3
+50	46		
			~~22,576.0 cy~~
+75	0		

Book 1 PAGE 71 22517.7 12/23/03

1/27/05

4-19-05

SEARSBURG - WILMINGTON
NH-F010-1(18)

SEARSBURG - WILMINGTON
LEDGE
232+00 - 233+50

SHEET 400E OF 435

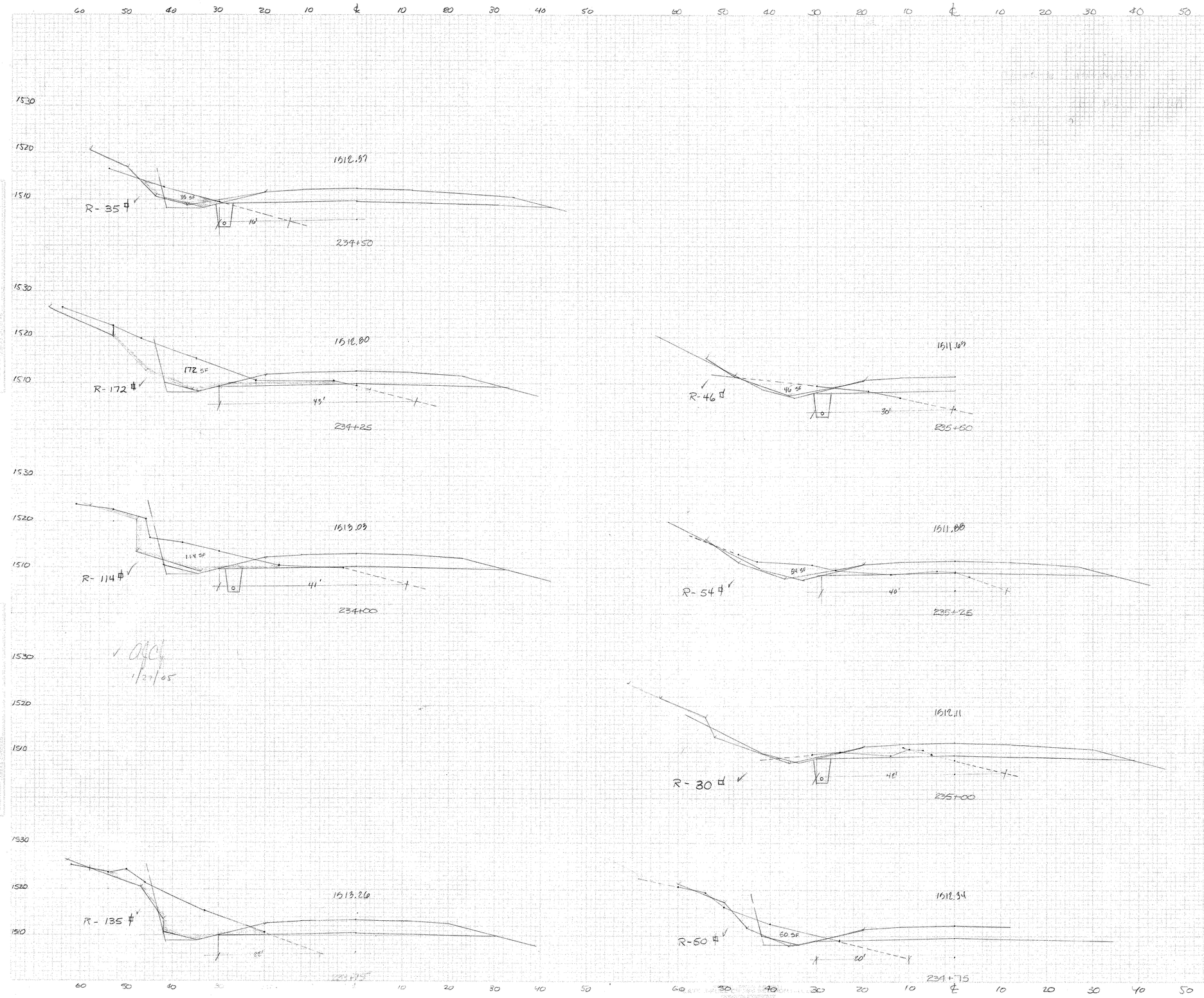

Item 205.20 Drilling & Blasting of Solid Rock Subgrade

Sta	Width	Dist	Area (SY)
228	0		
+25	0	25	~~35~~ 5.6
+50	4	25	~~22~~ 22.2
+75	12	25	~~42~~ 41.7
229	18	25	~~54~~ 54.2
+25	21	25	~~82~~ 81.9
+50	38	25	~~103~~ 102.8
+75	36	25	~~115~~ 115.3
230	47		
+25		50	~~267~~ 266.7
+50	49		
+75		50	250.0
231	41	50	~~294~~ 294.4
+50	65	50	~~372~~ 372.2
232	69	50	~~377~~ 377.8
+50	67	50	~~208~~ 208.3
233	8	50	~~127~~ 127.8
+50	38	25	~~83~~ 83.3
+75	22	25	~~89~~ 87.5
234	41	25	~~116~~ 116.7
+25	43	25	~~81~~ 81.9
+50	16	25	50.6
+75	20	25	~~86~~ 86.1
235	42	25	~~113~~ 113.9
+25	40	25	~~97~~ 97.2
+50	30	50	~~83~~ 83.3
236	0		
			3144 SY 12/23/03
			3120.8

Book 1A Page 59

CWG
ABC
4/23/04
M.W.H.
5/10/04

SEARSBURG - WILMINGTON
NH-F010-1(18)

Searsburg-Wilmington

LEDGE SECTIONS

233+75 ~ 235+50

SHEET 400F OF 435

SEARSBURG – WILMINGTON
NHF 010-1 (18)
STA. 236+50 To 238+00
SHEET 401 OF 435

Submitted V MW 2-4-05
Final V MW 2-4-05

FINAL SURVEY — NOTE BOOK — NO. — SURVEYED — PLOTTED — TEMPLATE — AREAS — AREAS CHECKED — BY — DATE

ORIGINAL SURVEY — NOTE BOOK — NO. — SURVEYED — PLOTTED — TEMPLATE — AREAS — AREAS CHECKED — BY — DATE

120 100 80 60 40 20 ℄ 20 40 60 80 100 120

1510 1500 1490

1509.87 .063 .021 .011 .057 1-4 1-1½ 12" GRUBBING MATERIAL .021 .068 .050 1-2 M.R.P. 1494.00
Com Exc - 61 SF
STONE TYPE IV MOD = 496 ⌗
30" CMPP
HP 2
238+00
GEO UNDER S.F = 82 LF
RP 4-8-05

1510.04 .063 .021 .005 .063 1-4 1-1½ 12" GRUBBING MATERIAL .028 .024 1-2 1-2
237+45 ± LT.
REMOVE EXISTING
2.5'x3' CONCRETE CULVERT
Com Exc - 15 SF
STONE TYPE IV MOD = 226 ⌗
237+50
GEO UNDER S.F = 66 LF
1512 4-8-05

237+32, 86' ± RT
BEGIN RELOCATION OVERFLOW CHANNEL (20' WIDE)
ELEV 1488.3 ±
M.R.P. 1494.00

1510.32 .063 .021 .015 .063 1-4 1-2
236+70 LT.
REMOVE EXISTING
15" CMP
Com Exc - 0 SF
STONE TYPE IV MOD = 126 ⌗
237+00
ELEV 1434.00
GEO UNDER S.F = 16 LF
RP 4-8-05

EQUALITY
P.C. 238+88.36
+0.021
237+76
0
RT. EDGE
AT. SHLDR.
℄
LT. & RT. EDGE -0.021
LT. & RT. SHLDR. -0.063
RT. SHLDR.
LT. SHLDR.
LT. EDGE & SHLDR.
M.R.P 1494.00

237+53
+0.063
P.C. 238+88.36 RT. AHEAD
P.C. 238+88.36 LT. AHEAD
+0.042

237 238 239 240

Sta. 236+62, Lt.
Construct Type B-1 (Paved)
Drive (14' wide)
Stone Wall
3:1 ± 1-8 14' 1-7 DITCH GRADE ⇒ MATCHES TO ROADWAY SIDE SLOPE
DRIVEWAY SECTION
236+62, 40' LT.
STONE TYPE IV MOD = 92 ⌗
DC 3-10-05

1510.73 .063 .021 .021 .063 3% 1-4 1-4 1-2 T.G. 1506.6 INV. 1502.7 INV. 1502.2 12" SAND BORROW 12" GRUBBING MATERIAL 1501.1
Com Exc - 28 SF
DC 1-19-05
RP 2-8-05
RP 3-14-05
236+36 C.L.
NEW 18"x 72" PCCSP (.064) OR CAAP (.060) OR CPEP (SL)
16'
STONE FILL, TYPE IV (MOD.) (SELECTED BLASTED LEDGE FROM PROJECT)

* KEYWAY EXC. PAID AS 203.27 - UNCL. CHAN EXC. SEE WRITTEN ORDER # 60 STA 236+05 - 245+0

BANKING TRANSITION
Scale:
1" = 50' Horiz.
1" = 0.05' Vert.
D = 4°30' LT
BANK = 0.063'/FT.

MAXIMUM REGULATED POOL 1497.0
GEO UNDER S.F = 16 LF
DC 3-10-05
RP 7-8-05

120 100 80 60 40 20 ℄ 20 40 60 80 100 120

SCOTTSBURG – WILMINGTON
NHF 010-1 (18)
STA. 238+50 TO 239+50
SHEET 402 OF 435

120 100 80 60 40 20 ℄ 20 40 60 80 100 120

1510.04
.063 .063 .010
1500
1490
1480
NOT REMOVED
.040
EXIST
1-6
Com Exc - 0 SF ✓
STONE TYPE III MOD = 744 TN ✓
12" GRUBBING MATERIAL
1-1 1/2
1-2
GEO UNDER S.F = 114 LF ✓
RIP 4-3-05
M.R.P 1494.00
239+50
CAPP 1.5
HP-3
7.0 Wet Cobbles
10.0 Terminated
AP-33

To 239+25 LT
Construct Type A-1 (Gravel)
Drive 16 wide
Remove Existing 18" CMP
3%
3%
1-5
1500

239+29
DRIVEWAY - LT.
1509.87
16'
1-3
1-4
DRIVEWAY SECTION
239+25, 65' LT.

.063 .049 .049 .016
1500
1490
1480
EXIST
1-4
NOT REMOVED
.042
ELEV 1494.00
1-1 1/2
1-2.5
GEO UNDER S.F = 106 LF ✓
RIP 4-8-05
M.R.P 1494.00
1-2
SEE CHANNEL SECTIONS FOR THIS AREA.
MHM 1/19/05
239+00

Com Exc - 0 SF ✓
STONE TYPE III MOD = 682 TN ✓

238+92 LT ~ 239+56 LT
NEW 36" x 64' CSP (.079) OR RCP CL III
OR CPEP (SL)

238+76.24 BK = 238+83.41 AHD.
EQ = -7.17'

1509.82
.063 .031 .031 .038
1500
1490
1480
EXIST
1-4
.050
Inv. 1495.7
12" SAND BORROW
12" GRUBBING MATERIAL
12" SAND BORROW
1-1 1/2
1-2
M.R.P 1494.00
Inv. 1490.5
GEO UNDER S.F = 95 LF ✓
DC 3-9-05
RIP 4-8-05
238+50

Com Exc - 117 SF ✓
STONE TYPE III MOD = 601 TN ✓
DC
3-10-05
1/19/05
2-17-05
3-10-05

238+30 LT
REMOVE EXISTING
8" CMP

238+50 C.L
NEW 48" x 112' PCCSP (.109) OR CAAP (.105)
W/CSPES OR CAAPES
+STONE FILL, TYPE II @ INLET

* KEYWAY EXC PAID AS
203.27 - UNCL. CHAN EXC.
SEE WRITTEN ORDER # 60
236+25 ~ 295+0

120 100 80 60 40 20 ℄ 20 40 60 80 100 120

SHEET 402 OF 435

FINAL SURVEY — NOTE BOOK — NO. — SURVEYED — PLOTTED — TEMPLATE — AREAS — AREAS CHECKED — BY — DATE
ORIGINAL SURVEY — NOTE BOOK — NO. — SURVEYED — PLOTTED — TEMPLATE — AREAS — AREAS CHECKED — BY — DATE

SEARSBURG – WILMINGTON
NHF 010-1 (18)
STA 240+00 TO 241+00
SHEET 403 OF 435

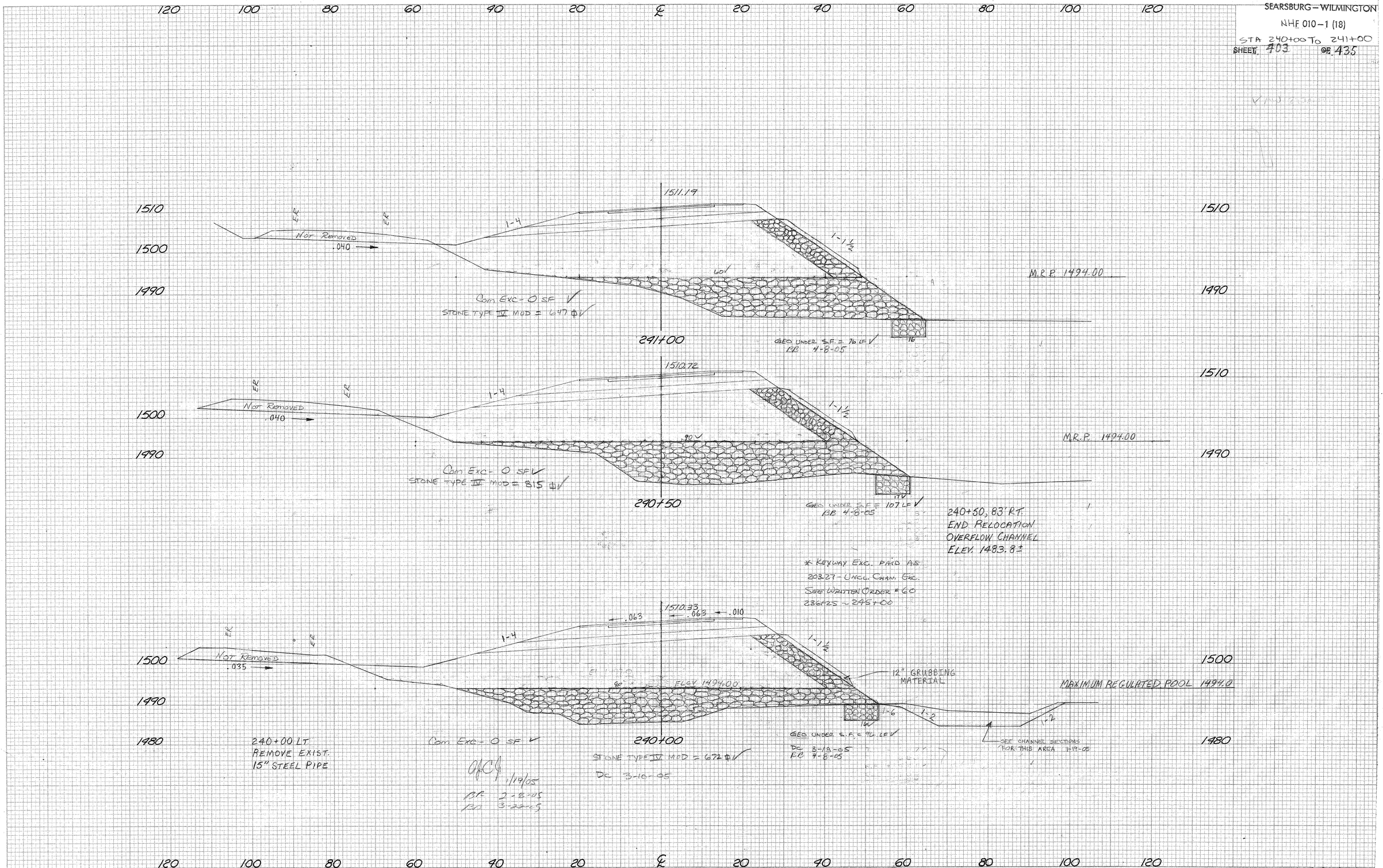

FINAL SURVEY — NOTE BOOK NO. — SURVEYED — PLOTTED — TEMPLATE — AREAS — AREAS CHECKED — BY — DATE

ORIGINAL SURVEY — NOTE BOOK NO. — SURVEYED — PLOTTED — TEMPLATE — AREAS — AREAS CHECKED — BY — DATE

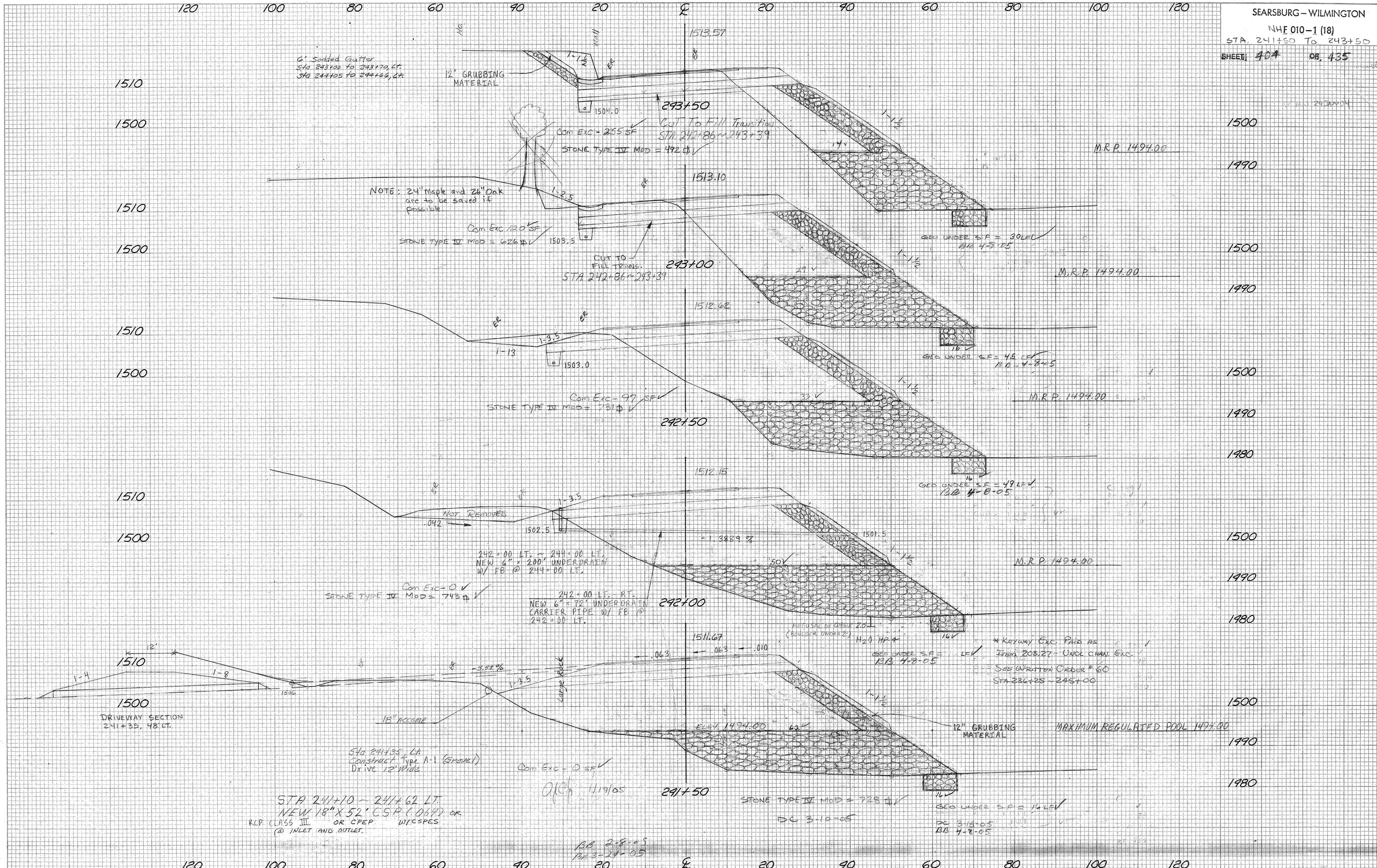
SEARSBURG – WILMINGTON
NHF 010-1 (18)
STA. 241+50 To 243+50
SHEET 404 OF 435
6' Sodded Gutter
Sta 243+00 to 243+70, Lt.
Sta 244+05 to 244+66, Lt.
12" GRUBBING MATERIAL
1513.57
293+50
Cut To Fill Transition
STA. 242+86 ~ 243+39
Com Exc = 255 SF
STONE TYPE IV MOD = 492 ⌀
M.R.P. 1494.00
NOTE: 24" Maple and 26" Oak are to be saved if possible
1513.10
Com Exc 120 SF
STONE TYPE IV MOD = 626 ⌀
CUT TO FILL TRANS.
STA. 242+86 ~ 243+39
293+00
GEO UNDER S.F. = 30 LF
BB 4-8-05
1512.62
1-13
1503.0
GEO UNDER S.F. = 45 LF
BB 4-8-05
Com Exc - 97 SF
STONE TYPE IV MOD = 731 ⌀
292+50
GEO UNDER S.F. = 49 LF
BB 4-8-05
1512.15
NOT REMOVED
.042
1502.5
1501.5
-1.3889 %
242+00 LT. ~ 244+00 LT.
NEW 6" x 200' UNDERDRAIN
W/ FB @ 244+00 LT.
Com Exc - 0
STONE TYPE IV MOD = 743 ⌀
242+00 LT. - RT.
NEW 6" x 72' UNDERDRAIN
CARRIER PIPE W/ FB @
242+00 LT.
292+00
H2O HP 4
GEO UNDER S.F. = LF
BB 4-8-05
* Keyway Exc. Paid as Item 208.27 - Uncl. Chan. Exc.
See Written Order # 60
STA. 236+25 ~ 245+00
1511.67
.063
.010
-5.5±%
Large Rock
DRIVEWAY SECTION
241+35, 48' LT.
18" Accomp
ELEV. 1494.00
12" GRUBBING MATERIAL
MAXIMUM REGULATED POOL 1494.00
Sta 241+35, Lt.
Construct Type A-1 (Gravel)
Drive 12' Wide
Com Exc - 0 SF
STA 241+10 ~ 241+62 LT.
NEW 18" X 52' CSP (.064) OR
RCP CLASS III OR CPEP W/CSPES
@ INLET AND OUTLET.
291+50
STONE TYPE IV MOD = 728 ⌀
DC 3-10-05
GEO UNDER S.F. = 16 LF
DC 3-18-05
BB 4-8-05
BB 2-8-05
BB 3-24-05
SHEET 404 OF 435

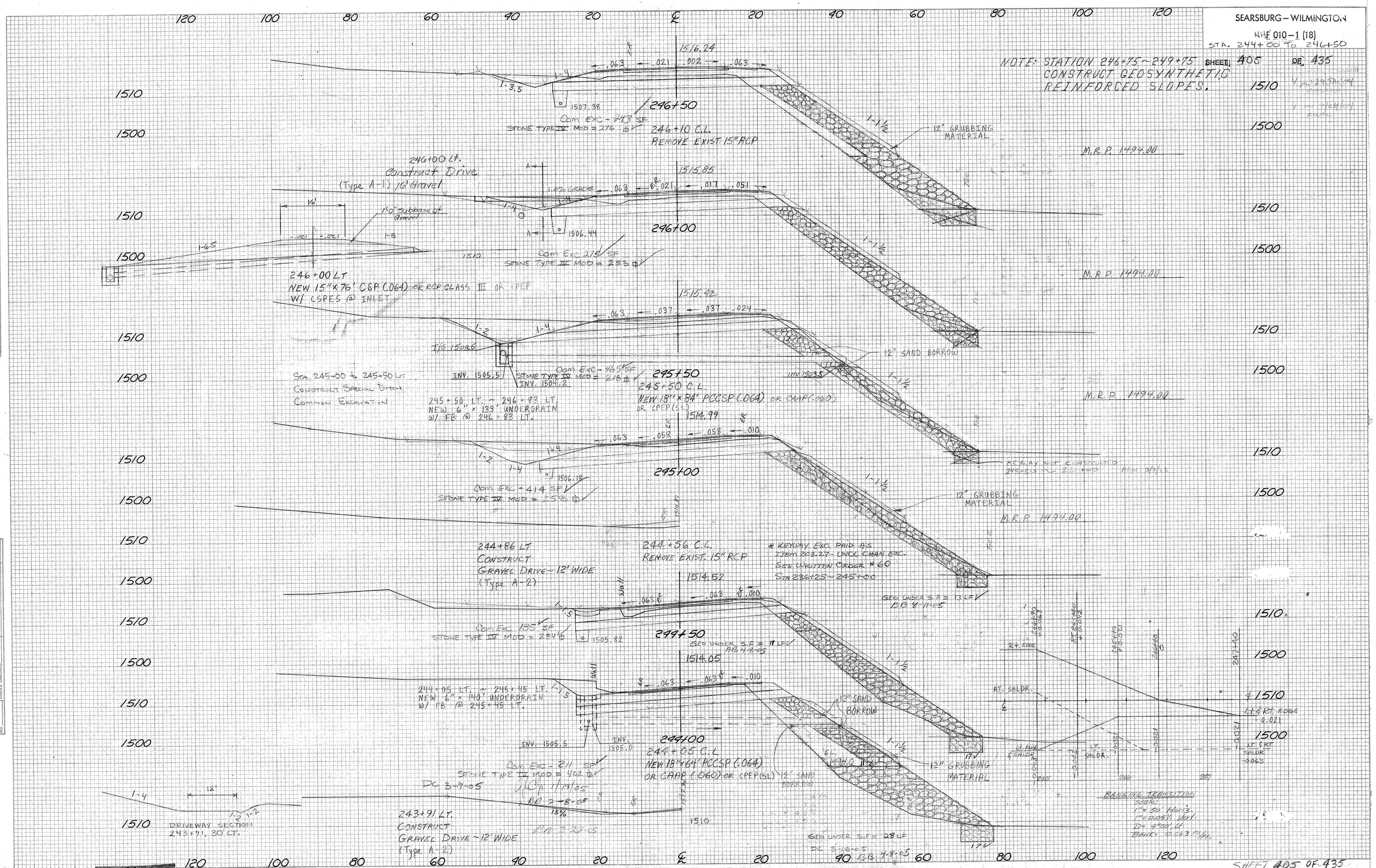
SEARSBURG – WILMINGTON
NHF 010-1 (18)
STA. 244+00 TO 246+50
SHEET 405 OF 435
NOTE: STATION 246+75 ~ 249+75 CONSTRUCT GEOSYNTHETIC REINFORCED SLOPES.
1516.24
246+50
Com EXC - 243 SF
STONE TYPE IV MOD = 276
246+10 C.L.
REMOVE EXIST. 15" RCP
12" GRUBBING MATERIAL
M.R.P. 1494.00
246+00 Lt.
Construct Drive
(Type A-1) 16' Gravel
1515.85
246+00
Com Exc 275 SF
STONE TYPE IV MOD = 253
246+00 LT
NEW 15" x 76' CSP (.064) OR RCP CLASS III OR CPEP
W/ CSPES @ INLET
1515.42
12" SAND BORROW
245+50
245+50 C.L.
NEW 18" x 84' PCCSP (.064) OR CAAP (.060)
OR CPEP (SL)
Com EXC - 465 SF
STONE TYPE IV MOD = 218
INV. 1505.5
INV. 1504.2
Sta. 245+00 to 245+50 Lt
Construct Special Ditch
Common Excavation
245+50 LT. ~ 246+83 LT.
NEW 6" x 133' UNDERDRAIN
W/ FB @ 246+83 LT.
1514.99
245+00
Com EXC - 414 SF
STONE TYPE IV MOD = 258
KEYWAY NOT CONSTRUCTED
244+86 LT
CONSTRUCT
GRAVEL DRIVE ~ 12' WIDE
(Type A-2)
244+56 C.L.
REMOVE EXIST. 15" RCP
* KEYWAY EXC. PAID AS ITEM 203.27 - UNCL CHAN EXC.
SEE WRITTEN ORDER #60
STA 236+25 ~ 245+00
1514.52
GEO UNDER S.F. = 13 LF
Com Exc 185 SF
STONE TYPE IV MOD = 284
244+50
GEO UNDER S.F. = 11 LF
1514.05
244+05 LT. ~ 245+45 LT.
NEW 6" x 140' UNDERDRAIN
W/ FB @ 245+45 LT.
12" SAND BORROW
244+00
244+05 C.L.
NEW 18" x 64' PCCSP (.064)
OR CAAP (.060) OR CPEP (SL)
Com Exc - 211 SF
STONE TYPE IV MOD = 402
DC 3-9-05
243+91 LT.
CONSTRUCT
GRAVEL DRIVE ~ 12' WIDE
(Type A-2)
DRIVEWAY SECTION
243+91, 30' LT.
GEO UNDER S.F. = 28 LF
RT. SHLDR.
LT. SHLDR.
BANKING TRANSITION
Scale:
1" = 50' Horiz.
1" = 0.05' Vert.
D = 4°00' Lt.
Bank = 0.063 Ft/Ft.
SHEET 405 OF 435

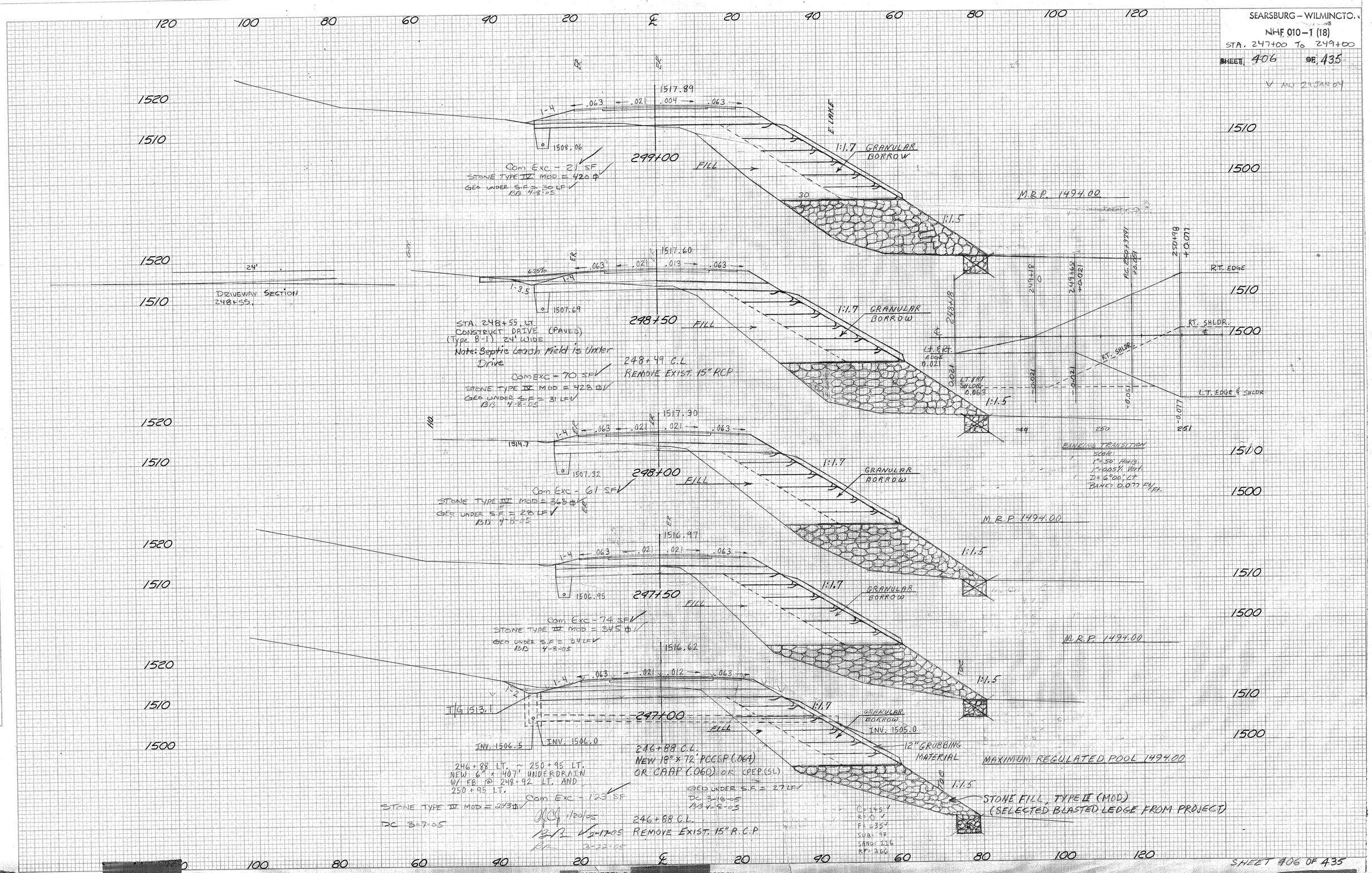
SEARSBURG – WILMINGTON
NHF 010-1 (18)
STA. 247+00 To 249+00
SHEET 406 OF 435
1517.89
1508.06
Com Exc - 21 SF
STONE TYPE IV MOD = 420 ⌀
GEO UNDER S.F = 30 LF
BB 4-8-05
299+00
FILL
1:1.7 GRANULAR BORROW
M.R.P. 1494.00
1:1.5
1517.60
1507.69
STA. 248+55, LT.
CONSTRUCT DRIVE (PAVED)
(Type B-1) 24' WIDE
Note: Septic Leach Field is Under Drive
248+50
248+49 C.L.
REMOVE EXIST. 15" RCP
Com Exc - 70 SF
STONE TYPE IV MOD = 428 ⌀
GEO UNDER S.F = 31 LF
BB 4-8-05
DRIVEWAY SECTION
248+55
24'
RT. EDGE
RT. SHLDR.
LT. EDGE & SHLDR.
BANKING TRANSITION
1517.30
1514.7
1507.32
248+00
Com Exc - 61 SF
STONE TYPE IV MOD = 363 ⌀
GEO UNDER S.F = 28 LF
BB 4-8-05
M.R.P. 1494.00
1516.97
1506.95
247+50
Com Exc - 74 SF
STONE TYPE IV MOD = 345 ⌀
GEO UNDER S.F = 34 LF
BB 4-8-05
M.R.P. 1494.00
1516.62
T/G 1513.1
247+00
INV. 1506.5
INV. 1506.0
INV. 1505.0
12" GRUBBING MATERIAL
MAXIMUM REGULATED POOL 1494.00
246+88 C.L.
NEW 18" x 72' PCCSP (.064)
OR CAAP (.060) OR CPEP (SL)
246+88 LT. ~ 250+95 LT.
NEW 6" x 407' UNDERDRAIN
W/ FB @ 248+92 LT. AND
250+95 LT.
Com Exc - 123 SF
STONE TYPE IV MOD = 243 ⌀
DC 3-9-05
GEO UNDER S.F = 27 LF
DC 3-18-05
BB 4-8-05
246+88 C.L.
REMOVE EXIST. 15" R.C.P.
STONE FILL, TYPE II (MOD)
(SELECTED BLASTED LEDGE FROM PROJECT)
C = 145
R = 0
F = 635
SUB = 97
SAND = 116
RF = 266
SHEET 406 OF 435

SEARSBURG – WILMINGTON
NHF 010-1 (18)
STA. 249+50 TO 251+00
SHEET 907 OF 435

120 100 80 60 40 20 ℄ 20 40 60 80 100 120

1530 1520 1510 1540 1530 1520 1510 1530 1520 1510 1500 1490

1990 1510 1990 1510 1490 1510

1518.90 .077 .077 .010 1-4 1-1½ 1-1½ 12" GRUBBING MATERIAL
T/G 1516.0 INV. 1508.7 INV. 1509.2 180' TERMINATE AP-34 INV. 1508.0
FR ER E. LAKE
251+00

251+00 ± ~ 251+75 ±
WHERE NECESSARY, SIDE SLOPE RATES SHOULD BE MODIFIED TO CATCH TOP OF EXISTING BANK TO AVOID ENCROACHMENT INTO THE DEERFIELD RIVER AND DAMAGE TO EXISTING VEGETATION.

250+80 LT
REMOVE EXIST. 12" CMP

251+00 LT. ~ 253+45 LT.
NEW 6" x 245' UNDERDRAIN W/ FB @ 253+45 LT.

Com Exc - 105 SF
STONE TYPE IV MOD = 314 TN

251+00 C.L
NEW 18" x 84' PCCSP (.064) OR CAAP (.060) OR RCP CLASS III OR CPEP (SL) W/ STONE FILL, TYPE I @ OUTLET

1518.65 .063 .056 .056 .012 1-4 1-2 1-1½
1509.17
FR ER E. LAKE
250+50

Com Exc - 83 SF
STONE TYPE IV MOD = 220 TN

1518.40 .063 .034 .034 .034 1-4 1-2 1-1½
1508.8
FR ER E. LAKE
250+00

Sta. 249+70 to 251+50 LT
Special Ditch
Common Excavation

Com Exc - 125 SF
STONE TYPE IV MOD = 243 TN

M.R.P. 1494.00

1518.15 .063 .021 .014 .056 1-4
1508.43
FR
249+50

GRANULAR BORROW
1:1.7
12" GRUBBING MATERIAL
FILL
M.R.P 1494.00
1:1.5

Com Exc - 0 SF
1/20/05
STONE TYPE IV MOD = 446 TN

DC 3-9-05
RJB 2-17-05
[illegible] 3-21-05

GEO LINER S.F. = 35 LF
DC 3-18-05

E. LAKE

120 100 80 60 40 20 ℄ 20 40 60 80 100 120

SECTION

SHEET 907 OF 435

SURVEYED
PLOTTED
TEMPLATE
AREAS
AREAS CHECKED
NOTE BOOK
NO.
BY
DATE
FINAL SURVEY
ORIGINAL SURVEY

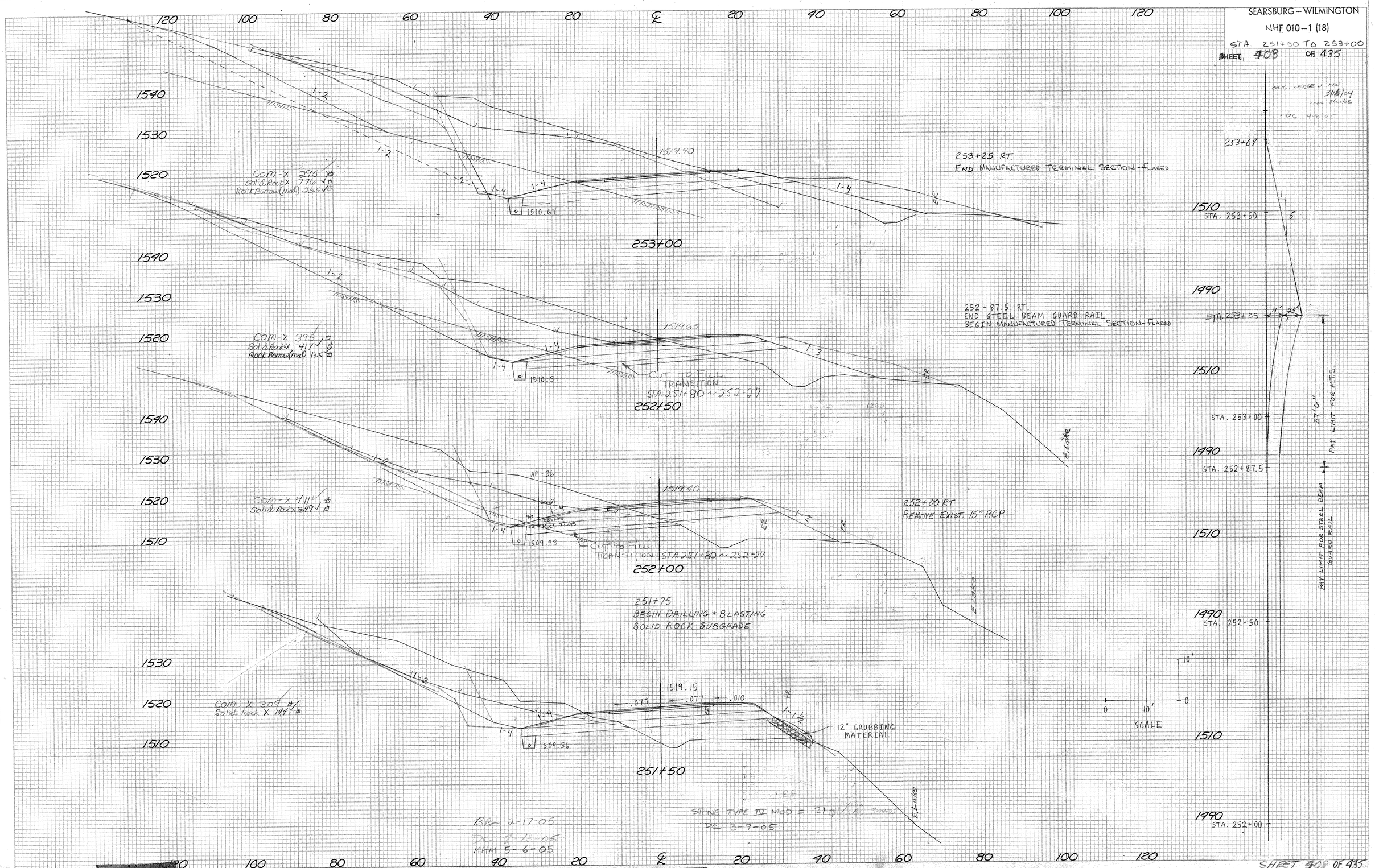
SEARSBURG – WILMINGTON
NHF 010-1 (18)
STA. 251+50 TO 253+00
SHEET 408 OF 435
253+25 RT
END MANUFACTURED TERMINAL SECTION - FLARED
COM-X 295
Solid Rock X 796
Rock Borrow (mod) 26.5
1519.90
1510.67
253+00
252+87.5 RT.
END STEEL BEAM GUARD RAIL
BEGIN MANUFACTURED TERMINAL SECTION - FLARED
COM-X 395
Solid Rock X 417
Rock Borrow (mod) 13.5
1519.65
1510.3
CUT TO FILL TRANSITION
STA 251+80 ~ 252+27
252+50
COM-X 411
Solid Rock X 249
1519.40
1509.93
252+00 RT
REMOVE EXIST. 15" RCP
CUT TO FILL TRANSITION STA 251+80 ~ 252+27
252+00
251+75
BEGIN DRILLING + BLASTING
SOLID ROCK SUBGRADE
COM X 309
Solid Rock X 144
1519.15
.077
.077
.010
1509.56
12" GRUBBING MATERIAL
251+50
STONE TYPE IV MOD = 21
DC 3-9-05
BR 2-17-05
DC 2-12-05
MHM 5-6-05
253+67
STA. 253+50
STA. 253+25
STA. 253+00
STA. 252+87.5
STA. 252+50
STA. 252+00
37'6"
PAY LIMIT FOR M.T.S.
PAY LIMIT FOR STEEL BEAM GUARD RAIL
SCALE
SHEET 408 OF 435
KEUFFEL & SECTION

SEARSBURG – WILMINGTON
NHF 010-1 (18)
STA. 253+50 TO 254+50
SHEET 409 OF 435

CHK. LODGE MM 3/16/05

FINAL SURVEY — NOTE BOOK — NO. — SURVEYED — PLOTTED — TEMPLATE — AREAS — AREAS CHECKED — BY — DATE

ORIGINAL SURVEY — NOTE BOOK — NO. — SURVEYED — PLOTTED — TEMPLATE — AREAS — AREAS CHECKED — BY — DATE

120 100 80 60 40 20 ℄ 20 40 60 80 100 120

1570 1560 1550 1540 1530 1520 1510

1-2 1-1½ 2-1 1-4 4-1 2-1 2-1

COM EX = 1174 ✓
Sol'd Rock x 3518 ✓
Rock Borrow (Mat) 217 ✓

COM EX = 418 ✓
Solid Rock x 2,367 ✓
Rock Borrow (mat) 426 ✓

COM EX = 527 ✓
Solid Rock x 1327 ✓
Rock Borrow (mat) 45 ✓
2-17-05

MHM 5-6-05

253+50 LT. ~ 255+50 LT.
NEW 6" x 200' UNDERDRAIN
W/ FB @ 255+50 LT.

10+50 ↑ ℄ EAST CONN
PATH
.021
1-2
SR1 254+50 = 510.1003
VT. EAST CONNECTOR RTE 9
-7.19%

1520.65
-3.0%
1514.75
254+50
7:3.5
1511.8
S1, Sa
9.0 –
S1, Sa, Cobbles
19.0 – Rock TCOB
AP:35

AS PER TYPICAL

1520.40
1514.12
1511.55
254+00

253+50 C.L
NEW 18"x104' PCCSP (.079) OR CPAP (.075) OR RCP CLASS III OR CPEP (SL)
W/DITCH CHECK @ INLET + STONE FILL,
TYPE I @ OUTLET

253+50 RT. ~ 255+50 RT.
NEW 6" x 200' UNDERDRAIN
W/ FB @ 255+50 RT.

253+50 RT.
NEW 6" x 22' UNDERDRAIN
CARRIER PIPE W/ FB @
253+50 RT.

1520.15
-.077 -.077 -.010
1513.5
-2.2727%
1513.0
1510.0
OUTLET DITCH – (2' wide) (1-2 slopes)
Ditch To Reservoir

Ditch Check Elev 1513.0
T/G 1514.0
INV. 1511.3
INV 1511.2
253+50

SHEET 409 OF 435

SEARSBURG – WILMINGTON
NHF 010-1 (18)
STA. 255+00 To 255+50
SHEET 410 OF 435

FINAL SURVEY
NOTE BOOK
NO.
SURVEYED
PLOTTED
TERM-ATE
AREAS
AREAS CHECKED
BY
DATE

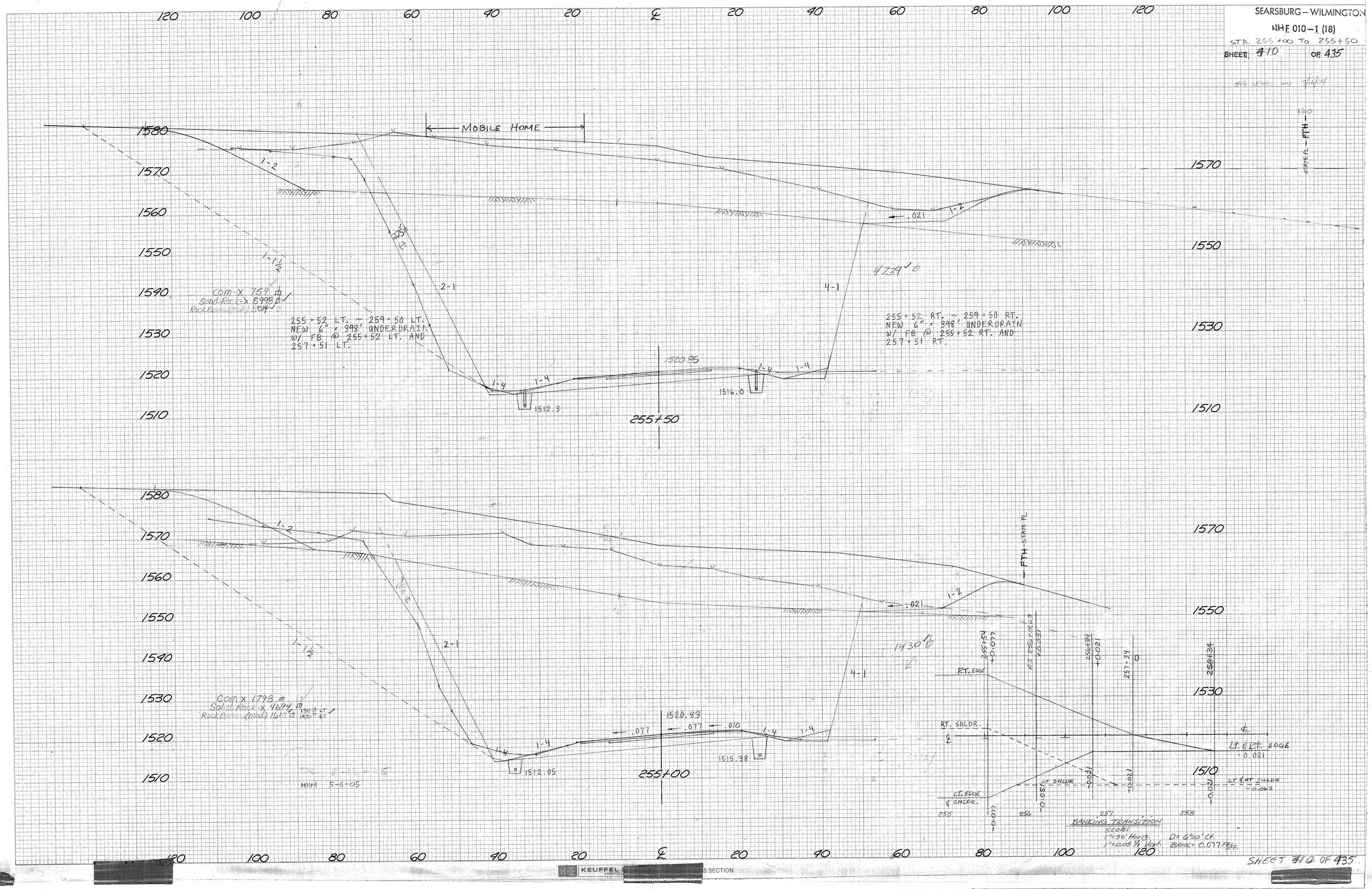

SHEET 410 OF 435

SEARSBURG – WILMINGTON
NHF 010-1 (18)
STA. 256+00 TO 256+50
SHEET 411 OF 435

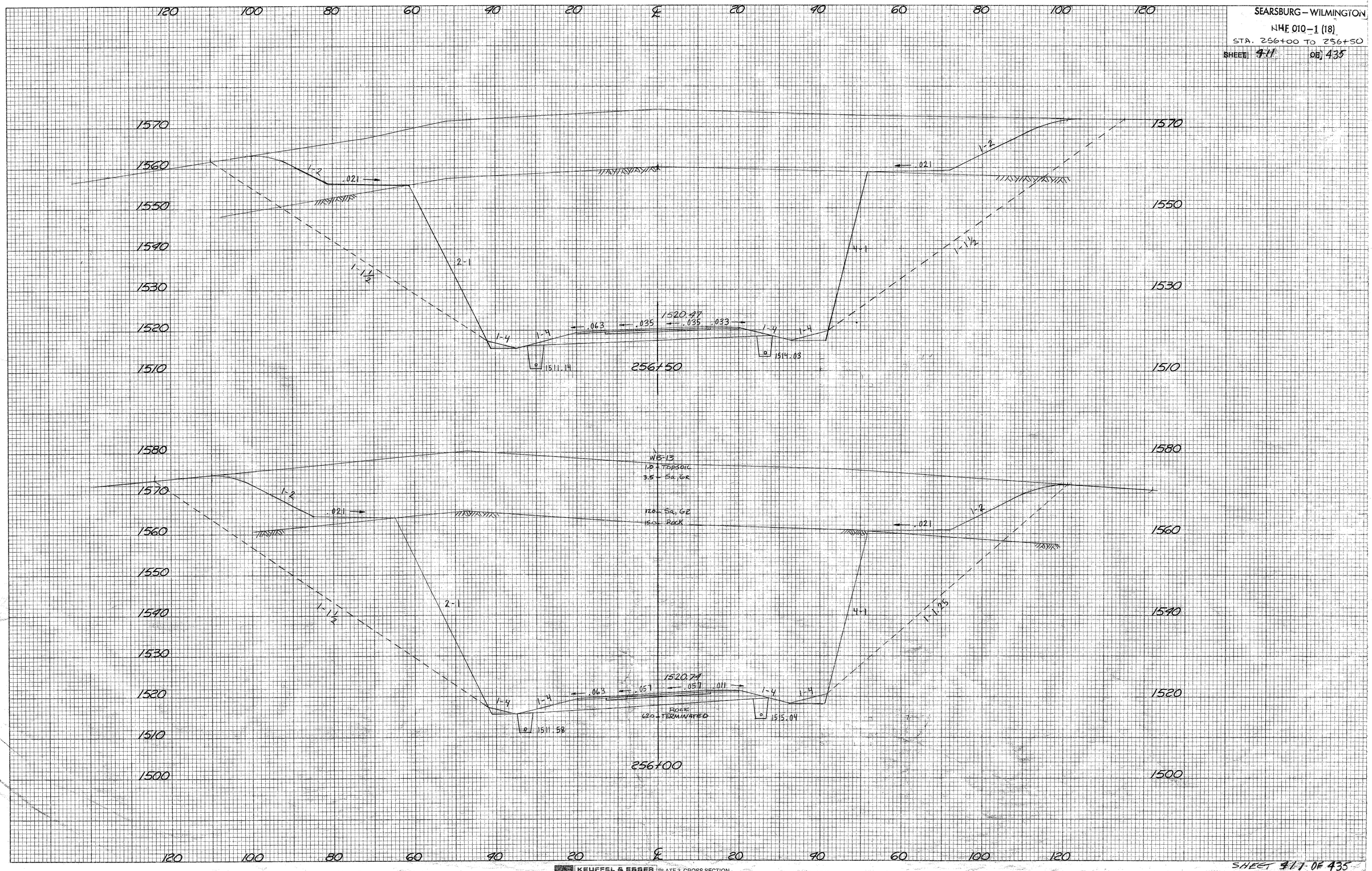

FINAL SURVEY		BY	DATE
NOTE BOOK	SURVEYED		
	PLOTTED		
	TEMPLATE		
	AREAS		
NO.	AREAS CHECKED		

ORIGINAL SURVEY		BY	DATE
NOTE BOOK	SURVEYED		
	PLOTTED		
	TEMPLATE		
	AREAS		
NO.	AREAS CHECKED		

KEUFFEL & ESSER A FRATCO Company | PLATE 3, CROSS SECTION

SHEET 411 OF 435

SEARSBURG – WILMINGTON
NHF 010-1 (18)
STA. 257+00 TO 257+50
SHEET 412 OF 435

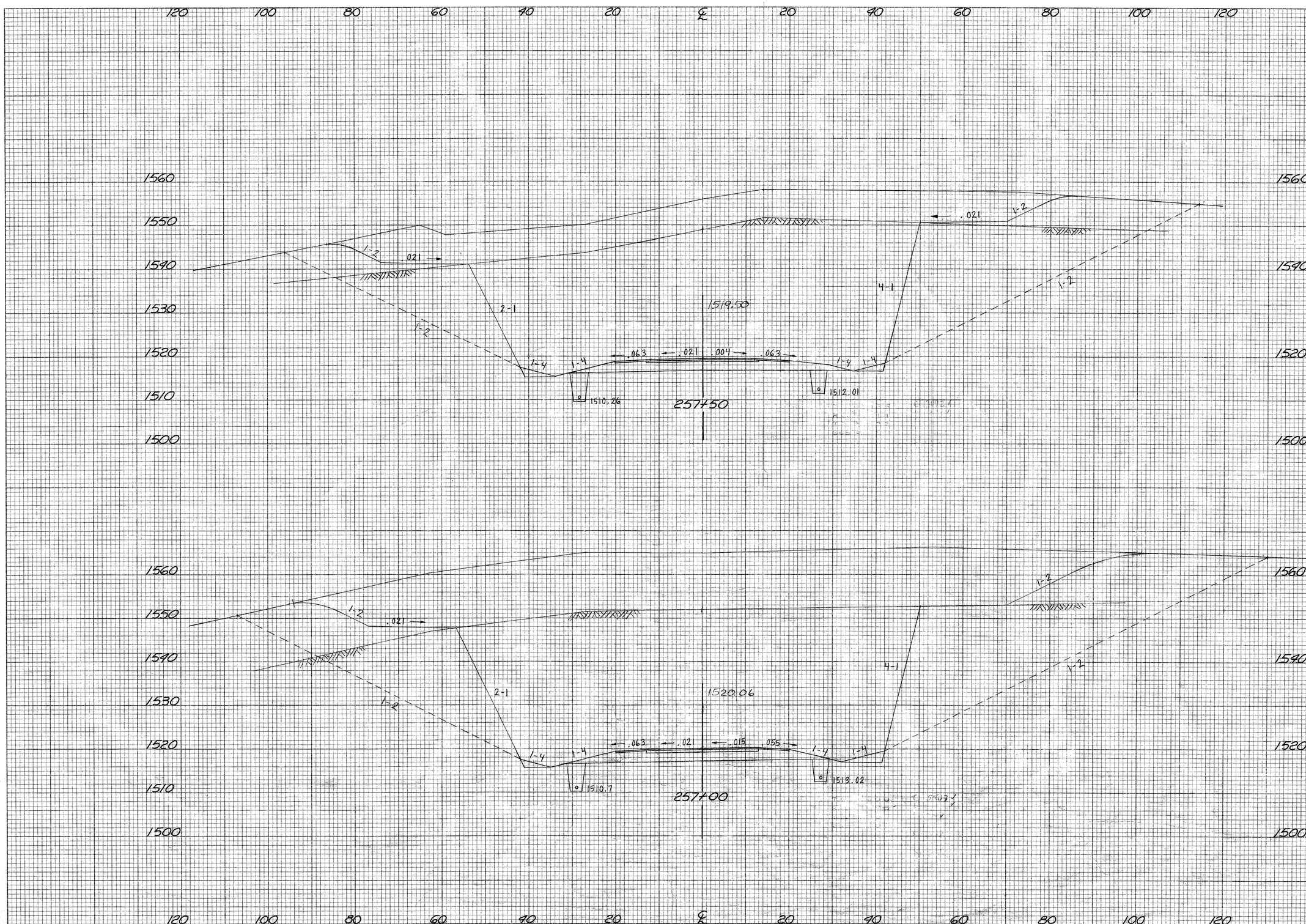

FINAL SURVEY		BY	DATE
NOTE BOOK	SURVEYED		
	PLOTTED		
	TEMPLATE		
	AREAS		
NO.	AREAS CHECKED		

ORIGINAL SURVEY		BY	DATE
NOTE BOOK	SURVEYED		
	PLOTTED		
	TEMPLATE		
	AREAS		
NO.	AREAS CHECKED		

KEUFFEL & ESSER PLATE 3. CROSS SECTION

SHEET 412 OF 435

SEARSBURG – WILMINGTON
NHF 010-1 (18)
STA. 258+00 TO 259+00
SHEET 413 OF 435

120 100 80 60 40 20 ℄ 20 40 60 80 100 120

1516.93

1520 1510 1500

Sta. 258+94 to 261+78 Lt
Special Ditch w/Stone Fill, Type I

1-2 1-4 1-4 1-4 1-4 1-2

1508.94 1508.98

259+00

1-9 1-7

1510

DRIVEWAY SECTION
258+65, 35' LT
PARALLEL TO ROADWAY

258+65 LT
NEW 15"x 56' CSP (.064) OR RCP CLASS III
OR CPEP(SL) W/ MES @ INLET + OUTLET

258+65 Skewed Lt
Construct Type A 2" Gravel
Drive - 12' Wide

1530 1520 1510 1500

1517.93

1-2 1-4 1-4 .063 .021 .021 .063 1-4 1-4 1-2

1509.38 1509.99

258+50

258+47.5 RT
END MANUFACTURED TERMINAL SECTION - FLARED
BEGIN STEEL BEAM GUARD RAIL

HEIGHT HEIGHT

258+25
END DRILLING AND BLASTING
SOLID ROCK SUBGRADE

258+10 RT
BEGIN MANUFACTURED TERMINAL SECTION - FLARED

1550 1540 1530 1520 1510 1500

WB-14
0.5 - Topsoil
3.5 - Sa, GR
1.20 - Rock
19.5 - Rock
19.5 - Rock
1518.79
24.5 - TERMINATED - Rock

.021 1-2 .063 .021 .014 .063 1-4 1-4 1-3 4-1

1509.82 1511.0

258+00

257+80 LT
DEMOLITION AND DISPOSAL
OF BUILDING NO. 3

120 100 80 60 40 20 ℄ 20 40 60 80 100 120

ORIGINAL SURVEY
NOTE BOOK
NO.
SURVEYED
PLOTTED
TEMPLATE
AREAS
AREAS CHECKED
BY
DATE

FINAL SURVEY
NOTE BOOK
NO.
SURVEYED
PLOTTED
TEMPLATE
AREAS
AREAS CHECKED
BY
DATE

SEARSBURG – WILMINGTON
NHF 010-1 (18)
STA. 259+60 TO 261+00
SHEET 414 OF 435

FINAL SURVEY		BY	DATE
ORIGINAL SURVEY	SURVEYED		
	PLOTTED		
NOTE BOOK	TEMPLATE		
	AREAS		
NO.	AREAS CHECKED		

STA 261+00

1511.51

1.2 1.2 1.2

1500

1490

261+00

STA. 260+50

1480

GUARDRAIL

PAY LIMIT FOR STEEL BEAM GUARDRAIL

1513.03

1510

1.3 1.2

1500

260+50

1.2 CELLAR DRAIN

STA 260+0 ± 261+20 RT
SOUTH OF SPECIAL DITCH

3'

STA 260+03

STA. 260+00

1490

PAY LIMIT FOR M.T.S.

37'6" PAY LIMIT FOR M.T.S.

STA 260+03 LT.
END MANUFACTURED TERMINAL SECTION - FLARED
BEGIN STEEL BEAM GUARD RAIL

1514.48

1.3.5 1.2

1510

1500

6

1.2

1506.6

4.0 Sa/Si

6.0 Sa

260+00

Sa

14.0 TERMINATED
AP-37

4'6" 4'

STA 259+65.5

1490

STA 259+65.5 LT.
BEGIN MANUFACTURED TERMINAL SECTION - FLARED

10'

STA. 259+50

0 0 10'

SCALE

1520

SHOULDER

1515.77

.063 .021 .021 .063

1.3.5 1.3

1.2

1510

1.3158 %

1508.5

INV. 1508.25

259+50 LT.
NEW 6" x 19' UNDERDRAIN
CARRIER PIPE W/ FB @
259+50 LT.

To STA 260+00

DRAG CHECK ELEVATIONS

T/G 1510.0

INV. 1508.0

INV 1507.4

259+50

1500

LINE OF NORMAL

259+23.5

STA. 259+00

BUILDING

260+00 RT TO 260+90 RT (APPROX LOC.)
EXIST. CELLAR DRAIN (CUT) DRAIN INTO
SPECIAL DITCH @ 260+00 ~ 20'± RT.

MATCH LINE

STA. 257+60

STA. 257+50

1490

5

1

STA. 257+17

SCALE

0 10' 0

1520

1500

STA. 259+00

STA. 257+60

MATCH LINE

STA. 259+50 RT. ~ 260+00 LT.
NEW 18" x 104' PC(CSP (.064) OR
CAAP (.060) OR RCP CLASS III OR
CPEP W/ DITCH CHECK @ INLET

1490 258+10 14' 48'

STA. 258+50

STA. 258+47.5

1510

PAY LIMIT FOR M.T.S.

PAY LIMIT FOR STEEL BEAM GUARD RAIL

1

1

GUARDRAIL

STA. 259+23

1500

1480

STA. 259+00

STA 258+98

1510

1500

5

1

STA. 257+60

MATCH LINE

120 100 80 60 40 20 ℄ 20 40 60 80 100 120

KEUFFEL & ESSER CO. | PLATE 3, CROSS SECTION

SHEET 414 OF 435

SEARSBURG – WILMINGTON
NHF 010-1 (18)
STA. 261+50 TO 263+00
SHEET 415 OF 435

PARKING AREA TYPICAL
STA. 261+67 TO STA 263+35 RT

STA 263+24 LT.
CONSTRUCT TYPE A-1 GRAVEL
DRIVE = 22' WIDE

STA. 263+08 LT.
REMOVE EXISTING 15" CMP

STA. 262+80 LT.
CONSTRUCT TYPE A-1 GRAVEL
DRIVE = 20' WIDE

263+00 LT. ~ 264+36 LT.
NEW 6" x 136' UNDERDRAIN
W/ FB @ 263+00 LT.

3" SUBBASE OF CRUSHED GRAVEL (FINE GRADED)
15" SUBBASE OF DENSE GRADED CRUSHED STONE

262+00
262+50
263+00
263+00
262+50
262+00
261+50

1507.38
1508.08
1509.00
1510.15

VARIES TO 20'
VARIES TO 22'
STONE PAD = 3'-0" WIDE
SUBBASE OF GRAVEL
-0.021-
1-7
1-6
1-4
1-2
1-3
1-2.5
1+1.5
1-1.5
1500.0
X-SECT TAKEN @ 33' LEFT OF CENTERLINE

STA. 262+80 LT.
NEW 18" X 60" CSPP (.064) OR RCP CL III OR CPEP W/STONE FILL, TYPE I @ OUTLET

262+53 LT.
END STEEL BEAM GUARD RAIL

STA 262+13 SKEW ℄ 68°-30' RT.
NEW 9'-11" x 6'-8" x 156' CAAPPA (.125)
W/ CONCRETE CRADLES AT BOTH ENDS + DITCHES W/ STONE FILL, TYPE II @ INLET + OUTLET

1'-0" GRUBBING MATERIAL (TYP.)
2'-0" STONE FILL TYPE II (TYP.)
INV. 1489.67
STA 261+91, 56' LT
INLET CHANNEL (SKEWED) (MEET EXISTING)
INLET CHANNEL (14' WIDE) x 70' LONG 1:2 SLOPES W/ STONE FILL TYPE II (2' DEEP)
GEOTEXTILE UNDER STONE FILL (TYP.)
TO STA 262+50
TO STA 262+00
15.0 – TERMINATED AT: BE
SA,Si
SA
5.0
6.5
EW
ER

STA 262+53 LT.
END STEEL BEAM GUARD RAIL
(FOR END TREATMENT SEE STD. 6-10)
GUARDRAIL
EDGE OF TRAVELWAY
LINE OF NORMAL SHOULDER
20'
0
SCALE
0 20'

INV 1486.50
STA 262+48, 89' RT
HARRIMAN RES EL VARIES
OUTLET CHANNEL - 14' WIDE x 9' LONG (1-2 SLOPES) W/ STONE FILL, TYPE II (2' DEEP) (SKEWED)

STA 262+25± RT
REMOVE EXIST 5'x5' CONC. CULV.

CF&V SUBB 201 (TURN-AROUND NOT INCLUDED)
R/W SAND 230
F 702 5/40 ML
PARKING AREA FILL 135

STA 261+50 = STA 20+00
I.T. EAST DRIVE CONNECTOR (RTE 9)

STA 20+60 (SKEWED) (East Drive Connector)
NEW 18" X 92' (PCC SPC.064) OR CAAP (.060) OR RCP CLASS III OR CPEP W/ CSPES OR CAAPES @ INLET & STONE FILL, TYPE I @ OUTLET

.063 .021 .021 .063
3.0%
8.8%
TRACE OF STONES SA,Si, MOIST
NATD

FINAL SURVEY: SURVEYED, PLOTTED, TEMPLATE, AREAS, AREAS CHECKED, NOTE BOOK, NO., BY, DATE

ORIGINAL SURVEY: SURVEYED, PLOTTED, TEMPLATE, AREAS, AREAS CHECKED, NOTE BOOK, NO., BY, DATE

KEUFFEL & ESSER PLATE 2, CROSS SECTION

SHEET 415 OF 435

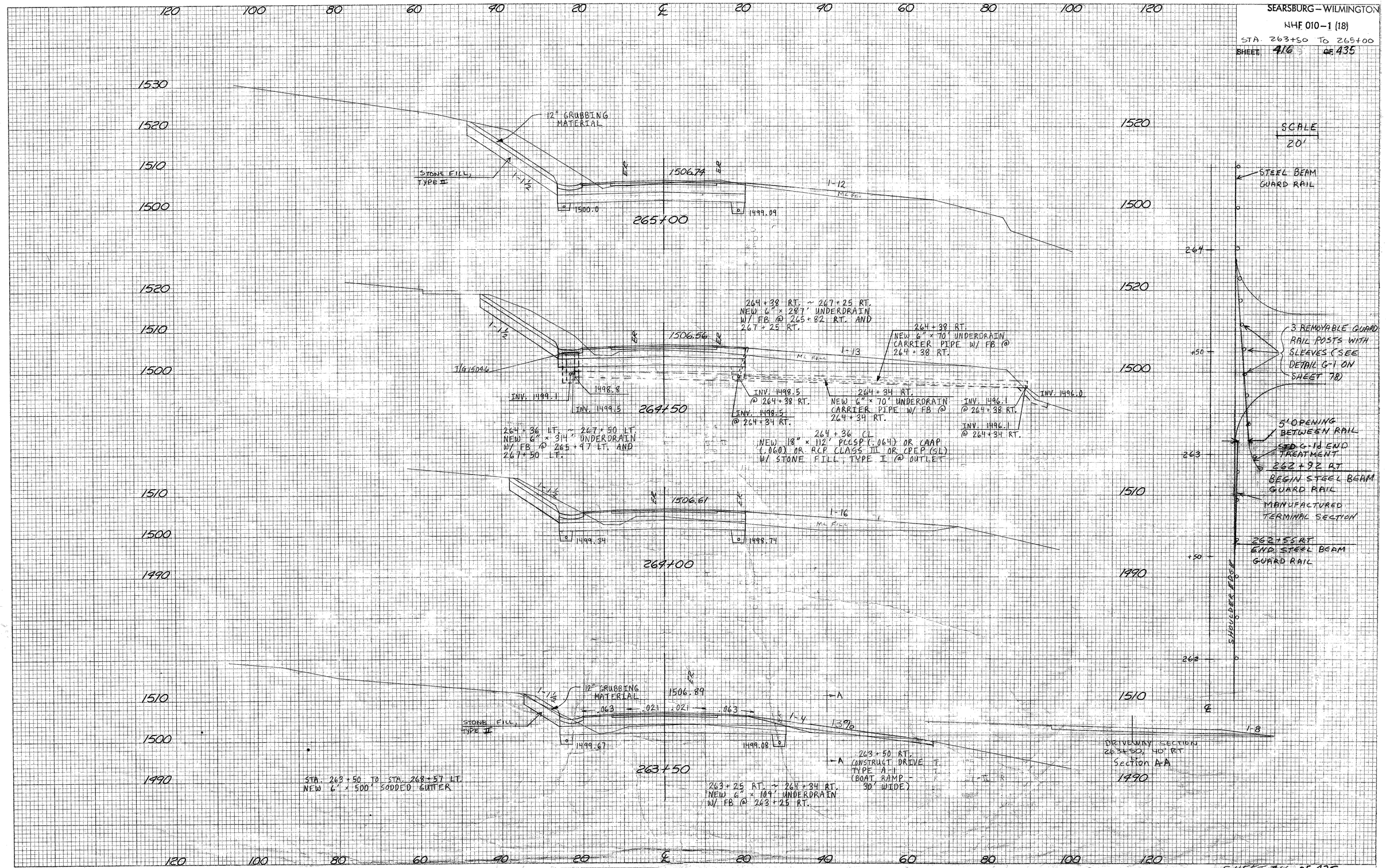
SEARSBURG – WILMINGTON
NHF 010-1 (18)
STA. 263+50 TO 265+00
SHEET 416 OF 435
SCALE
20'
12" GRUBBING MATERIAL
STONE FILL, TYPE II
1506.74
1500.0
1499.09
265+00
264+38 RT. ~ 267+25 RT.
NEW 6" × 287' UNDERDRAIN
W/ FB @ 265+82 RT. AND
267+25 RT.
264+38 RT.
NEW 6" × 70' UNDERDRAIN
CARRIER PIPE W/ FB @
264+38 RT.
1506.56
1498.8
INV. 1499.1
INV. 1499.5
264+50
INV. 1498.5
@ 264+38 RT.
INV. 1498.5
@ 264+34 RT.
264+34 RT.
NEW 6" × 70' UNDERDRAIN
CARRIER PIPE W/ FB @
264+34 RT.
INV. 1496.1
@ 264+38 RT.
INV. 1496.1
@ 264+34 RT.
INV. 1496.0
264+36 LT. ~ 267+50 LT.
NEW 6" × 314' UNDERDRAIN
W/ FB @ 265+97 LT. AND
267+50 LT.
264+36 CL
NEW 18" × 112' PCCSP (.064) OR CAAP
(.060) OR RCP CLASS III OR CPEP (SL)
W/ STONE FILL, TYPE I @ OUTLET
1506.61
1499.34
1498.74
264+00
12" GRUBBING MATERIAL
1506.89
.063
.021
.021
.063
STONE FILL, TYPE II
1499.67
1499.08
263+50
263+50 RT.
CONSTRUCT DRIVE
TYPE A-1
(BOAT RAMP -
30' WIDE)
263+25 RT. ~ 264+34 RT.
NEW 6" × 109' UNDERDRAIN
W/ FB @ 263+25 RT.
STA. 263+50 TO STA. 268+57 LT.
NEW 6' × 500' SODDED GUTTER
DRIVEWAY SECTION
263+50, 40' RT
Section A-A
STEEL BEAM GUARD RAIL
3 REMOVABLE GUARD RAIL POSTS WITH SLEEVES (SEE DETAIL G-1 ON SHEET 78)
5' OPENING BETWEEN RAIL
STD G-1d END TREATMENT
262+92 RT
BEGIN STEEL BEAM GUARD RAIL
MANUFACTURED TERMINAL SECTION
262+55 RT
END STEEL BEAM GUARD RAIL
SHOULDER EDGE
FINAL SURVEY
ORIGINAL SURVEY
NOTE BOOK
NO.
SURVEYED
PLOTTED
TEMPLATE
AREAS
AREAS CHECKED
BY
DATE
KEUFFEL & ESSER
PLATE 3, CROSS SECTION
SHEET 416 OF 435.

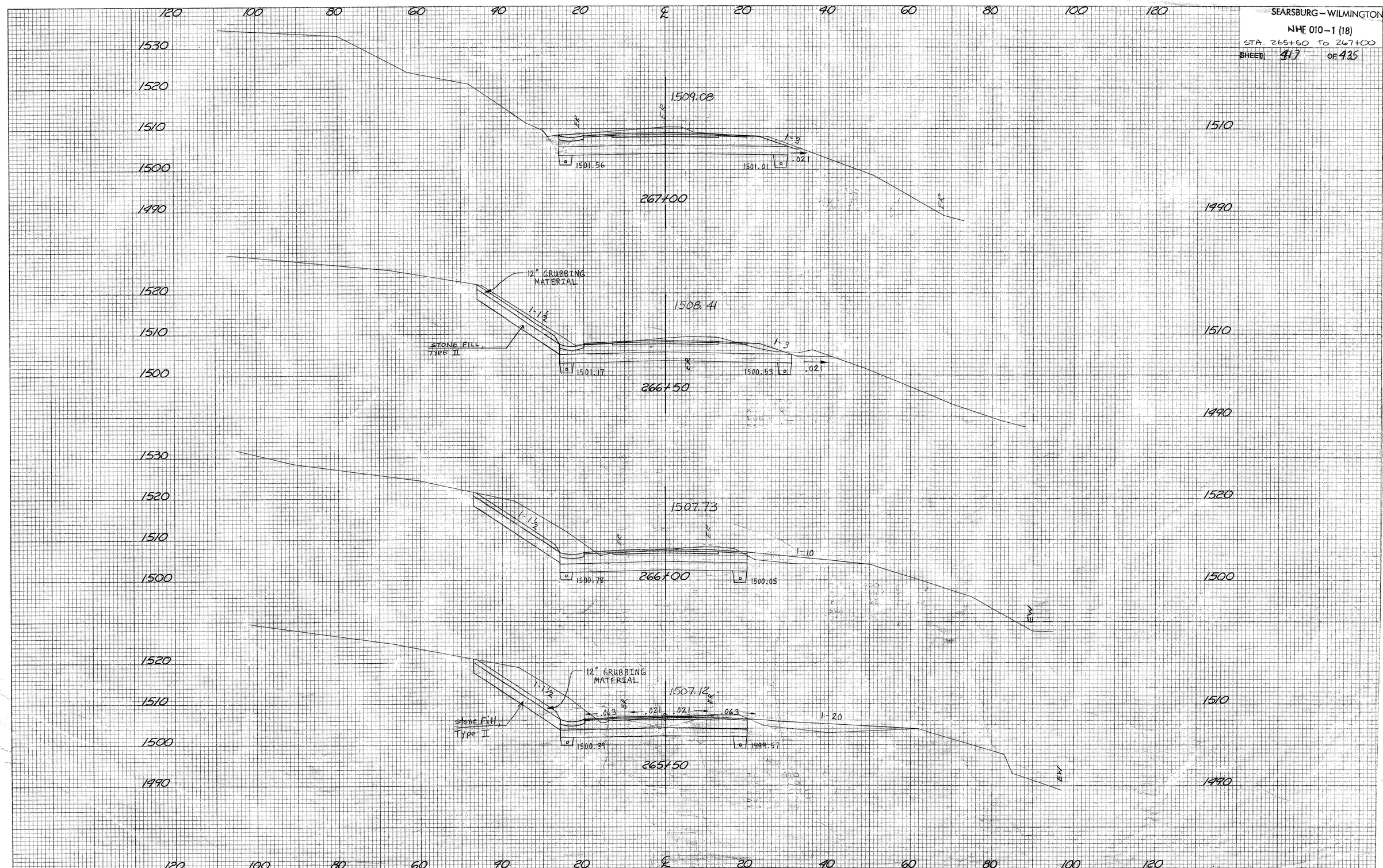

FINAL SURVEY
NOTE BOOK
NO.
SURVEYED
PLOTTED
TEMPLATE
AREAS
AREAS CHECKED
BY
DATE

ORIGINAL SURVEY
NOTE BOOK
NO.
SURVEYED
PLOTTED
TEMPLATE
AREAS
AREAS CHECKED
BY
DATE

KEUFFEL & ESSER
A KNATCH Company
PLATE 3, CROSS SECTION

SEARSBURG – WILMINGTON
NHF 010-1 (18)
STA. 267+50 TO 269+39.89BK.
SHEET 418 OF 435

EQUALITY: 269+39.89 BK. = 270+85.60 AHD. = -145.71' EQ.

Sta. 268+30, Lt.
Remove
18" CMP

268 + 75 LT.
NEW 15" × 28' CSP (.064) OR
RCP CLASS III OR CPEP(SL)
W/ CSPES @ INLET AND
OUTLET

0750
Elev 1514.0
TYC = 20"
TMC = 1039

Existing
1.13%
8.68%
1-9
1-10
30LF - 15"
DRIVEWAY SECTION
268 + 75, LT.

Sta 268+25, Lt.
Construct Type A-2 Gravel
Drive - 12' Wide

268 + 75

1511.78
1505.5
.048 .022 .022 .063
FILL
GRANULAR BORROW
1:1.7
12" GRUBBING MATERIAL
R.M.P. 1494.00
1:1.5
E. Lake
269+00

1511.38 1511.38 1511.38

Driveway
1-3
1-18
1504.23
.063 .005 .021 .063
1511.10
FILL
GRANULAR BORROW
1:1.7
268+50
268 + 50 RT.
NEW 12" × 20' CSP (.064)
W/ PRCEDI AND STONE FILL,
TYPE I, AT OUTLET
STONE FILL, TYPE I
(2' WIDE PAD)
1:1.5
R.M.P. 1494.00
E. Lake

Driveway
1510.43
1502.96
.063 .008 .021 .063
1-3
WET
MOIST
DRY
FILL
GRANULAR BORROW
1:1.7
268+00
AP-89
INLTD
R.M.P 1494.00
1:1.5
STONE FILL, TYPE III (MOD.)
(SELECTED BLASTED LEDGE FROM PROJECT)
E. Lake

NOTE: STATION 268+00 – 273+50
CONSTRUCT GEOSYNTHETIC
REINFORCED SLOPES.

Driveway
267 + 62 LT. – 269 + 00 LT.
NEW 6" × 138' UNDERDRAIN
W/ EB @ 269 + 00 LT.
267 + 62 C.L.
REMOVE EXIST 15" RCP
NEW 18" X 60' PCCSP (.064)
OR CAAP (.060) OR CPEP (SL) AND
STONE FILL, TYPE I @
OUTLET
1509.75
1-4
.063 .017 .021 .063
1-1.5
12" GRUBBING MATERIAL
T/G 1508.2
267+50
INV. 1501.0
INV. 1500.0
INV. 1502.0

267+46
268+10
268+46
269+00
269+20
269+39.89 BK
270+85.60 AHD
-0.038
-0.038
-0.038

SEARSBURG – WILMINGTON
NHF 010-1 (18)
STA. 270+85.60 AND TO 271+60
SHEET 319 OF 435

FINAL SURVEY — NOTE BOOK — NO. — SURVEYED — PLOTTED — TEMPLATE — AREAS — AREAS CHECKED — BY — DATE

ORIGINAL SURVEY — NOTE BOOK — NO. — SURVEYED — PLOTTED — TEMPLATE — AREAS — AREAS CHECKED — BY — DATE

Note:
Maintain Existing
Parking Area
in Front of
Garage

Sta. 271+00 Lt.
Construct Type A1 Gravel
Drive - 20' Wide

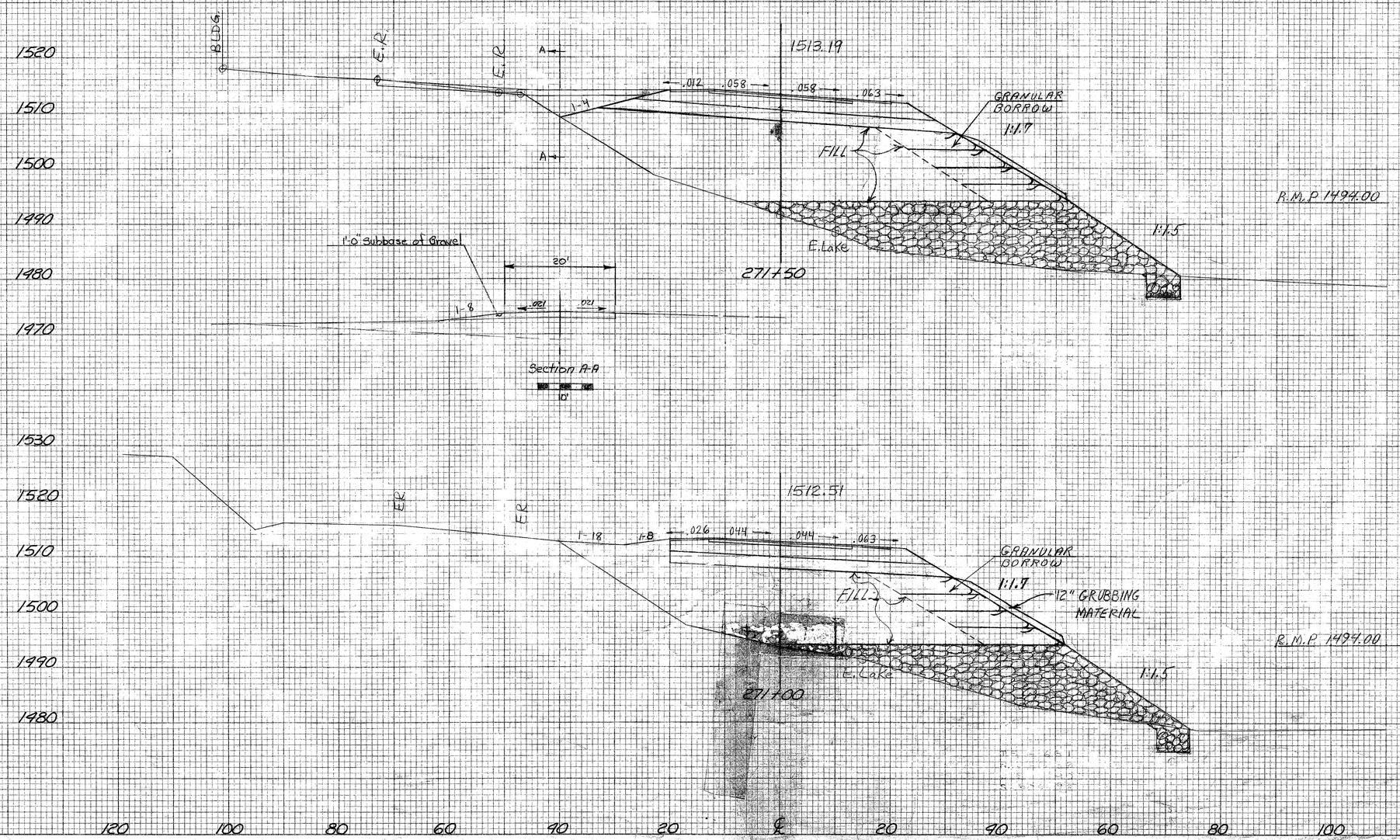

KEUFFEL & ESSER A NUMATICS Company | PLATE 3, CROSS SECTION

SHEET 319 OF 435

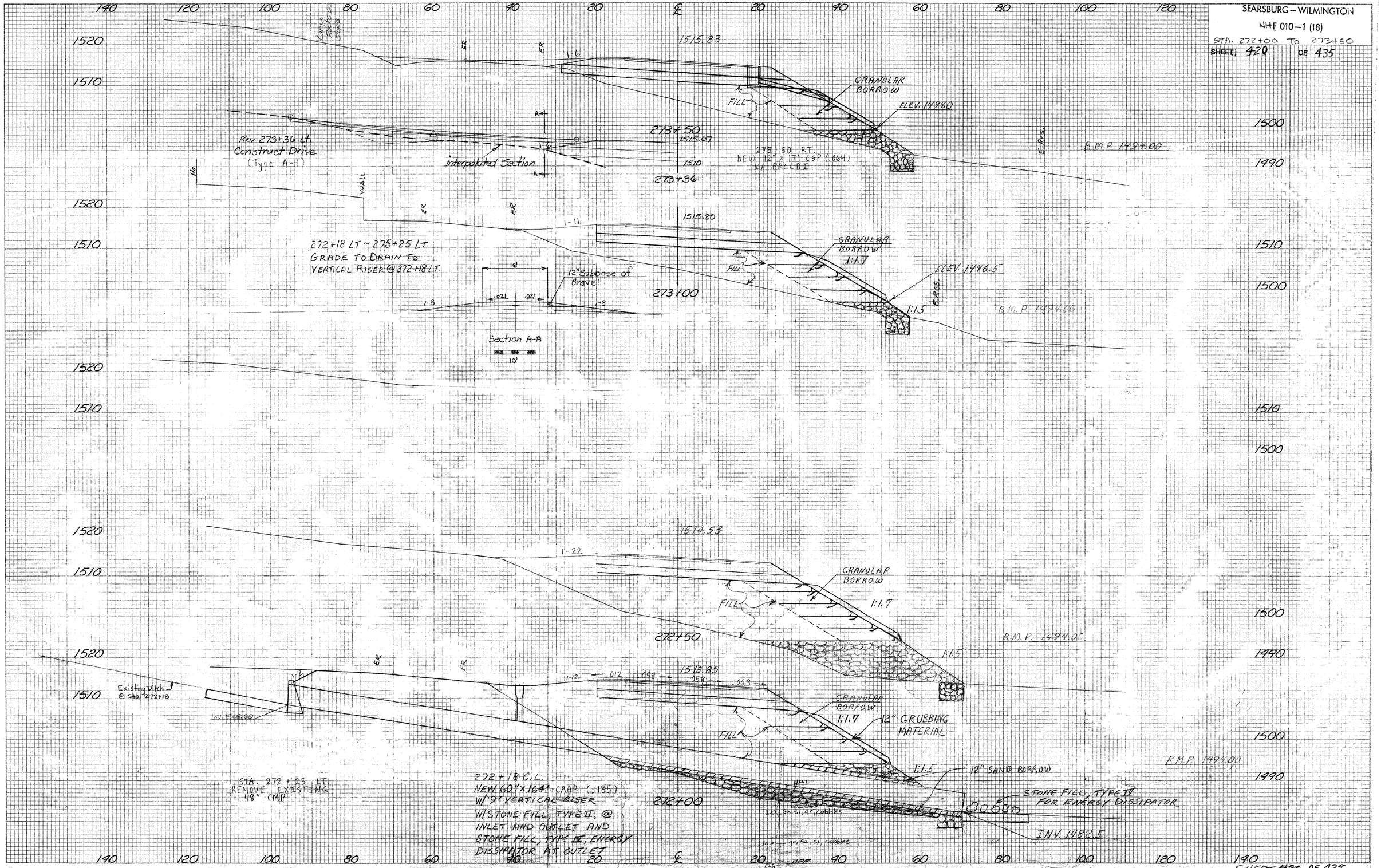
SEARSBURG – WILMINGTON
NHF 010-1 (18)
STA. 272+00 TO 273+50
SHEET 420 OF 435
1515.83
GRANULAR BORROW
ELEV. 1499.0
FILL
273+50
1515.67
Rev. 273+36 Lt. Construct Drive (Type A-1)
Interpolated Section
273+50 RT. NEW 12" x 17' CSP (.064) W/ PRCCDI
273+36
B.M.P. 1494.00
E. Res.
1515.20
272+18 LT ~ 275+25 LT GRADE TO DRAIN TO VERTICAL RISER @ 272+18 LT
12" Subbase of Gravel
GRANULAR BORROW 1:1.7
ELEV. 1496.5
273+00
1:1.5
Section A-A
1514.53
GRANULAR BORROW
1:1.7
272+50
1:1.5
1513.85
Existing Ditch @ Sta. 272+18
Inv. 1508.60
GRANULAR BORROW 1:1.7
12" GRUBBING MATERIAL
12" SAND BORROW
STONE FILL, TYPE II FOR ENERGY DISSIPATOR
INV. 1482.5
STA. 272+25 LT. REMOVE EXISTING 48" CMP
272+18 C.L. NEW 60" x 164' CAAP (.135) W/ 9' VERTICAL RISER W/ STONE FILL, TYPE II, @ INLET AND OUTLET AND STONE FILL, TYPE IV, ENERGY DISSIPATOR AT OUTLET
272+00
SHEET 420 OF 435
K&E PLATE 3, CROSS SECTION KEUFFEL & ESSER CO.

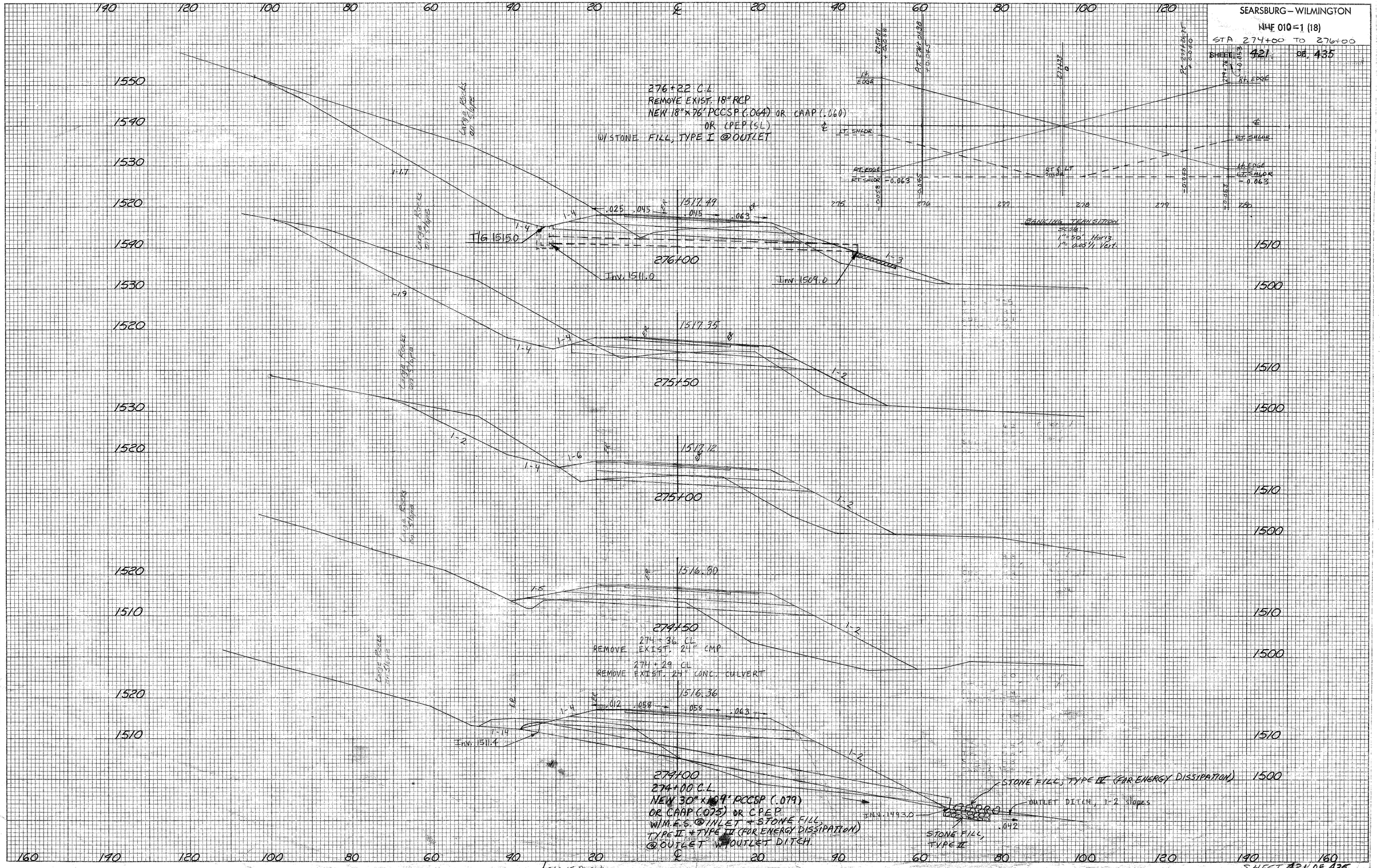
SEARSBURG – WILMINGTON
NHF 010-1 (18)
STA 274+00 TO 276+00
SHEET 421 OF 435
276+22 C.L.
REMOVE EXIST. 18" RCP
NEW 18"x76' PCCSP (.064) OR CAAP (.060)
OR CPEP (SL)
W/STONE FILL, TYPE I @ OUTLET
BANKING TRANSITION
Scale:
1"=50' Horiz.
1"=0.05'/1 Vert.
T/G 1515.0
Inv. 1511.0
Inv. 1509.0
276+00
275+50
275+00
274+50
274+36 CL
REMOVE EXIST. 24" CMP
274+29 CL
REMOVE EXIST. 24" CONC. CULVERT
274+00
274+00 C.L.
NEW 30"x104' PCCSP (.079)
OR CAAP (.075) OR CPEP
W/M.E.S. @ INLET + STONE FILL,
TYPE II + TYPE III (FOR ENERGY DISSIPATION)
@ OUTLET W/OUTLET DITCH.
Inv. 1511.4
STONE FILL, TYPE III (FOR ENERGY DISSIPATION)
OUTLET DITCH, 1-2 slopes
STONE FILL, TYPE II
INV. 1493.0
W OUTLET DITCH
K&E PLATE 3, CROSS SECTION
SHEET 421 OF 435

SEARSBURG – WILMINGTON

NHF 010-1 (18)

STA. 276+50 TO 279+00

SHEET 422 OF 435

278+55 LT. ~ 284+50 LT.
NEW 6" x 595' UNDERDRAIN
W/ FB @ 278+55 LT. AND
280+53 LT. AND 282+51 LT.

278+50 C.L.
NEW 18"x92" PCCSP(.064) OR CMP(.060) OR
RCP CLASS III OR CPEP W/
STONE FILL, TYPE I @ OUTLET

276+84 RT.
END MANUFACTURED TERMINAL SECTION-FLARED

276+46.5 RT.
End Steel Beam Guard Rail
BEGIN MANUFACTURED TERMINAL SECTION-FLARED

276+25 LT. ~ 278+50 LT.
NEW 6" x 225' UNDERDRAIN
W/ FB @ 276+25 LT.

FINAL SURVEY — NOTE BOOK — NO. — SURVEYED — PLOTTED — TEMPLATE — AREAS — AREAS CHECKED — BY — DATE

ORIGINAL SURVEY — NOTE BOOK — NO. — SURVEYED — PLOTTED — TEMPLATE — AREAS — AREAS CHECKED — BY — DATE

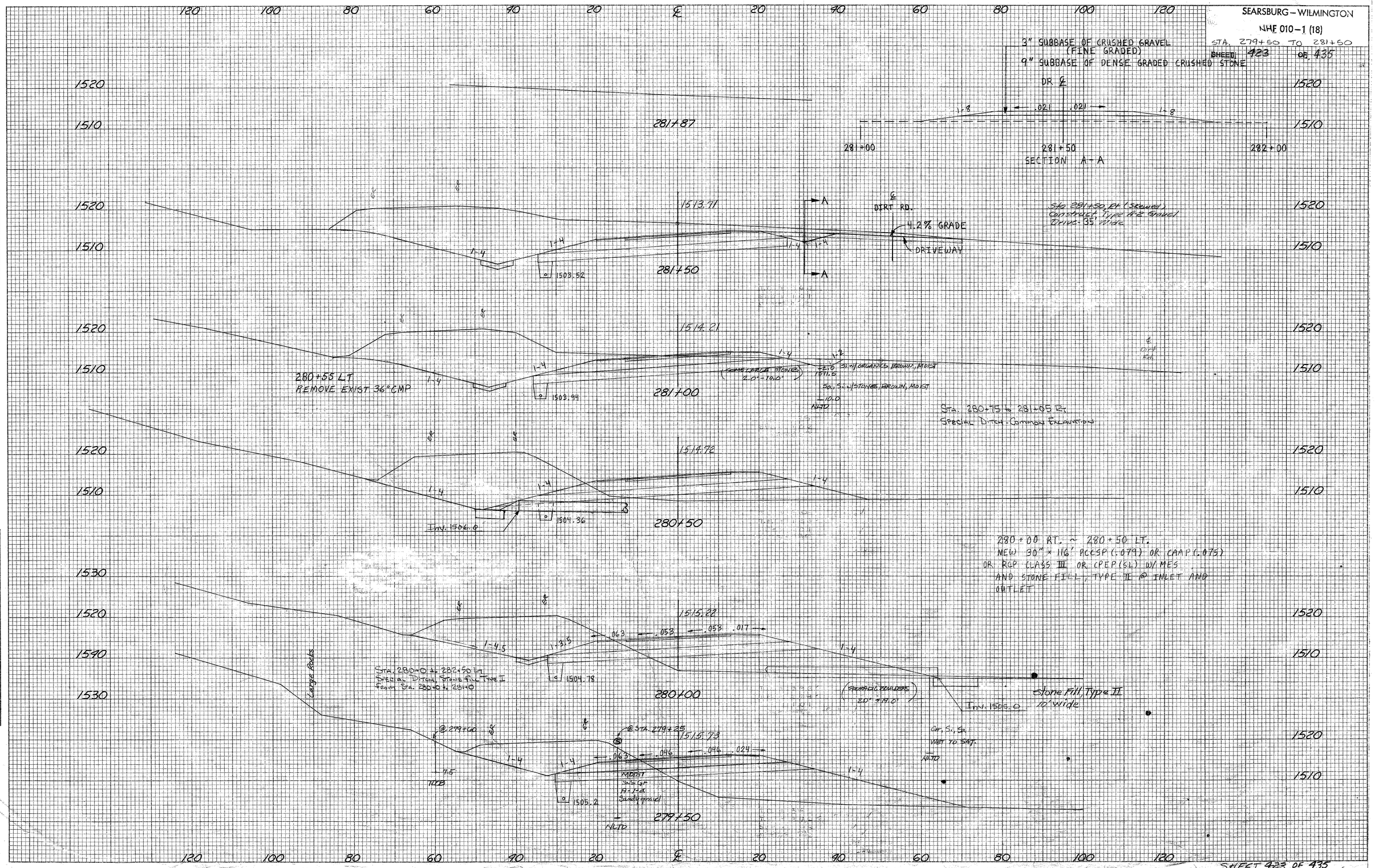

FINAL SURVEY
NOTE BOOK
NO.
SURVEYED
PLOTTED
TEMPLATE
AREAS
AREAS CHECKED
BY
DATE

ORIGINAL SURVEY
NOTE BOOK
NO.
SURVEYED
PLOTTED
TEMPLATE
AREAS
AREAS CHECKED
BY
DATE

K&E PLATE 3, CROSS SECTION
KEUFFEL & ESSER CO.

SHEET 423 OF 435

Searsburg – Wilmington
NHF 010-1(18)
STA. 282+00 to 284+50

Sheet 424 OF 435

120 100 80 60 40 20 ℄ 20 40 60 80 100 120

1520
1510

ER ER

1-2
1-4
1-4

1511.95

.063 .021 .010 .059

0.5 muck

1501.0

1.35% ⅋

284+50

1-2

1500.0

284 + 50 LT. – RT.
NEW 6" x 74' UNDERDRAIN
CARRIER PIPE W/ FB (2)
284 + 50 LT.

1520
1510

1-2.5
1-4
1-3.5

1511.99

.063 .028 .028 .042

1501.42

284+00

1-2

1.0 Sa. Si. w/ORGANICS, SAT.

Sa Si w/ STONES
MOIST

17.0
NLTO

ERES

1520
1510

1-7
1-3

1512.15

1-3.5

.063 .046 .046 .024

1501.84

283+50

1-2

1520
1510

ER ER

1-9
1-4

1512.39

1-3.5

1502.26

1-3

1-9

1.0 Si, wet

Sa, Si w/ STONES, MTW

10.0
TRACES of METAL WIRE

15.0
NLTO

283+00

1520
1510

ER ER

.035

1-4
1-4

1512.75

1-3
1-4

1502.68

282+50

STA. 282+50 to 287+00 Lt.
Special Ditch, Stone fill Type I
From STA. 284+50 to 285+50

ER ER

1520
1510

⑤

1513.20

.050

1-4

1-3.5

.063 .053 .053 .017

1503.1

1-3.5

Gr Sa Moist
Brown
6.0
GR. Sa, Gray, MOIST
58.0
Sa Si, Brown MOIST
19.0
15.0
NLTO

Gr Sa, MOIST
4.5
Si/Sa, MOIST
5.0 (TRACES OF ASH, METAL, GLASS)
NLTO

Sa Bin A-1-b
Sand
MOIST

282+00
AP-41
NLTO

Sa Si w/STONES, BROWN MOIST

282+10 RT
END MANUFACTURED TERMINAL SECTION - FLARED
BEGIN STEEL BEAM GUARD RAIL

281+72.5 RT.
BEGIN MANUFACTURED TERMINAL SECTION - FLARED

E. RES

ERES

283+39 +0.053
PT. 283+78.92 +0.035
284+20 +0.021
284+79
285+29

Rt. EDGE
℄
RT SHLDR -0.017
LT EDGE
LT SHLDR -0.063
-0.053
-0.055
-0.021
-0.021
-0.021
LT & RT EDGE -0.021
LT & RT SHLDR -0.063

STA 283+75

BANKING TRANSITION
Scale
1" = 50' Horiz.
1" = 0.05½ Vert.
D = 3°00' LT.
Bank = 0.053

286
STA 282+50

GUARD RAIL

1570
1500
1510
1500
1520
1510

STA. 282+10

S. Shoulder

Line of Normal

37' 6"

PAY LIMIT FOR STEEL BEAM GUARD RAIL

SCALE
10' 0 10'

1520
1510

STA. 281+72.5

14'

0.45%

STA. 281+58.5

1520
1510

Drive

120 100 80 60 40 20 ℄ 20 40 60 80 100 120

Krueger & Eggert Company PLATE 5, CROSS SECTION 487056 Made in U.S.A.

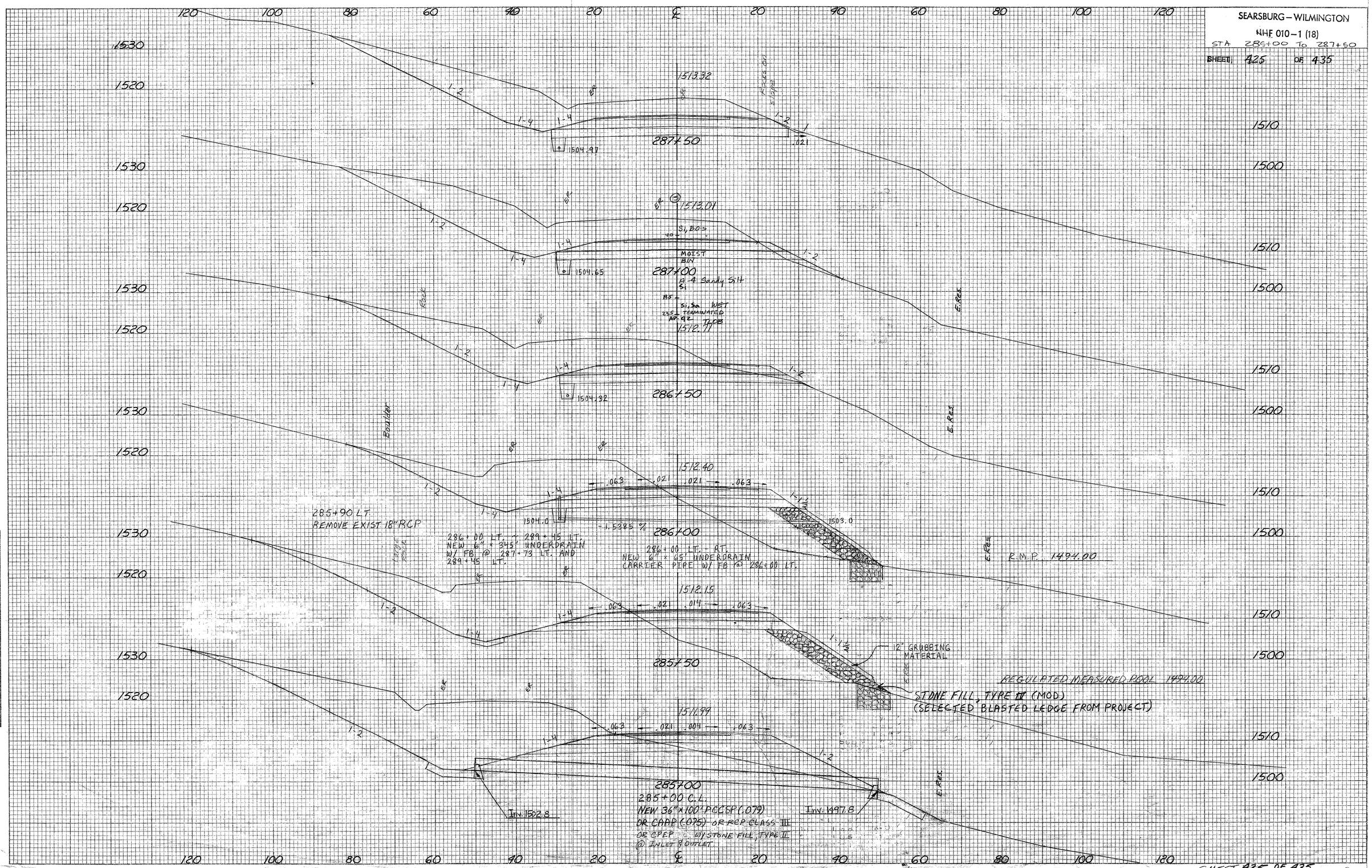

FINAL SURVEY | NOTE BOOK | NO. | SURVEYED | PLOTTED | TEMPLATE | AREAS | AREAS CHECKED | BY | DATE

ORIGINAL SURVEY | NOTE BOOK | NO. | SURVEYED | PLOTTED | TEMPLATE | AREAS | AREAS CHECKED | BY | DATE

K+E PLATE 3, CROSS SECTION KEUFFEL & ESSER CO.

SHEET 425 OF 435

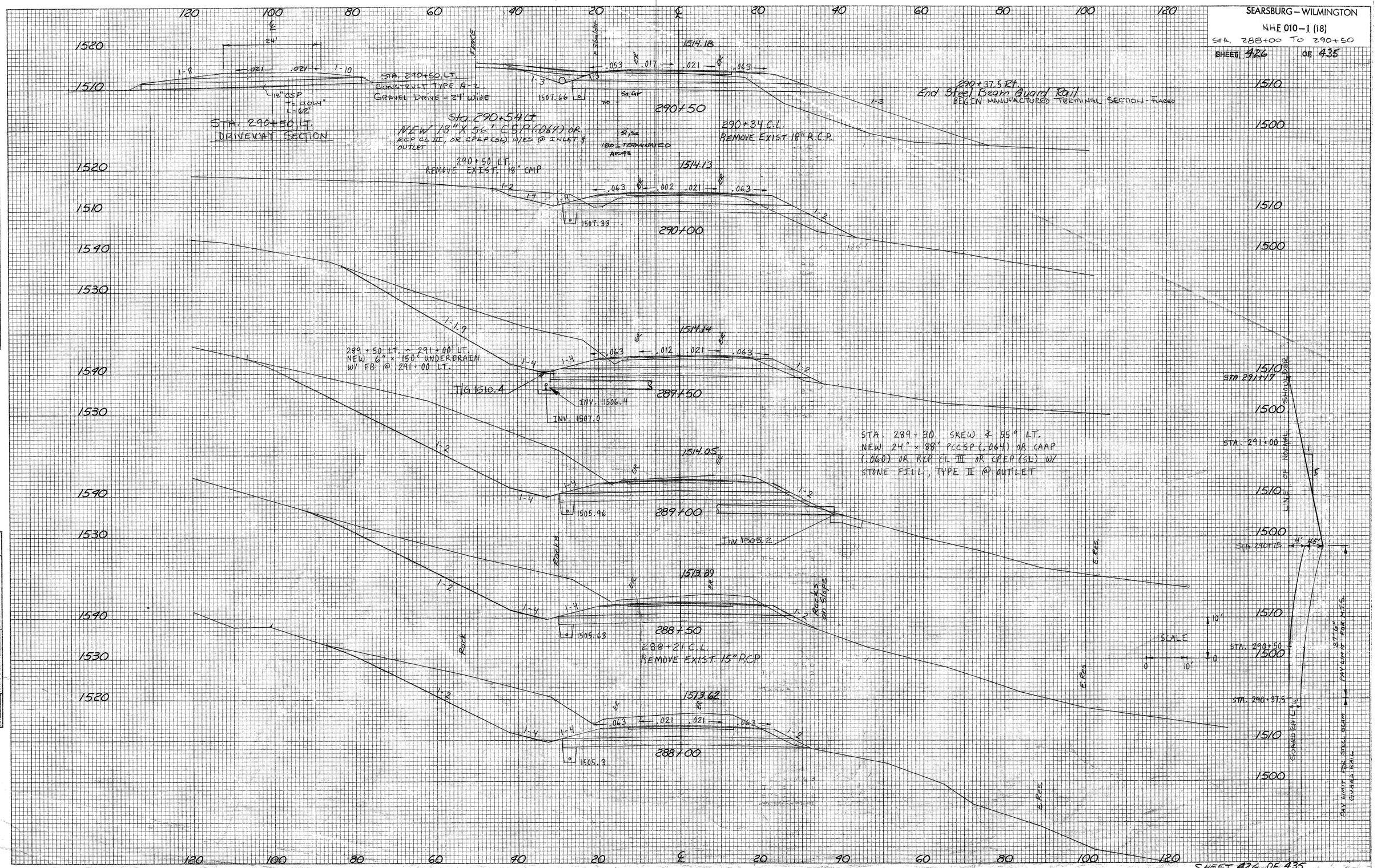
SEARSBURG – WILMINGTON
NHF 010-1 (18)
STA. 288+00 TO 290+50
SHEET 426 OF 435
STA. 290+50, LT.
CONSTRUCT TYPE A-2
GRAVEL DRIVE - 24' WIDE
STA. 290+50, LT.
DRIVEWAY SECTION
Sta. 290+54 Lt.
NEW 18" X 56' CSP (.064) OR
RCP CL III, OR CPEP (SL) W/ES @ INLET & OUTLET
290+50 LT.
REMOVE EXIST. 18" CMP
290+34 C.L.
REMOVE EXIST. 18" R.C.P.
290+37.5 Rt.
End Steel Beam Guard Rail
BEGIN MANUFACTURED TERMINAL SECTION - FLARED
289+50 LT. ~ 291+00 LT.
NEW 6" x 150' UNDERDRAIN
W/ FB @ 291+00 LT.
T/G 1510.4
INV. 1506.4
INV. 1507.0
STA. 289+30 SKEW ∡ 55° LT.
NEW 24" x 88' PCCSP (.064) OR CAAP
(.060) OR RCP CL III OR CPEP (SL) W/
STONE FILL, TYPE II @ OUTLET
Inv. 1505.2
288+21 C.L.
REMOVE EXIST. 15" RCP
Rocks
Rocks on Slope
Rock
E. Res.
SCALE
STA. 291+17
STA. 291+00
STA. 290+75
STA. 290+50
STA. 290+37.5
LINE OF NORMAL SHOULDER
GUARD RAIL
PAY LIMIT FOR STEEL BEAM GUARD RAIL
PAY LIMIT FOR M.T.S.
1514.18
1514.13
1514.14
1514.05
1513.89
1513.62
1507.66
1507.33
1505.96
1505.63
1505.3
290+50
290+00
289+50
289+00
288+50
288+00
FINAL SURVEY
ORIGINAL SURVEY
NOTE BOOK
NO.
SURVEYED
PLOTTED
TEMPLATE
AREAS
AREAS CHECKED
BY
DATE
K+E PLATE 3, CROSS SECTION
KEUFFEL & ESSER CO.
SHEET 426 OF 435

SEARSBURG - WILMINGTON
NHF 010-1(18)
STA. 291+00 TO 292+00
SHEET 427 OF 435

292+50
292+25
292+00
291+75
291+00

3½" Bit. Conc. Pave.
1" Bit. Conc. Pave.
2¾" Bit. Conc. Pave.
25'
25'
25'
75'

24" SUBBASE
24" SAND BORROW
20'
0'
SCALE
0 10" 20"

MATERIALS TRANSITION DIAGRAM

1530
1520
1530
1520

1515.39
MATCH EXISTING
292+50
End Approach

1515.67
292+00

1514.92
291+50

1514.95
291+00

1508.0

291+00 End Project F010-1(18)
Begin Approach

1500
1500
1500
1500
1500

1:4
1:4
1:3
3:5

292+50
4' 11' 11' 4'
292+00
4' 11' 11' 4'
6 11.5 11.5 6
150
8' 12' 12' 8'
291+00

Approach Taper Detail

+0.08 Ft. Lt. E. of Pavement LT. EDGE
LT. & RT. EDGE -0.021
LT. & RT. Shld. -0.063
-.021 Ft/Ft
-.063 Ft/Ft
-.038 Ft/Ft
-.059 Ft/Ft
-.011 Ft/Ft
289 290 291 292
MATCH EXISTING SHOULDER X SLOPE
LT. Shld. -0.011
Rt. Shld.
E. of Pavement -0.038 Ft/Ft.*
RT. EDGE + SHLD.
30'
-.059 Ft/Ft

Banking Diagram

*Note: Match Existing Cross Slope: Designed Cross Slope Was Determined Simply From The Cross Sections, Therefore Designed Banking Is Only Approximate, And Must Be Verified By The Engineer.

290+75 RT.
END MANUFACTURED TERMINAL SECTION - Flared

PLATE 3. CROSS SECTION
KELLER & GIBBS CO.

SHEET 422 OF 435

FINAL SURVEY NOTE BOOK NO.
SURVEYED PLOTTED TEMPLATE AREAS AREAS CHECKED
BY DATE

ORIGINAL SURVEY NOTE BOOK NO.
SURVEYED PLOTTED TEMPLATE AREAS AREAS CHECKED
BY DATE

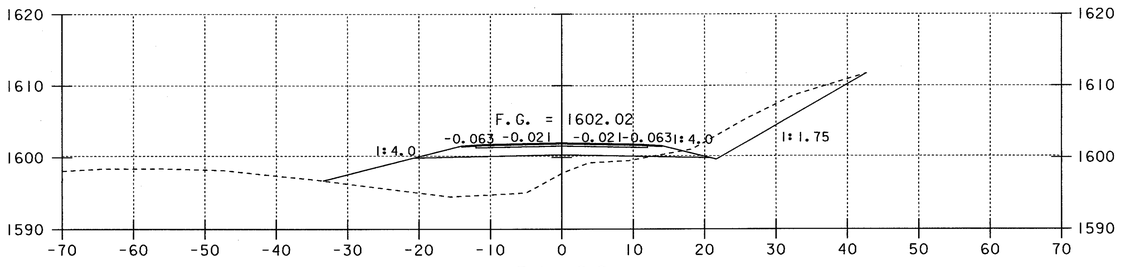

21+00

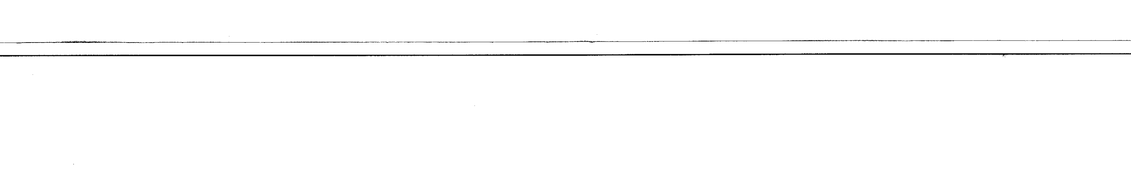

20+50

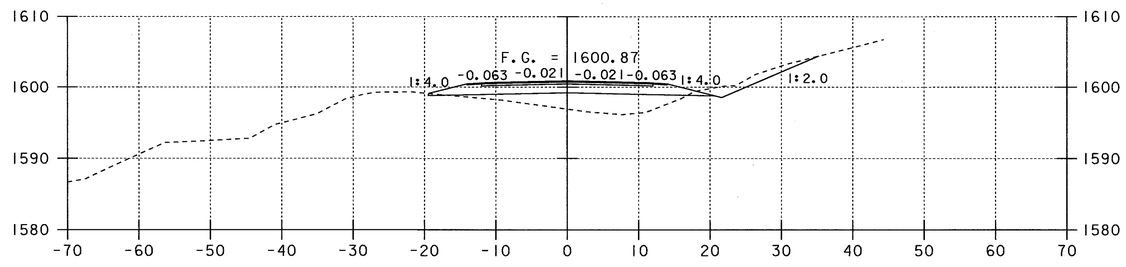

22+50

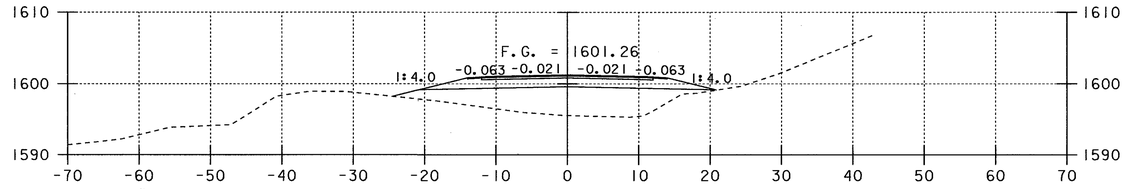

22+00

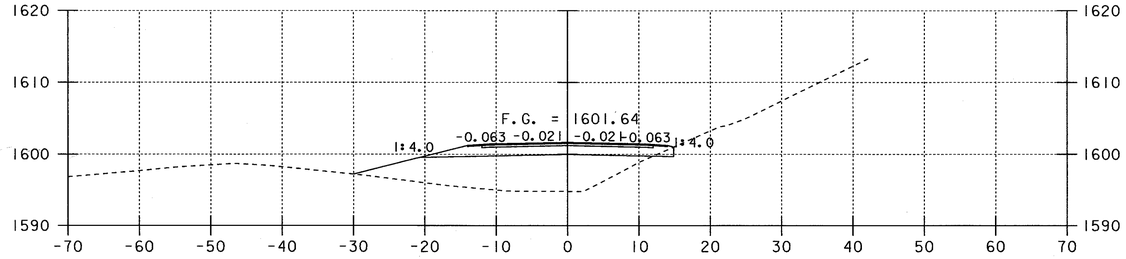

21+50

WEST CONNECTOR CROSS SECTIONS

0 10 20
SCALE IN FEET

PROJECT NAME: SEARSBURG - WILMINGTON
PROJECT NUMBER: NHF 010-1(18)

PLOT FILE NAME: DD096X28
PLOT DATE: 25-OCT-2001
PROJECT LEADER: DELLA SANTA
DRAWN BY: SQUAD B
DESIGN FILE NAME: 78D096/DESIGN/DD096CWRK.DGN:
SHEET 428 OF 435

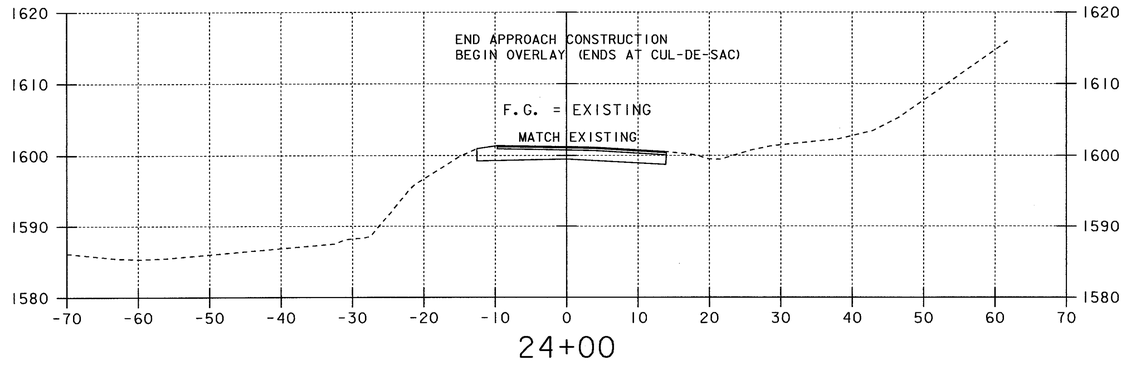

24+00

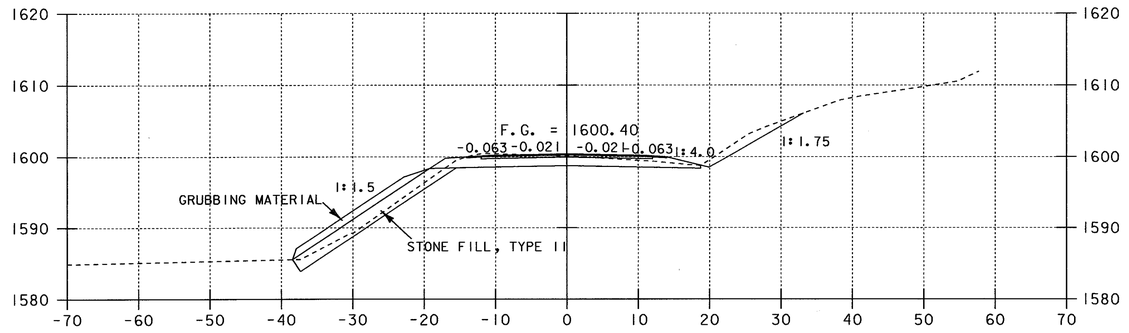

23+50

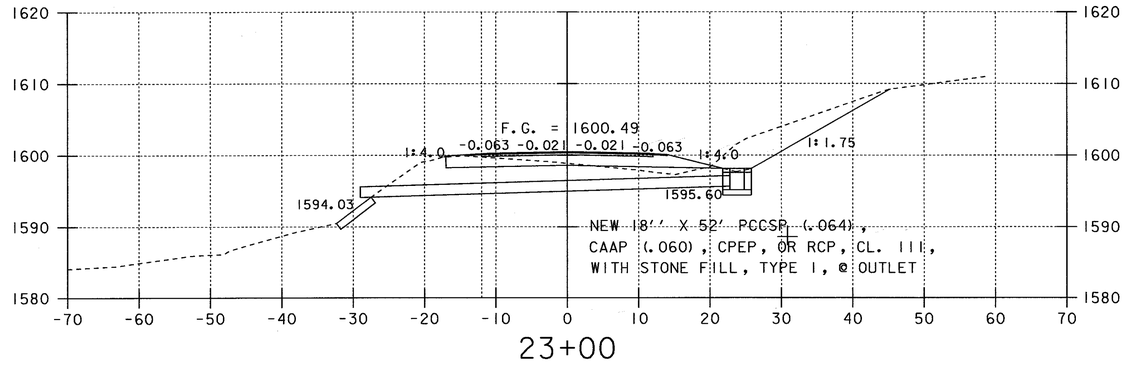

23+00

WEST CONNECTOR CROSS SECTIONS

0 10 20
SCALE IN FEET

PROJECT NAME:	SEARSBURG - WILMINGTON
PROJECT NUMBER:	NHF 010-1(18)
PLOT FILE NAME: DD096X29	PLOT DATE: 25-OCT-2001
PROJECT LEADER: DELLA SANTA	DRAWN BY: SQUAD B
DESIGN FILE NAME: 78D096/DESIGN/DD096CWRK.DGN:	
	SHEET 429 OF 435

SEARSBURG – WILMINGTON
NH F 010-1 (18)
EAST CONNECTOR 10+20 - 10+50
SHEET 430 OF 435

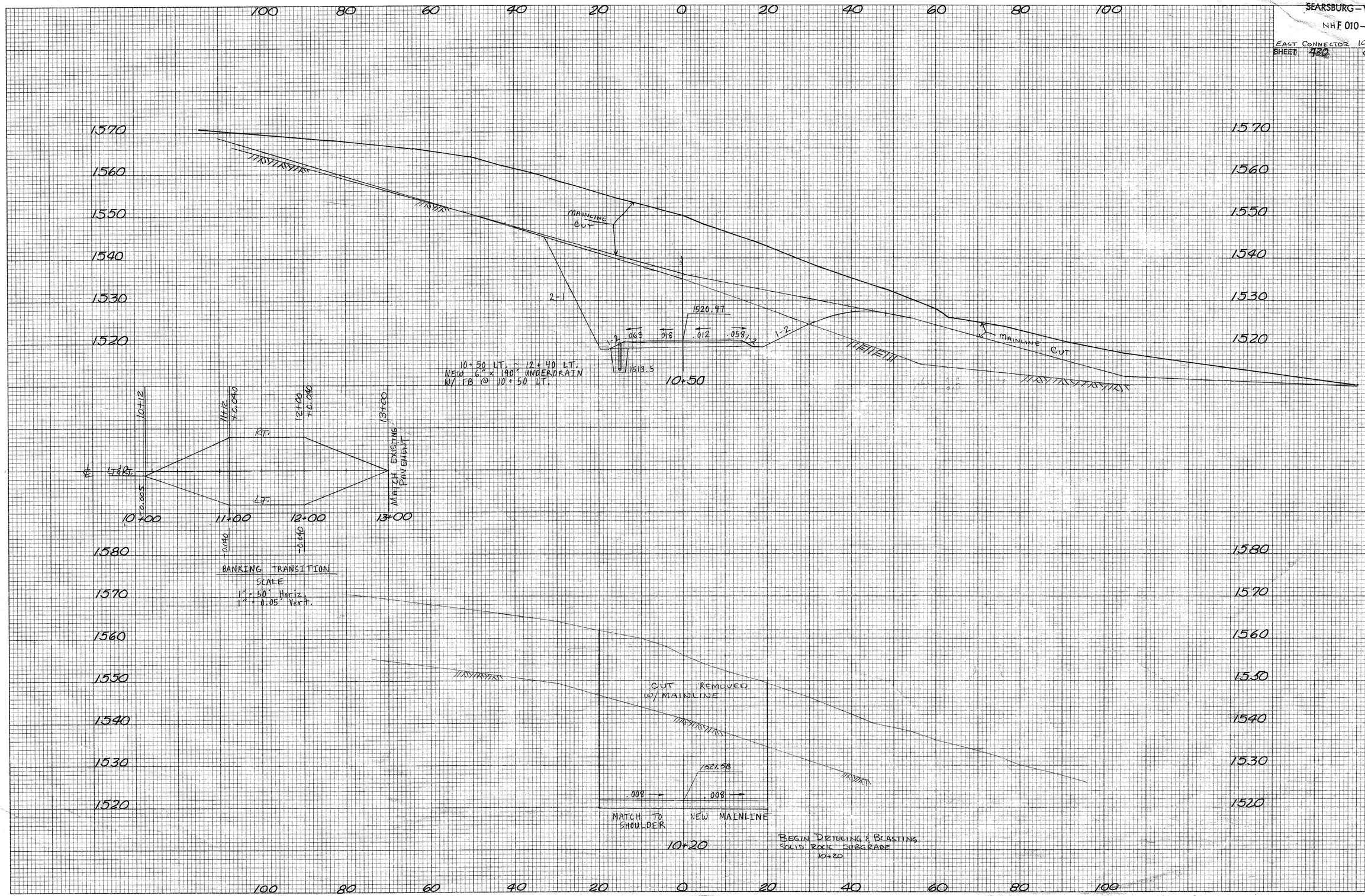

FINAL SURVEY | NOTE BOOK | NO. | SURVEYED | PLOTTED | TEMPLATE | AREAS | AREAS CHECKED | BY | DATE

ORIGINAL SURVEY | NOTE BOOK | NO. | SURVEYED | PLOTTED | TEMPLATE | AREAS | AREAS CHECKED | BY | DATE

KEUFFEL & ESSER | PLATE 3, CROSS SECTION

East Connector Route 9 Sta 254+50
SHEET 430 OF 435

SEARSBURG – WILMINGTON
NHF 010–1 (18)
EAST CONNECTOR 11+00 – 11+50
SHEET 431 OF 435

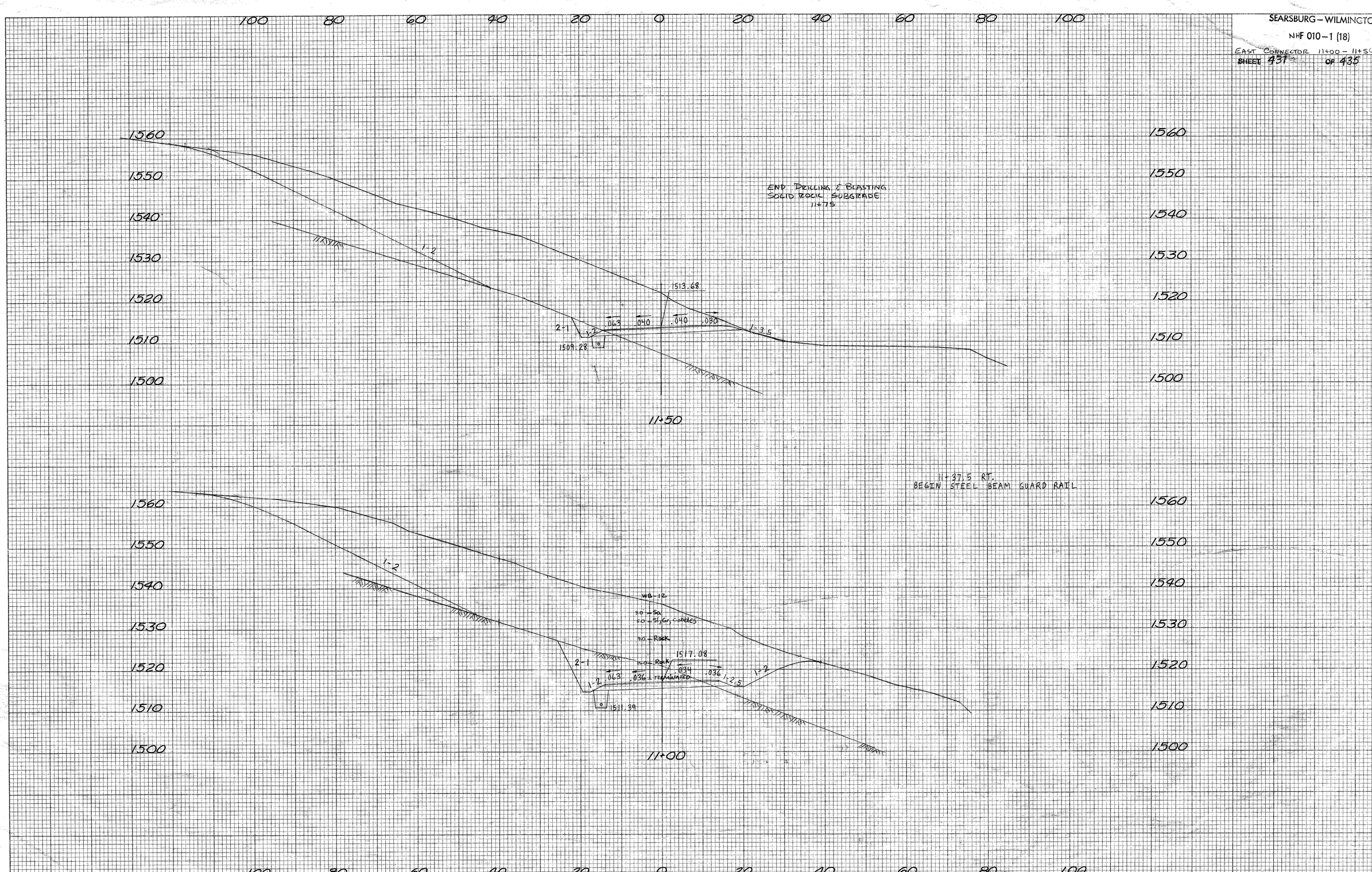

FINAL SURVEY		BY	DATE
NOTE BOOK	SURVEYED		
	PLOTTED		
	TEMPLATE		
	AREAS		
NO.	AREAS CHECKED		

ORIGINAL SURVEY		BY	DATE
NOTE BOOK	SURVEYED		
	PLOTTED		
	TEMPLATE		
	AREAS		
NO.	AREAS CHECKED		

KEUFFEL & ESSER
A KIMLEY-HORN Company
PLATE 3, CROSS SECTION

East Connector

SEARSBURG – WILMINGTON
NH F 010-1 (18)
E. CONN. 12+00 - 13+00
SHEET 432 OF 435

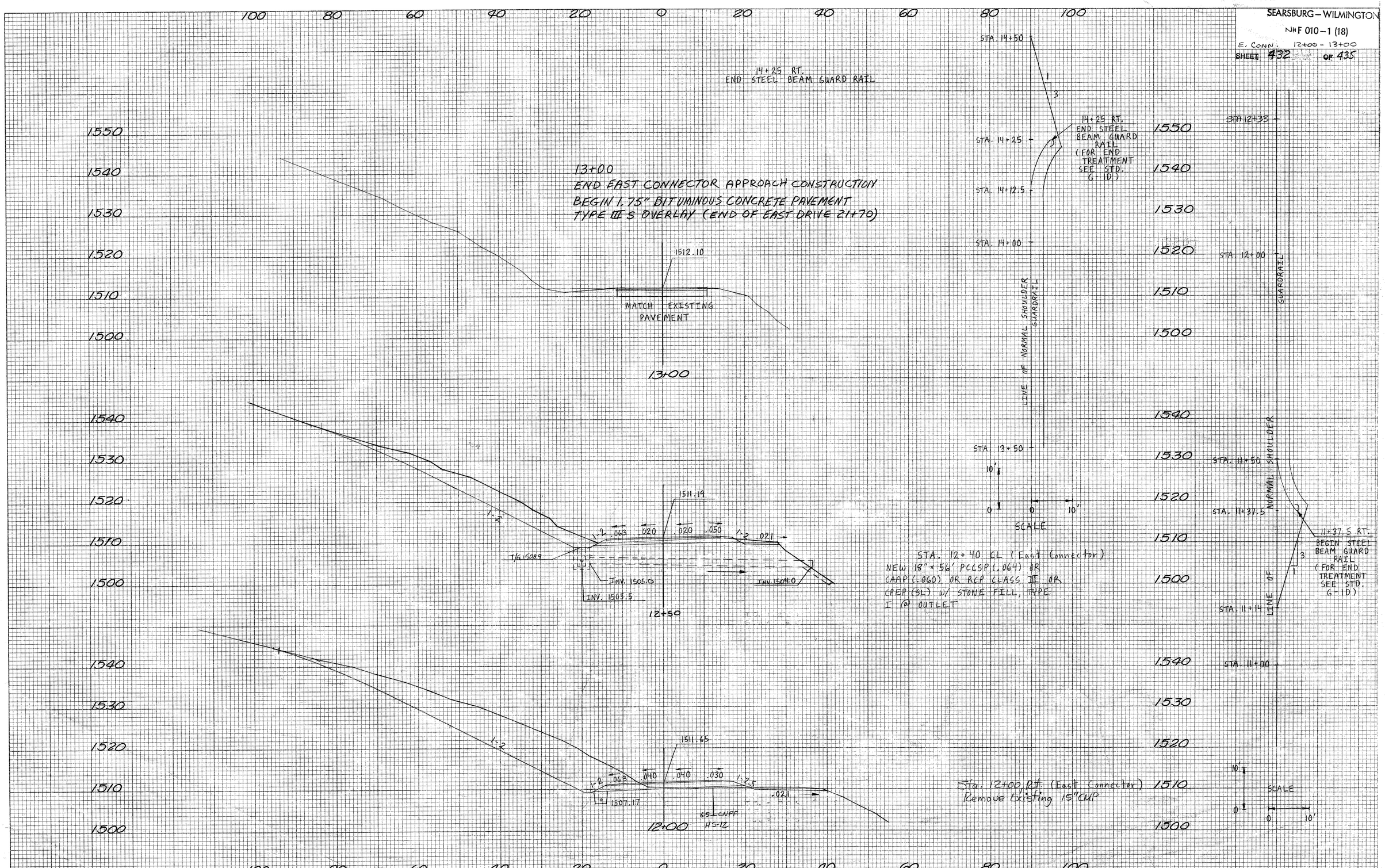

FINAL SURVEY
NOTE BOOK NO.
SURVEYED
PLOTTED
TEMPLATE
AREAS
AREAS CHECKED
BY
DATE

ORIGINAL SURVEY
NOTE BOOK NO.
SURVEYED
PLOTTED
TEMPLATE
AREAS
AREAS CHECKED
BY
DATE

SEARSBURG – WILMINGTON
NHF 010-1 (18)
E. DRIVE CONN. 20+20 – 21+50
SHEET 433 OF 435

FINAL SURVEY
SURVEYED
PLOTTED
NOTE BOOK
AREAS
AREAS CHECKED
NO.
BY
DATE

ORIGINAL SURVEY
SURVEYED
PLOTTED
NOTE BOOK
AREAS
AREAS CHECKED
NO.
BY
DATE

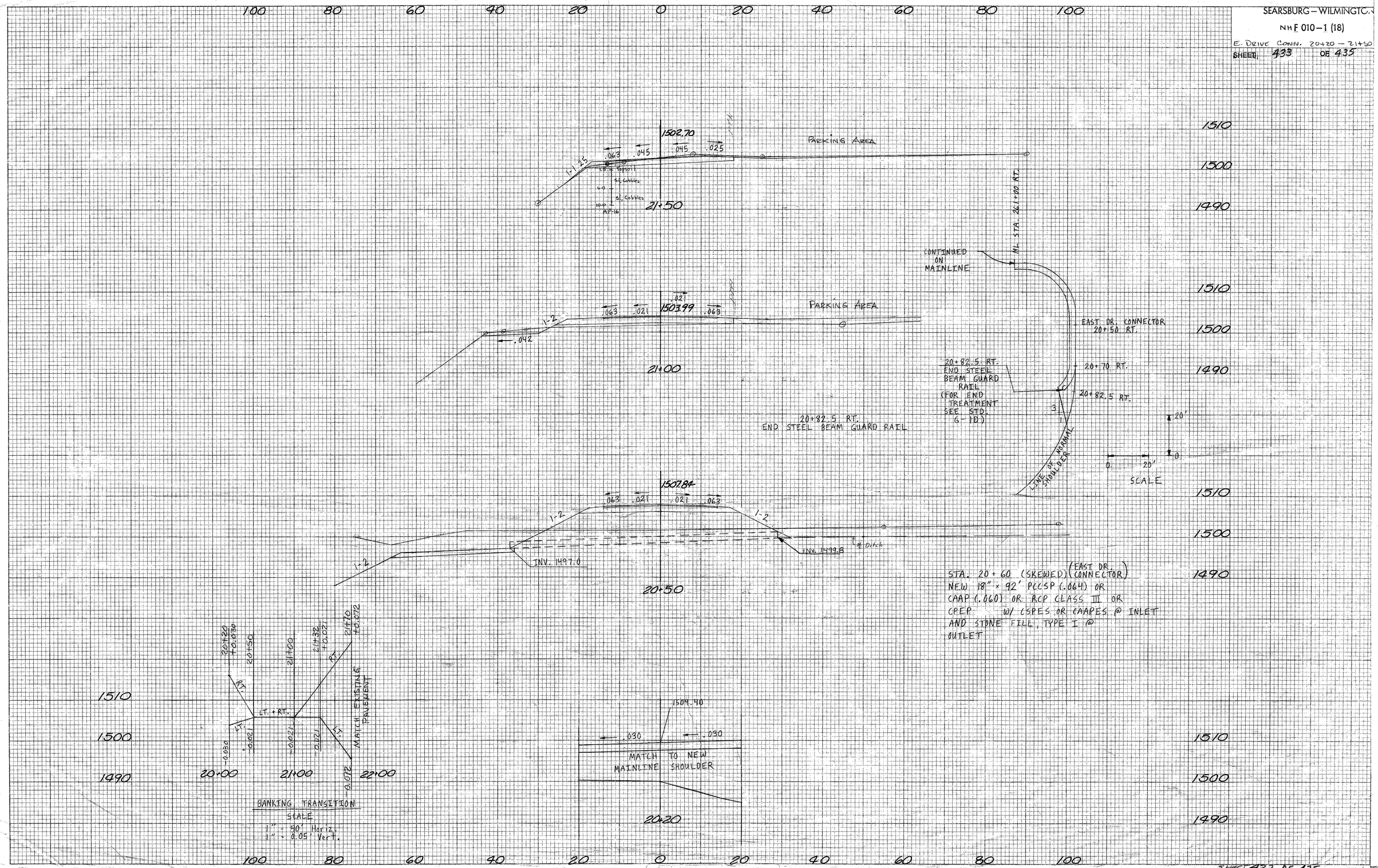

KEUFFEL & ESSER A STATCO Company PLATE 3, CROSS SECTION

SHEET 432 OF 435
Drive East Rte 9 Connector at Sta. 261+50

SEARSBURG – WILMINGTON

NHE 010-1 (18)

E. DRIVE CONN. 21+70

SHEET 434 OF 435

FINAL SURVEY
NOTE BOOK
NO.

SURVEYED
PLOTTED
TEMPLATE
AREAS
AREAS CHECKED

BY

DATE

ORIGINAL SURVEY
NOTE BOOK
NO.

SURVEYED
PLOTTED
TEMPLATE
AREAS
AREAS CHECKED

BY

DATE

21+70 EAST CONNECTOR
OVERLAY ENDS

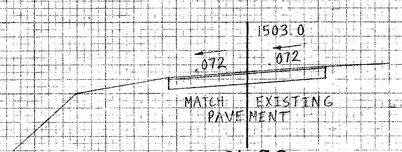

1510
1500
1490

100 80 60 40 20 ℄ 20 40 60 80 100

1510
1500
1490

KEUFFEL & ESSER PLATE 5 CROSS SECTION

SHEET 434 OF 435
Drive East Rte 9 Connector at Sta 21+70

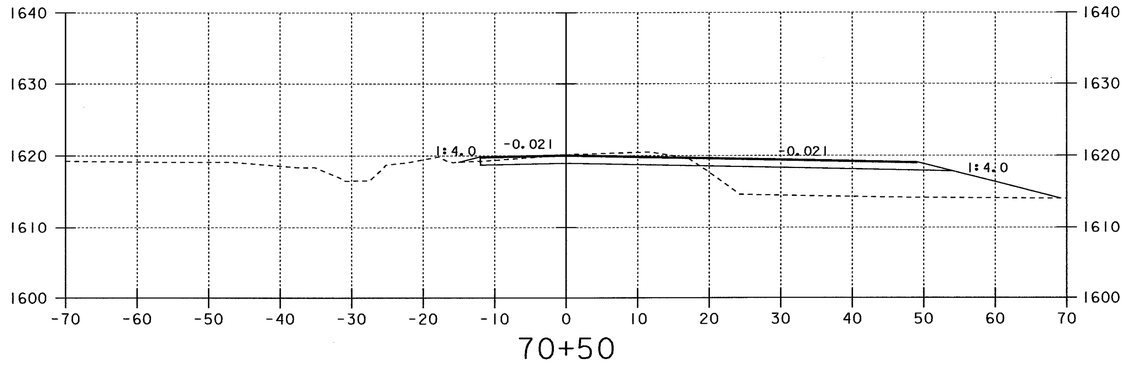

70+50

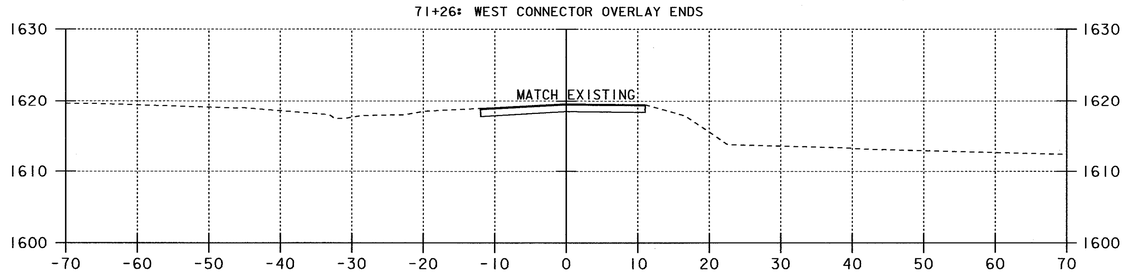

71+26

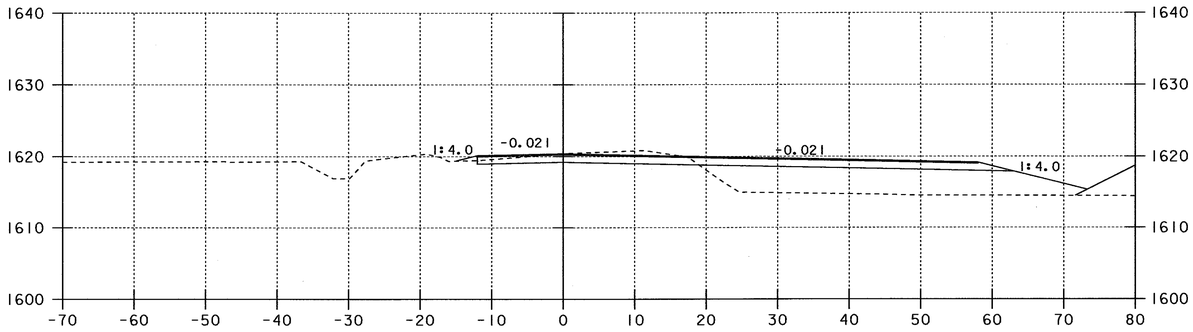

70+25

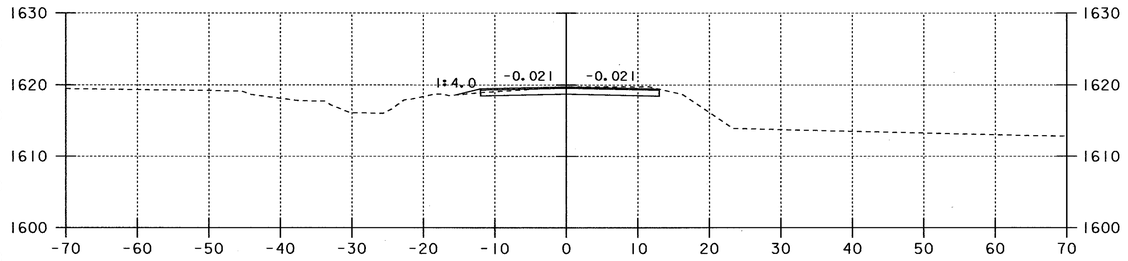

71+00

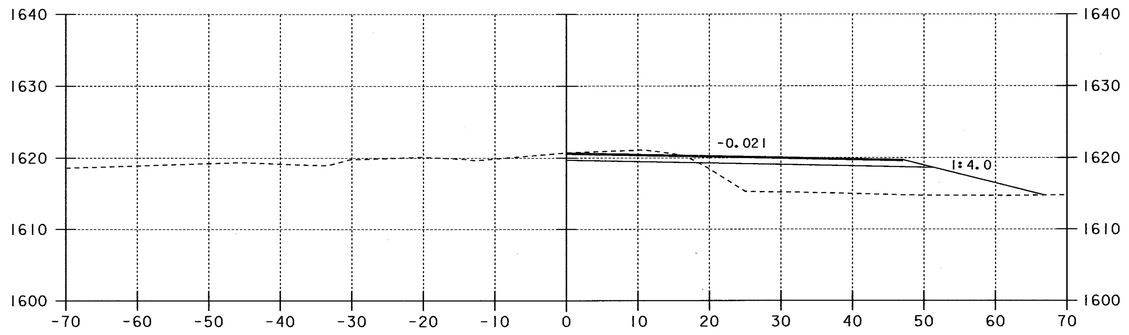

70+00

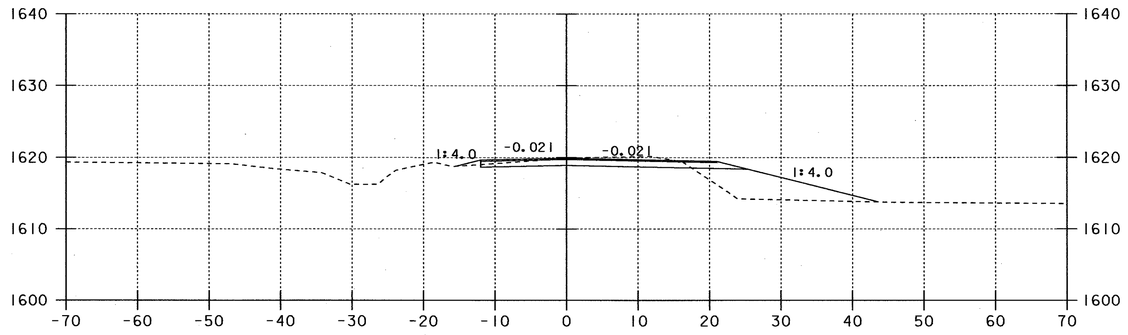

70+75

CUL-DE-SAC

MATCH EXISTING GRADE

0 10 20
SCALE IN FEET

PROJECT NAME:	SEARSBURG - WILMINGTON
PROJECT NUMBER:	NHF 010-1(18)
PLOT FILE NAME: DD096CUL	PLOT DATE: 12-JAN-2002
PROJECT LEADER: DELLA SANTA	DRAWN BY: SQUAD B
DESIGN FILE NAME: 78D096/DESIGN/DD096CWRK.DGN:	
	SHEET 435 OF 435