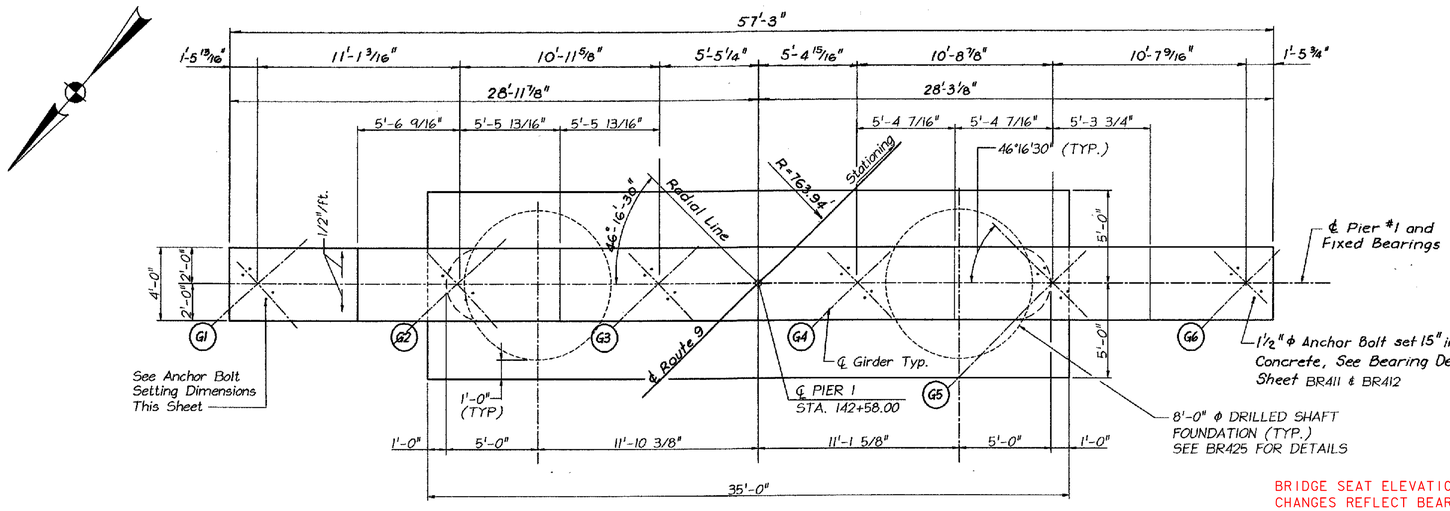

PLAN
Scale: 1/4" = 1'-0"

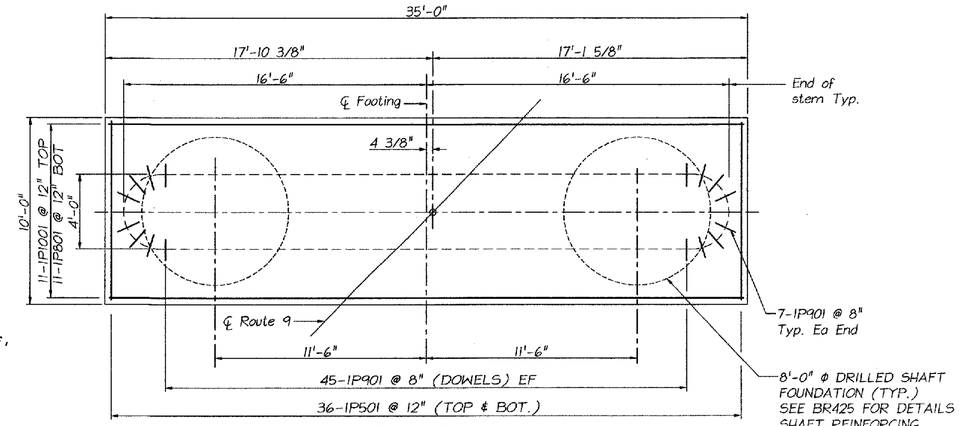

FOOTING PLAN
Scale: 1/4" = 1'-0"

BRIDGE SEAT ELEVATION CHANGES REFLECT BEARING DESIGN CHANGE FROM STRUCTURES.

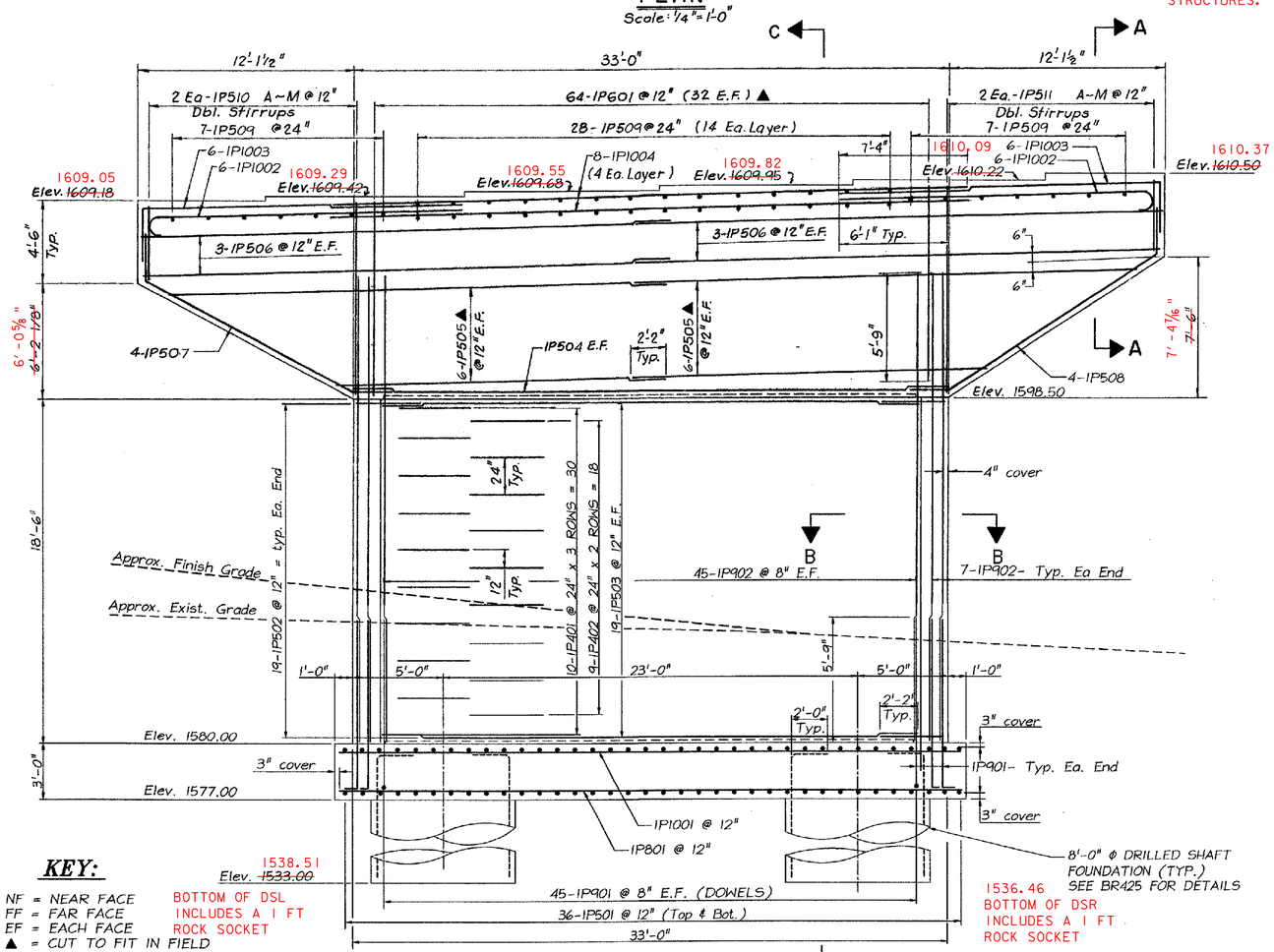

ELEVATION
Scale: 1/4" = 1'-0"

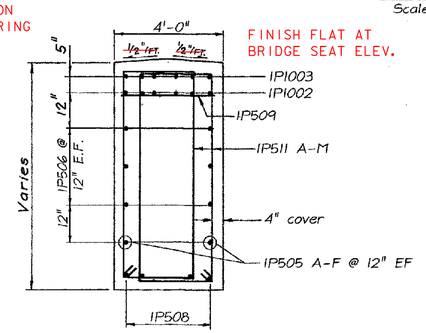

SECTION A-A
(NOT TO SCALE)

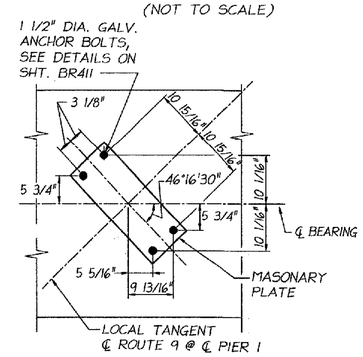

PLAN-ANCHOR BOLT LAYOUT
(NOT TO SCALE)

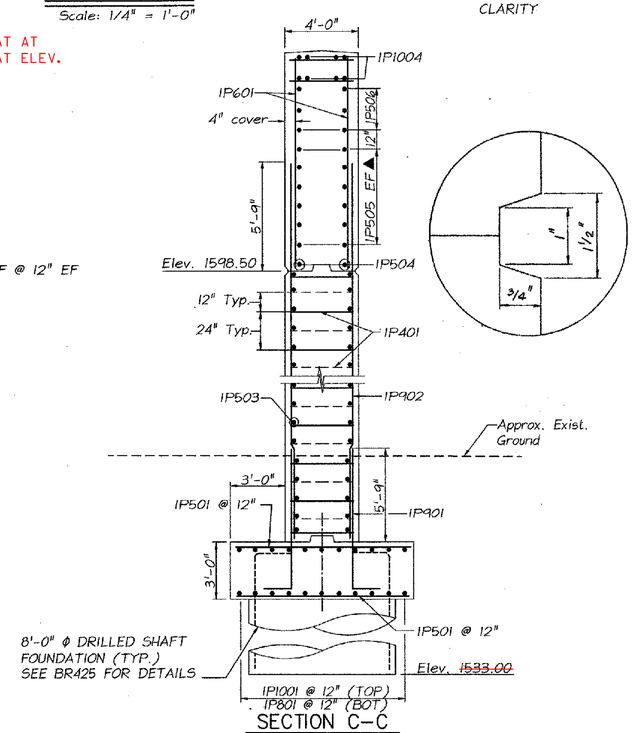

SECTION C-C
Scale 1/4"=1'-0"
Piers 1 Shown Pier 2 Similar

KEY:

NF = NEAR FACE
FF = FAR FACE
EF = EACH FACE
▲ = CUT TO FIT IN FIELD
3" CLR. UNLESS OTHERWISE SPECIFIED ON THE PLANS.

NOTES:

1. Major Chord not shown on plan. For Major Chord Layout, see sheet BR406.
2. Adjust horizontal spacing of 1P1002, 1P1003 & 1P1004 to provide clearance for cast-in place anchor bolts.
3. For Section B-B See BR424.

Revisions: by CLOUGH HARBOUR & ASSOC. LLP	App'd. By:	Date:
⚠ PIER FOUNDATION, STEM AND ELEVATIONS REVISED	MWO	6/01

McFARLAND-JOHNSON ENGINEERS, INC.

STATE OF VERMONT
AGENCY OF TRANSPORTATION

Town Of SEARSBURG	Bridge No. 25B
Highway No. VT. ROUTE 9	Log Sta. / Surv. Sta. 143+11
VT. ROUTE 9 OVER DEERFIELD RIVER	
PIER 1 PLAN AND ELEVATION	
Designed By RPJ	Drawn By JJM
Checked By RPJ Date 11-85	Bridge Design Supervisor WTS Date 9/85
PROJECT SEARSBURG-WILMINGTON	PROJECT NO. F010-1 (18)
I.C.C. Info.	
Bridge Sheet No. BR423	Sheet 229 of 435

M.J. Job No. 83-3302.0
M.J. Br. No. 2
M.J. Sht. No. 40

DRUNING 62165