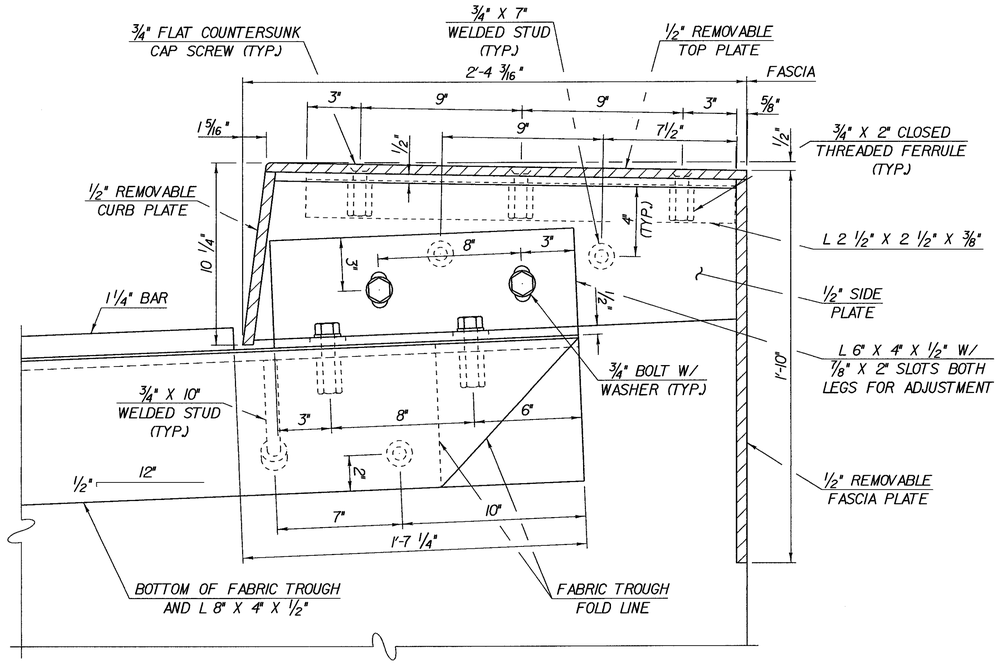

VIEW C - C

SCALE: 3" = 1'-0"

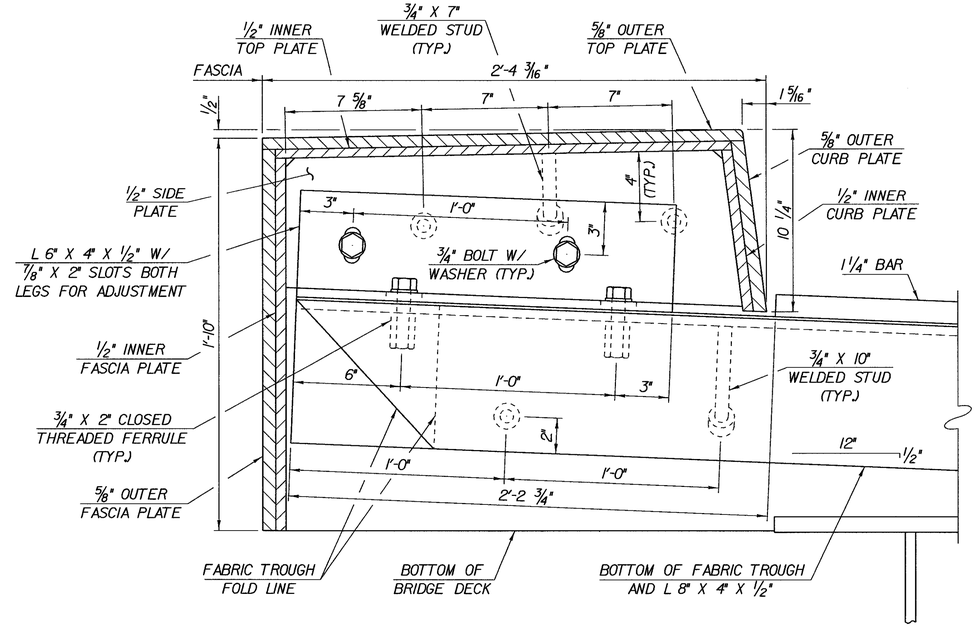

VIEW D - D

SCALE: 3" = 1'-0"

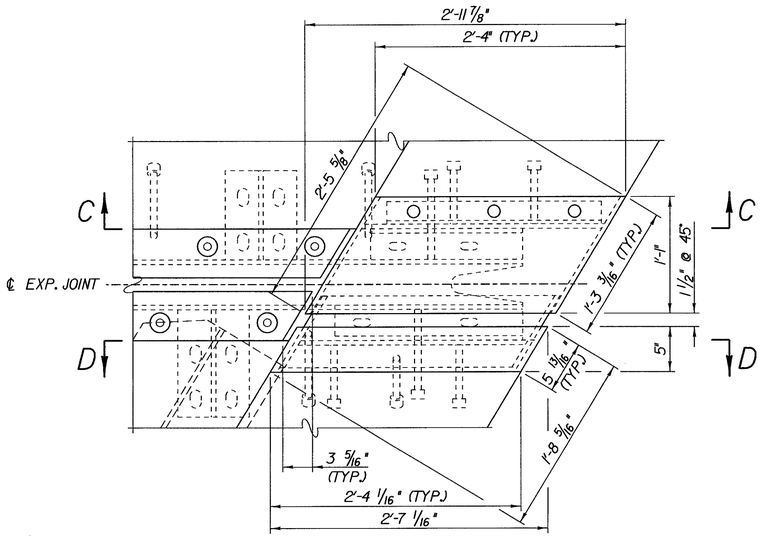

LEFT CURB PLAN @ EXPANSION JOINT

SCALE: 1 1/2" = 1'-0"

STATE OF VERMONT
AGENCY OF TRANSPORTATION

Town Of SEARSBURG-WILMINGTON	Bridge No. 25B
Highway No. VT. ROUTE 9	Log Sta. / Surv. Sta.
VT. ROUTE 9 OVER THE DEERFIELD RIVER	
RIGHT CURB PLATE DETAILS - BR 25B	
Designed By G. ROY	Drawn By G. ROY
Checked By R. WHITCOMB Date 2/02	Bridge Design Supervisor R. R. WHITCOMB Date 2/02
PROJECT SEARSBURG-WILMINGTON	PROJECT NO. NHF 010 - 1 (18)
I.G.C. Info. 78d096\Structures\sd096exp.dgn	sd096rcdJ
Bridge Sheet No. BR.409B	Sheet 214 of 435

PLOTTED 28-FEB-2002