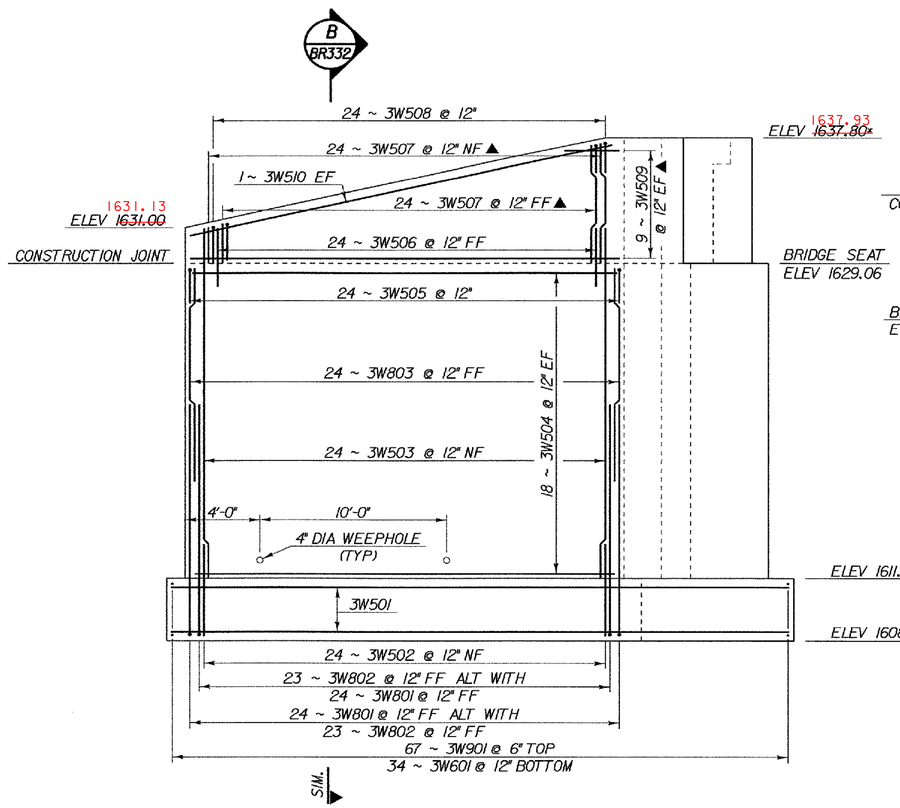

WINGWALL 3

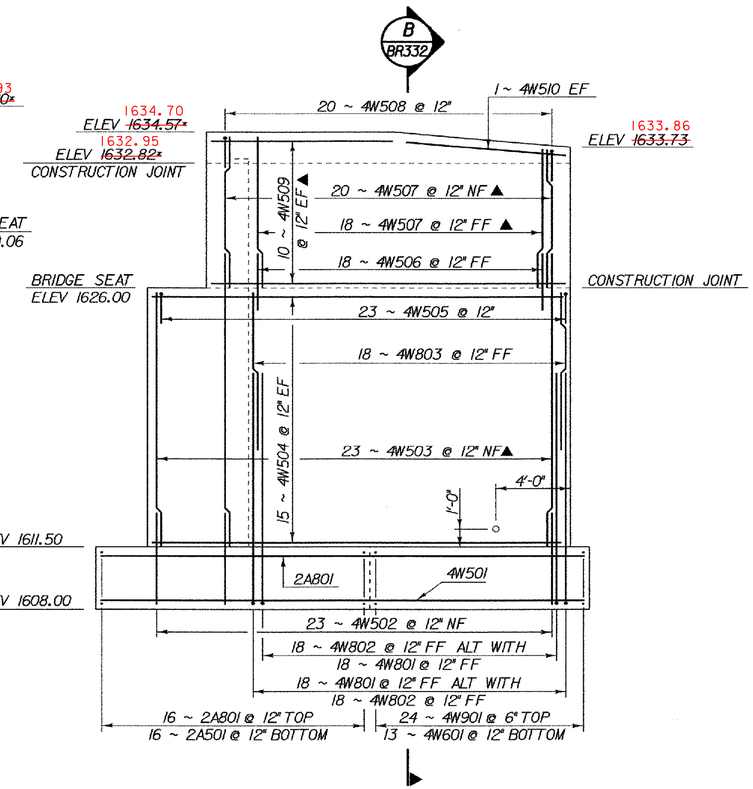

WINGWALL 4

ABUTMENT 2 WINGWALL REINFORCING ELEVATIONS - BR 25A

SCALE 1/4" = 1'-0

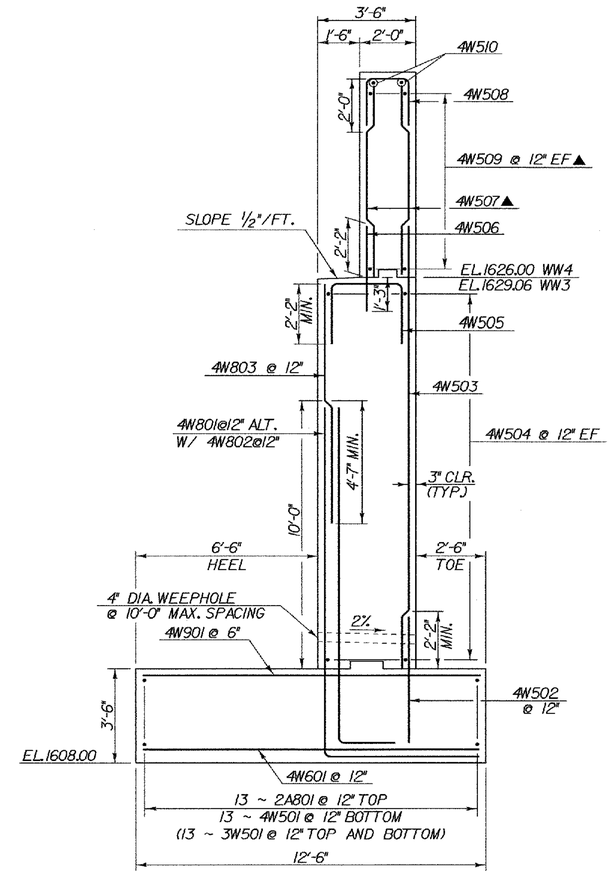

B BR328 TYPICAL WINGWALL SECTION - BR 25A

(WW 4 SHOWN, WW 3 SIMILAR)

SCALE 3/8" = 1'-0

NOTE:

NF = NEAR FACE
FF = FAR FACE
EF = EACH FACE
▲ = CUT TO FIT IN FIELD
3" CLR. UNLESS OTHERWISE SPECIFIED ON THE PLANS.

* ELEVATIONS ARE APPROXIMATE, USED FOR ESTIMATING PURPOSES ONLY. ALL TOP OF BACKWALL ELEVATIONS WILL BE DETERMINED AFTER STRUCTURAL STEEL IS SET.

SHEET NAME: ABUTMENT 2 WINGWALL REINFORCING	
PROJECT NAME: SEARSBURG	HIGHWAY NO.: ROUTE 9
PROJECT NUMBER: NH F 010-1(18)	BRIDGE NO.: 25A
	OVER: THE DEERFIELD RIVER
FILE NAME: /str4/78d096/25a ab2dtsh3.dgn	PLOT DATE: 14-FEB-2003
PROJECT MANAGER: R.WHITCOMB	DRAWN BY: J.GILMORE
DESIGNED BY: CH&A LLP	IPARM NAME: br332
BRIDGE SHEET NUMBER: BR332	SHEET 196 OF 435