STATE OF VERMONT
AGENCY OF TRANSPORTATION

TRAFFIC SIGN SUMMARY SHEET

MILEMARKER, STATION, OR SIGN NUMBER	SIGN LEGEND	SIGN DIMENSIONS EA	WIDTH (in)	HEIGHT (in)	NEW & SALVAGED SIGNS "A"	"B"	SALV SIGN	SALV TIS	EXIST POST RETAIN	SALVAGE	NEW SIGN POSTS NO. OF POSTS	FLANGED CHANNEL lb/ft 1.12	2.0	3.0	SQUARE STEEL (in) lb/ft 1.75	2.0	2.5	1.88	2.16	3.35	ANCHOR	SLEEVE	TUBULAR ALUMINUM Ø (in) lb/ft 3.0	4.0	4.0 MOD	1.3	1.7	1.7	TUBULAR STEEL Ø (in) FOUND-ATION	3.0	3.5	4.0	5.0	7.6	9.0	10.8	14.6	W-SHAPE STEEL FTG. SIZE 24"	30"	WEIGHT	POST SIZE	SIGN REQUIRED	REMARKS	SIGN DETAIL DETAIL ON SHEET NUMBER	STD. SHEET NUMBER
ROUTE 9 EAST CONNECTOR												OPTION ITEMS																																	
10+20 RT.	LEGAL LOAD LIMIT 24,000 POUNDS	1	24"	30"	5						1			×																														VR-017		E-141
10+20 LT.	STOP	1	30"	30"	6.25						1			×																														R1-1		E-143
OLD RT. 9	PROHIBITED OVERNIGHT CAMPING UNATTENDED VEHICLES COMMERCIAL ENTERPRISES	1	30"	24"	5						1			×																														VR-032	SEE SHT.86	E-144
OLD RT. 9	PROHIBITED OVERNIGHT CAMPING UNATTENDED VEHICLES COMMERCIAL ENTERPRISES	1	30"	24"	5						1			×																														VR-032	SEE SHT.86	E-144
	EAST DRIVE CONNECTOR																																												
20+20 RT.	LEGAL LOAD LIMIT 24,000 POUNDS	1	24"	30"	5						1			×																														VR-017		E-141
20+20 LT.	STOP	1	30"	30"	6.25						1			×																														R1-1		E-143
ENTRANCE CATAMOUNT TRAIL	NO MOTOR VEHICLES / NO MOTOR VEHICLES	2	24"	24"	8						2			×																														POST TO BE PLACED LT. & RT. AT ENTRANCE OF CATAMOUNT TRAIL.	SEE SHT.92	

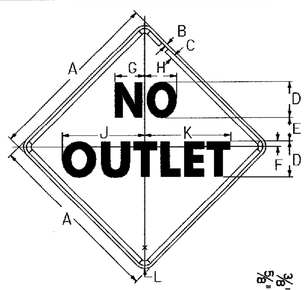

W14-2

SIGN	DIMENSIONS (INCHES) A	B	C	D	E	F	G	H	J	K	L
MIN.	24	3/8	5/8	5D	3	3/4	4 1/8	4 1/2	11 5/8	12 1/16	1 1/2
STD.	30	1/2	3/4	6D	4	15/16	5	5 3/8	13 15/16	14 1/2	1 7/8
SPEC.	36	5/8	7/8	7D	5	1 1/8	5 7/8	6 1/4	16 1/4	16 15/16	2 1/4

COLORS
LEGEND - BLACK (NON-REFL)
BACKROUND - YELLOW (REFL)

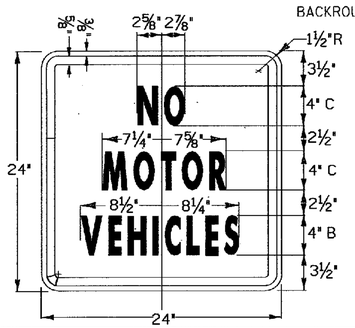

R5-3
COLORS
BLACK TEXT & BORDER
WITH WHITE BACKGROUND

FINAL POST LENGTHS ARE TO BE DETERMINED IN THE FIELD. POST SIZES ARE COMPUTED BASED ON INFORMATION FURNISHED ON THE STANDARD SHEETS AND THE TRAFFIC & SAFETY DIVISION'S "SIGN POST DESIGN GUIDELINE."

	SF	SF	EA.	SF	FT	FT	FT	FT	FT	FT	EA	LB	LB	LB	LB	LB	LB	LB	EA.	EA.	LB
							78.0														
SHEET TOTALS	40.50						78.0														
GRAND TOTALS	191.59						~~351.0~~ 472.5														

dd096.dgn

PROJECT NAME: SEARSBURG - WILMINGTON
PROJECT NUMBER: NHF 010-1(18)

FILE NAME: dd096ts4.1
PROJECT LEADER: DELLA SANTA
DESIGNED BY: SQUAD B
PLOT DATE: 16-FEB-2002
DRAWN BY: G. MEUNIER
CHECKED BY:
SHEET 92 OF 435