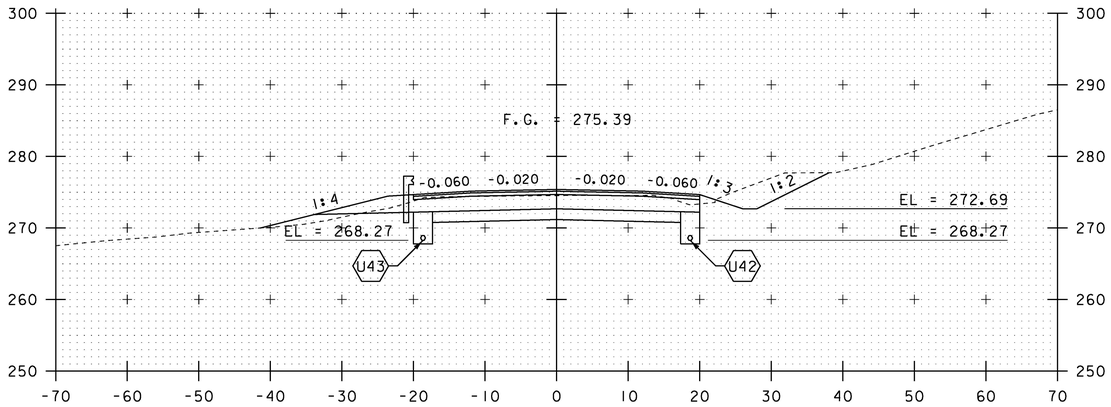


125+00

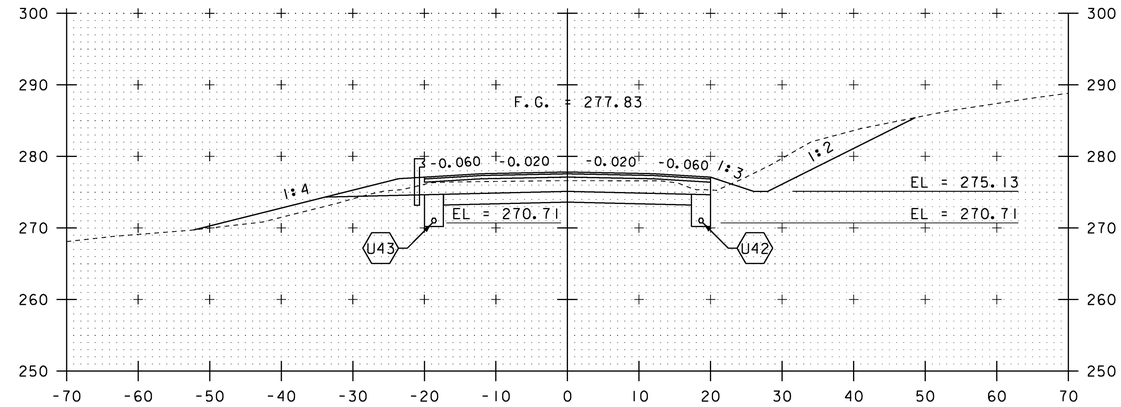


126+00

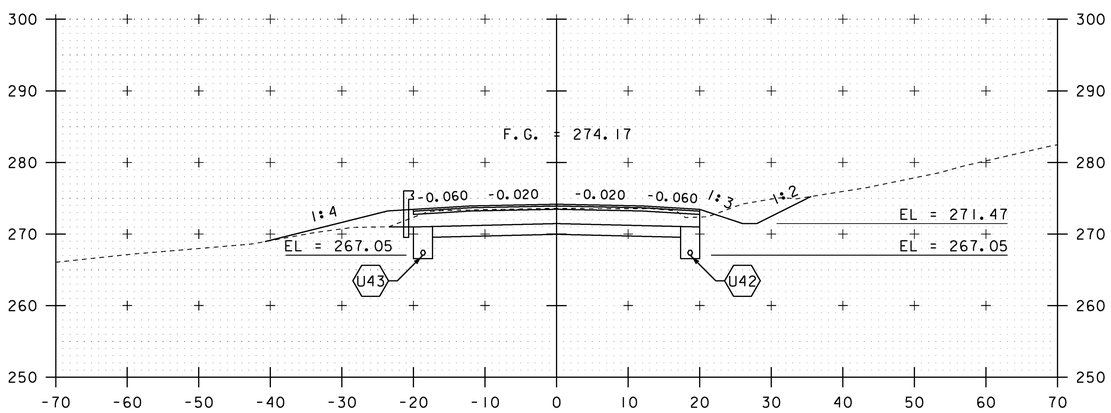


124+50

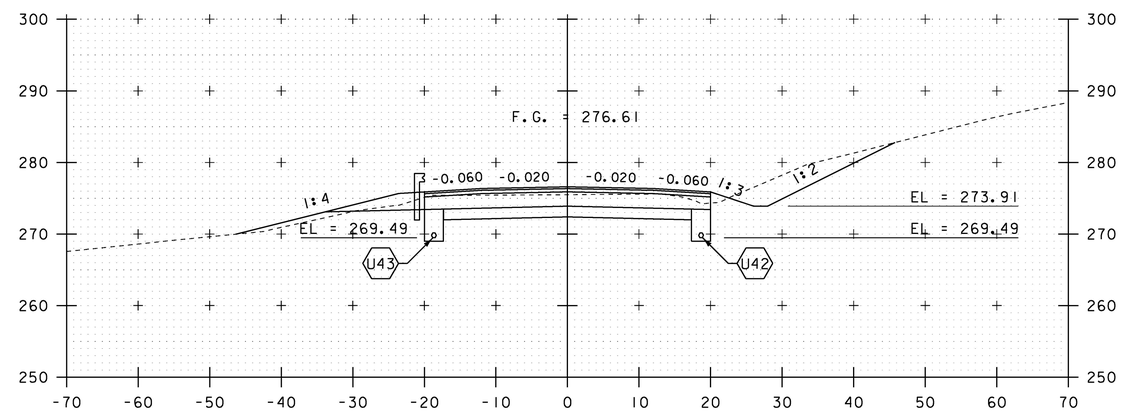


125+50

SCALE IN FEET

STA. 124+50 TO STA. 126+00

| | |
|---|---|
| PROJECT NAME: CHARLOTTE | |
| PROJECT NUMBER: F EGC 019-4(20) | |
| FILE NAME: d78d062_xs.dgn | PLOT DATE: 15-MAR-2016 |
| PROJECT LEADER: K. UPMAL | DRAWN BY: B. KIPP |
| DESIGNED BY: B. KIPP | CHECKED BY: C. LEACH |
| MAINLINE CROSS SECTIONS 63 | SHEET 340 OF 499 |