METRIC

METRIC

1. ALL DIMENSIONS ARE IN MILLIMETERS UNLESS OTHERWISE NOTED.
2. ALL WEIGHTS ARE IN KILOGRAMS.

FED. ROAD DIV. NO.	STATE	FED. AID PROJ. NO.
	VT	

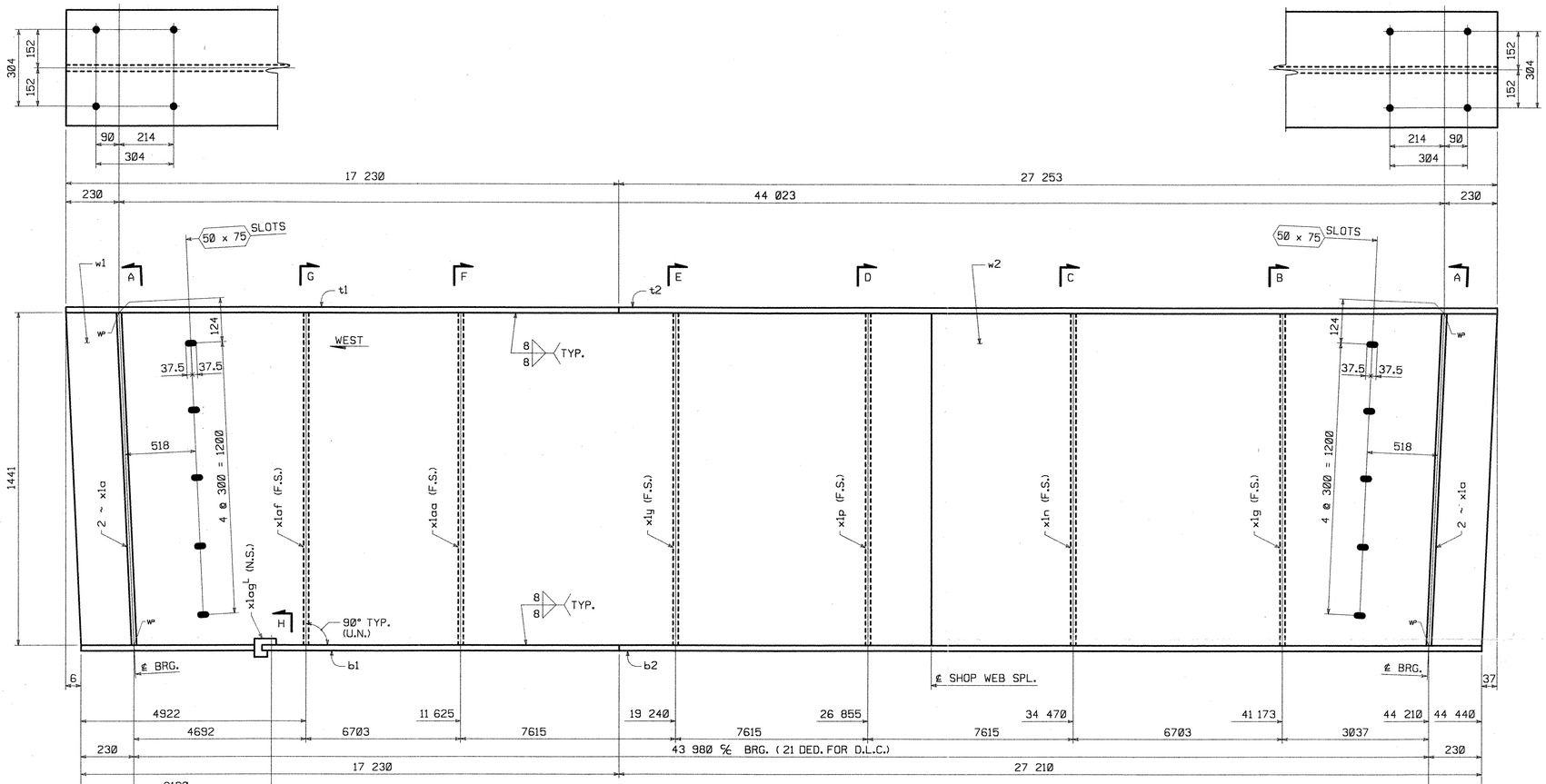

GIRDER MK. ~ G5A

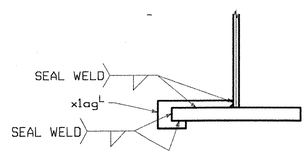

SECTION H

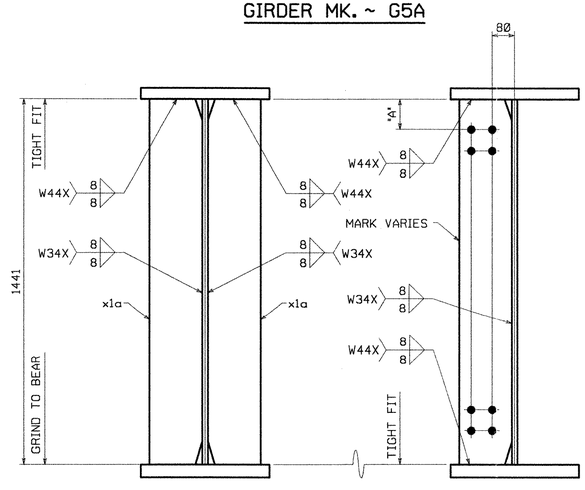

SECTION A

SECTIONS B THRU G

SECT.	"A"
B	118
C	110
D	108
E	100
F	98
G	90

SHOP NOTE

HOLES: 24ø (U.N.)

BOLTS: NONE

PAINT: NONE

FOR GENERAL SHOP NOTES, SEE DWG. GN1.
FOR WEB CAMBER DIAGRAM, SEE DWG. WC1.

BILL OF MATERIAL

NO.	MARK	DESCRIPTION	LENGTH	REMARKS	ITEM	SHIP. WEIGHT EA.
ONE	G5A	GIRDER			/	23 725kg
1	w1	ℙ 1441 x 20	27 243	(T)	1/2	
1	w2	ℙ 1441 x 20	17 243	(T)	1/3	
1	t1	ℙ 458 x 38	17 230	(T)	2/5	
1	t2	ℙ 458 x 38	27 253	(T)	2/4	
1	b1	ℙ 458 x 45	17 230	(T)	2/3	
1	b2	ℙ 458 x 45	27 210	(T)	2/2	
4	x1a	ℙ 188 x 25	1441		3/2	
1	x1g	ℙ 188 x 14	1441		3/3	
1	x1n	ℙ 188 x 14	1441		3/3	
1	x1p	ℙ 188 x 14	1441		3/3	
1	x1y	ℙ 188 x 14	1441		3/3	
1	x1aa	ℙ 188 x 14	1441		3/3	
1	x1af	ℙ 188 x 14	1441		3/3	
1	x1ag^L	ℙ 95 x 7	303		3/4	

RECEIVED
CK'D BY OK'D BY
NOV 16 1999
RESUBMIT APPROVED
BY DATE 12/8/99

NO.	REVISION	BY	DATE
△			
△			
△			

HIGH STEEL STRUCTURES, INC.
1770 Hempstead Road
Lancaster, PA 17605-0008
Phone 717/299-5211
A Division of High Industries, Inc.

GIRDER G5A
VT. 116 OVER NEW HAVEN RIVER
VT. 116 STA. 1+255.00 TO STA. 1+299.00
TOWN OF BRISTOL, BRIDGE NO. 10
STATE OF VERMONT
AGENCY OF TRANSPORTATION

STATE CONTRACT OR REF. NO. PROJECT NO. ER 021-1(13) 07A
CONTRACTOR BECK & BELLUCCI, INC.
IN CHARGE: ALLEN (IH) MADE BY: AGG CHK'D BY: PFH DATE: 11-8-99
CONTRACT NUMBER: VT-99109-1 DRAWING NUMBER: 7 OF 7

CODE:30

PLOTTED: 18 NOV 1999 14:28:36 BY: dshue

99109 X1 11/11/99 11/11/99Approval TO:Vermont Agency Of Transportation Set:4