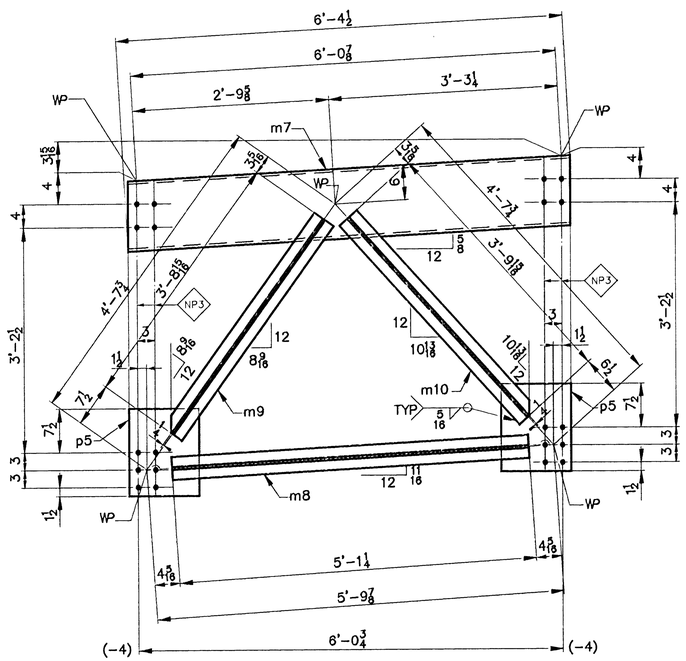

ONE ~ CROSS FRAME ~ F11 ECFSTR

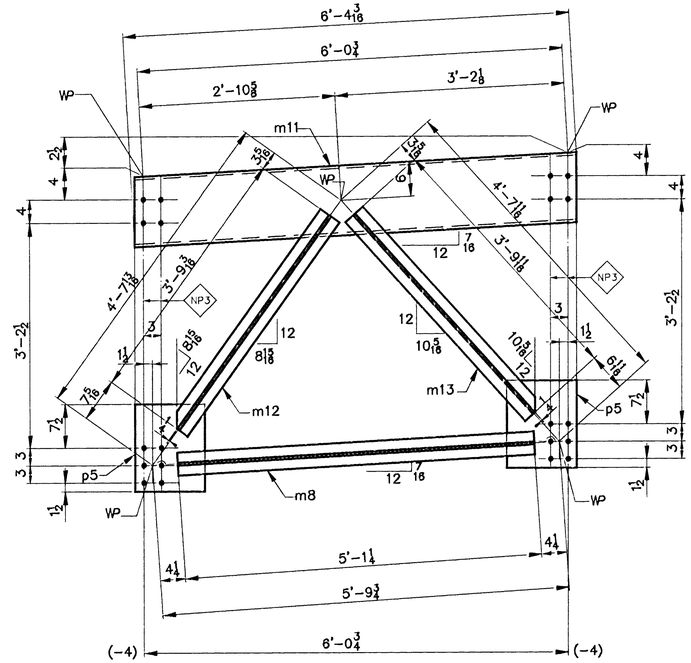

2 ~ CROSS FRAMES ~ F12 ECFSTR

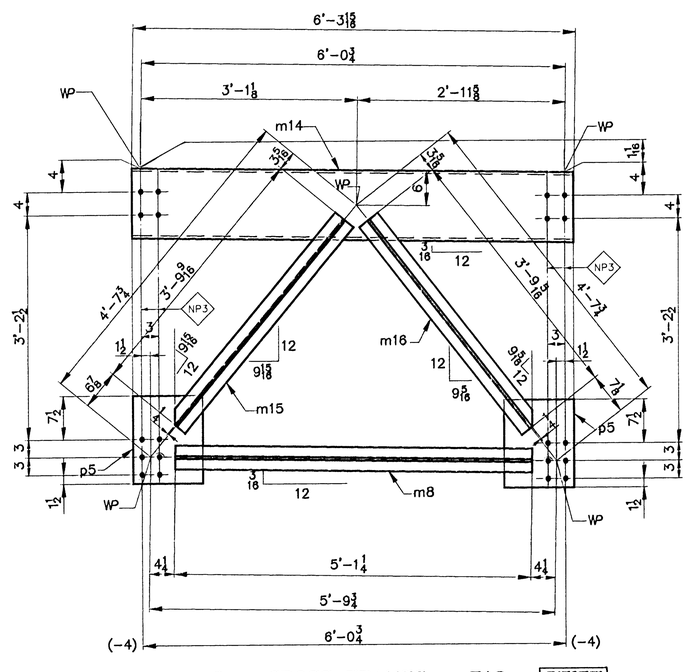

2 ~ CROSS FRAMES ~ F13 ECFSTR

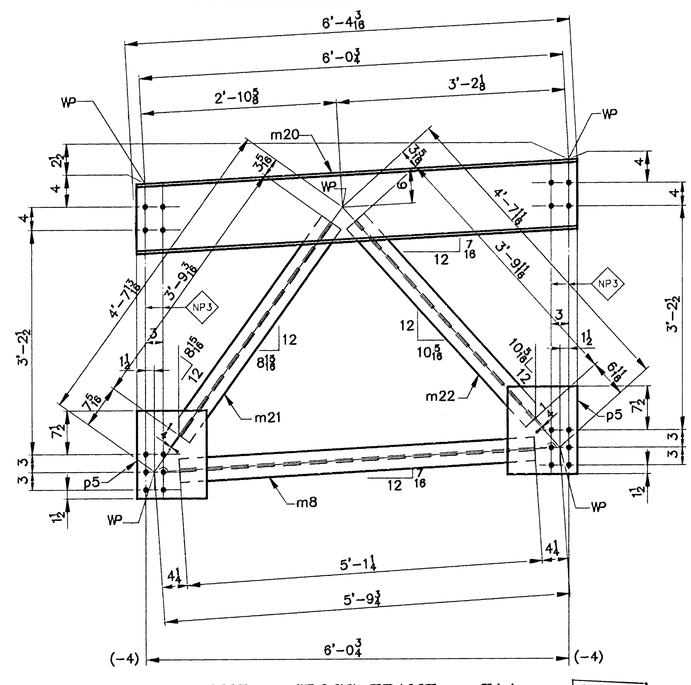

ONE ~ CROSS FRAME ~ F14 ECFSTR

SHIP MARK	BILL OF MATERIAL NO.	MARK	SHAPE	LENGTH			ITEM NO.	WT.	REMARKS
F11	ONE		CROSS FRAMES						
WT-4	1	m7	C12 x 25	6	4 1/2	5-5/8	2/3	159	
L-4-A	1	m8	WT 5 x 9.5	5	1 1/4	5-7/8	2/4	48	5/F W10X19
	1	m9	WT 5 x 9.5	3	8 15/16		2/5	36	
do	1	m10	WT 5 x 9.5	3	9 15/16	do	2/5	36	
L-4-B	2	p5	PL 1/2 x 12	1	3	5-1/16	2/6	51	5/F PL
F12	2		CROSS FRAMES						
WT-4	2	m11	C12 x 25	6	4 3/16	5-5/8	2/3	317	
L-4-A	2	m8	WT 5 x 9.5	5	1 1/4	5-7/8	2/4	97	5/F W10X19
	2	m12	WT 5 x 9.5	3	9 3/16		2/5	72	
do	2	m13	WT 5 x 9.5	3	9 11/16	do	2/5	72	
L-4-B	4	p5	PL 1/2 x 12	1	3	5-1/16	2/6	102	5/F PL
F13	2		CROSS FRAMES						
WT-4	2	m14	C12 x 25	6	3 15/16	5-5/8	2/3	316	
L-4-A	2	m8	WT 5 x 9.5	5	1 1/4	5-7/8	2/4	97	5/F W10X19
	2	m15	WT 5 x 9.5	3	9 9/16		2/5	72	
do	2	m16	WT 5 x 9.5	3	9 5/16	do	2/5	72	
L-4-B	4	p5	PL 1/2 x 12	1	3	5-1/16	2/6	102	5/F PL
F14	ONE		CROSS FRAME						
WT-4	1	m20	C12 x 25	6	4 3/16	5-5/8	2/3	159	
L-4-A	1	m8	WT 5 x 9.5	5	1 1/4	5-7/8	2/4	48	5/F W10X19
	1	m21	WT 5 x 9.5	3	9 3/16		2/5	36	
do	1	m22	WT 5 x 9.5	3	9 11/16	do	2/5	36	
L-4-B	2	p5	PL 1/2 x 12	1	3	5-1/16	2/6	51	5/F PL
								1979 #	

WORK ORDER NO. 15713 | DRAWING NO. 20-4 | REV.

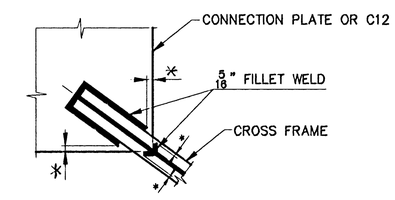

* NO WELD FOR 1/4" MIN., 1/2" MAX.

WELD TERMINATION DETAIL

STEEL: ASTM [A36] [A572 GR.] [X] A709 GR. 50W [Unless Noted]
WELDING ELECTRODE: [E70] [X] See Welding Proc. [None]
HOLES: [13/16] [X] 15/16 [1-1/16] [X] Unless Noted [As Noted] [None]
PAINT: [None] [X] Shop Coat [Galv. After Fab.] [X] Unless Noted
SPECIAL PAINT: SEE SHEET 10-1
SPECIAL CLEANING: [X] Blast Clean SSPC SP10 [None]

ITEM NO. 506.55 | BRIDGE NO. 44 | PROJ. NO. BRS-RS 0113 (8)

TITLE: CROSS FRAMES

APPROVED:

PRINT DIST.		
5	10-17-96	APPR.
ORIG	12-3-96	FAB.
5	11-18-96	APP
ORIG	4-3-97	VAT

National Eastern Corporation
Plainville, Connecticut

JOB: U.S. ROUTE 5 OVER BLACK RIVER
SPRINGFIELD, VERMONT

CUSTOMER: WINTERSETT, INC.

DESIGNER: VERMONT AGENCY OF TRANSPORTATION

			WORK ORDER NO.	DRAWING NO.	REV.
CHECKED	10/96	JH	15713	20-4	
DRAWN	9/96	CSD			