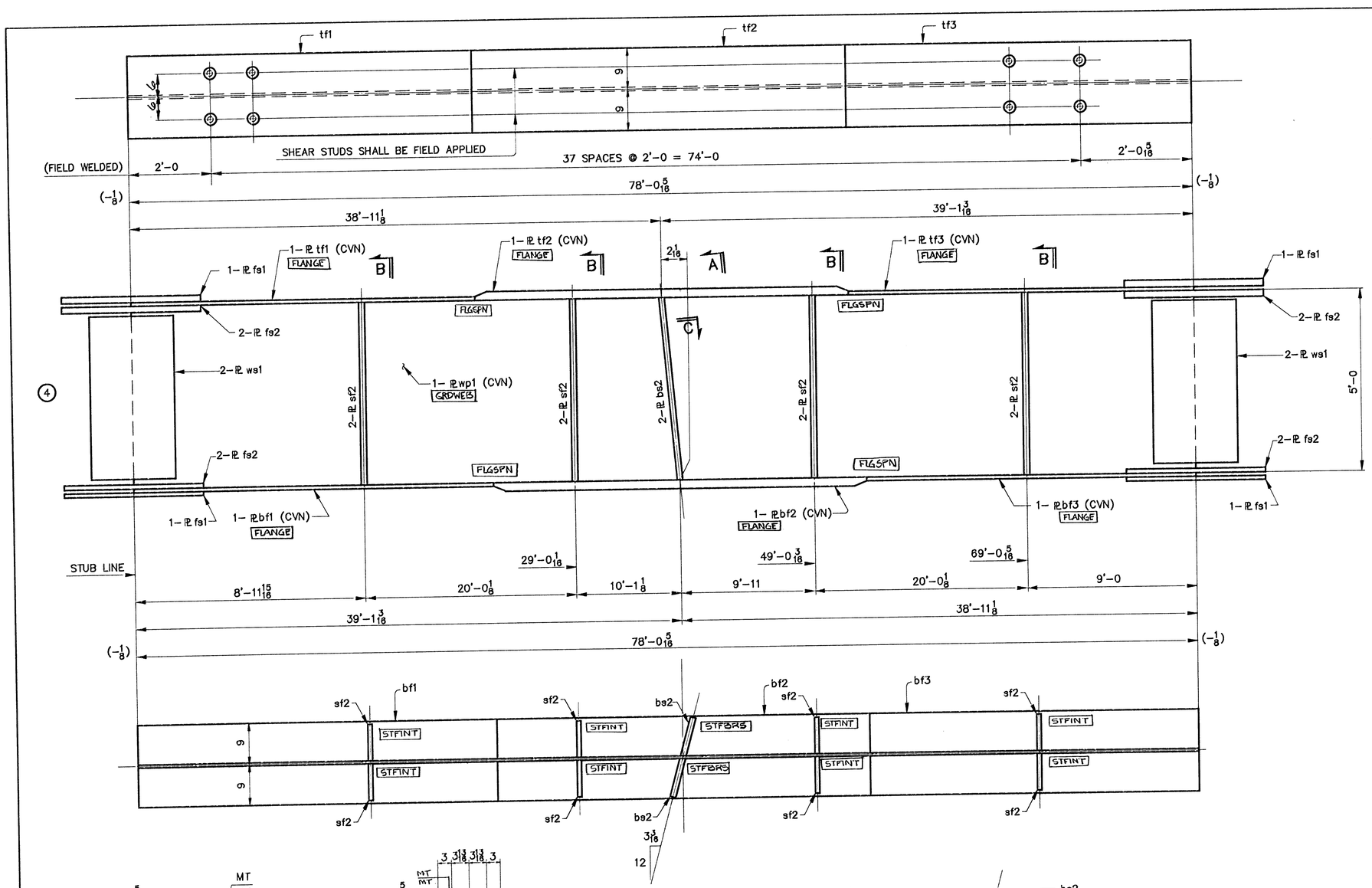

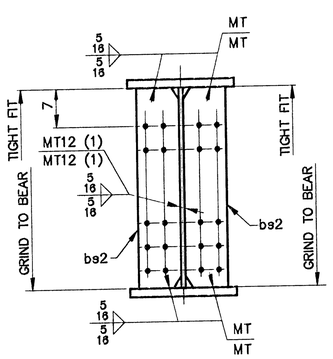

SECTION A

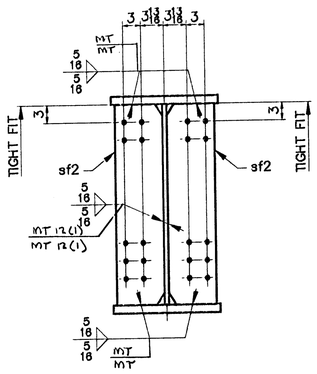

SECTION B

ONE ~ GIRDER ~ G4B

GIRDER

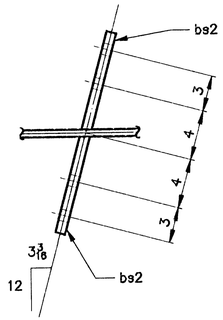

SECTION C

SHIP MARK	NO.	MARK	SHAPE	LENGTH			ITEM NO.	WT.	REMARKS
G4B	ONE		GIRDER						
W1-2	1	wp1	PL 3/8 x 60	78	0 5/16		1/4	9956	(CVN)
L-2-C	1	tf1	PL 1 1/8 x 18	24	11 1/8		1/8	1718	(CVN)
	1	tf2	PL 2 1/8 x 18	28	0		1/7	3644	(CVN)
do	1	tf3	PL 1 1/8 x 18	25	1 3/16		1/8	1729	(CVN)
L-2-E	1	bf1	PL 1 1/8 x 18	25	1 3/16		1/8	1729	(CVN)
	1	bf2	PL 2 1/8 x 18	28	0		1/7	3644	(CVN)
do	1	bf3	PL 1 1/8 x 18	24	11 1/8		1/8	1718	(CVN)
L-2-J	2	bs2	PL 7/8 x 8 1/2	5	0		2/1	253	F2E
L-2-G	8	sf2	PL 1/2 x 8	5	0		2/2	544	F1E
L-2-L	4	fs1	PL 5/8 x 18	1	10		1/10	281	(CVN)
	8	fs2	PL 5/8 x 7	1	10		1/11	218	(CVN)
do	4	ws1	PL 5/8 x 54	1	1		1/12	459	(CVN)
								25893 #	

BILL OF MATERIAL — WORK ORDER NO. 15713 — DRAWING NO. 10-17 — REV.

NOTES

1. FOR CAMBER DIAGRAM SEE DRAWING 10-5.
2. FOR GIRDER STANDARD DETAILS SEE DRAWINGS 10-3.
3. (CVN) DENOTES CHARPY TEST REQUIRED.

STEEL: ASTM [ ] A36 [ ] A572 GR. [X] A709 GR. 50W [ ] Unless Noted
WELDING ELECTRODE: [ ] E70 [X] See Welding Proc. [ ] None
HOLES: [ ] 13/16 [X] 15/16 [ ] 1-1/16 [ ] Unless Noted [ ] As Noted [ ] None
PAINT: [X] None [ ] Shop Coat [ ] Galv. After Fab. [ ] Unless Noted
SPECIAL PAINT: NONE
SPECIAL CLEANING: [X] Blast Clean SSPC SP10 [ ] None

ITEM NO. 506.55 | BR. NO. 44 | PROJ. NO. BRS-RS 0113 (8)

TITLE: GIRDER ~ G4B

APPROVED:		
PRINT DIST.		
S	10-18-96	APPR.
ORIG	12-3-96	FAB.
S	11-13-96	APP
OBIG	4-2-97	VAT

National Eastern Corporation
Plainville, Connecticut

JOB: U.S. ROUTE 5 OVER BLACK RIVER
SPRINGFIELD, VERMONT

CUSTOMER: WINTERSETT, INC.
DESIGNER: VERMONT AGENCY OF TRANSPORTATION

			WORK ORDER NO.	DRAWING NO.	REV.
CHECKED	9/96	CSD	15713	10-17	
DRAWN	9/96	CSD			