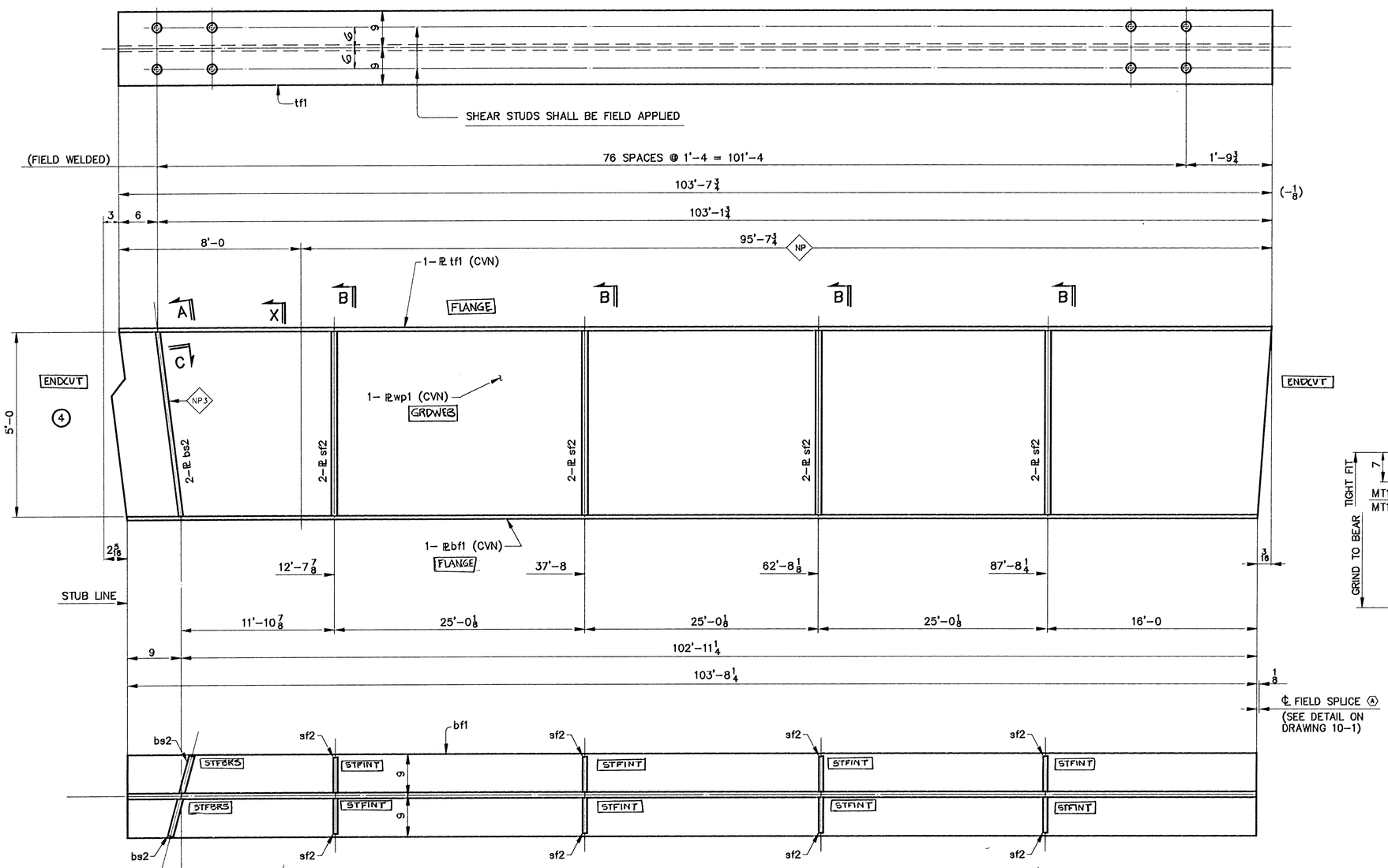

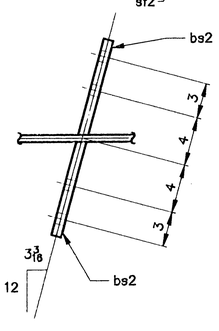

SECTION C

ONE ~ GIRDER ~ G4A

GIRDER

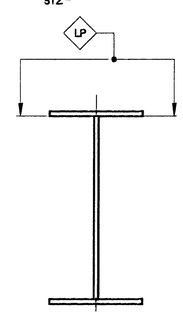

SECTION X

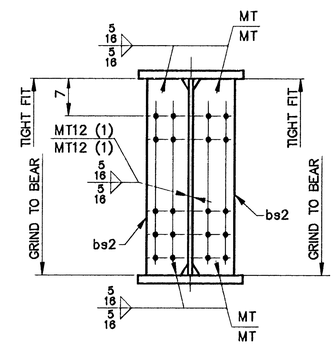

SECTION A

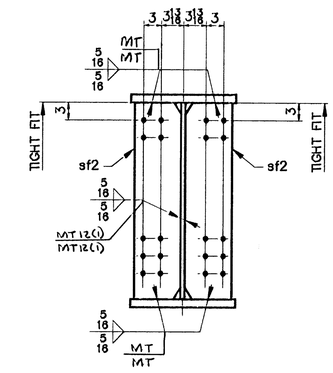

SECTION B

NOTES

1. FOR CAMBER DIAGRAM SEE DRAWING 10-4.
2. FOR GIRDER STANDARD DETAILS SEE DRAWING 10-3.
3. (CVN) DENOTES CHARPY TEST REQUIRED.

SHIP MARK	NO.	MARK	SHAPE	LENGTH			ITEM NO.	WT.	REMARKS
G4A	ONE		GIRDER						
L-2-T	1	wp1	PL 5/8 x 60	103	10		1/3	13228	(CVN)
L-2-H	1	tf1	PL 1 1/8 x 18	103	7¾		1/8	7142	(CVN)
L-2-B	1	bf1	PL 1 1/8 x 18	103	8¼		1/5	7145	(CVN)
L-2-J	2	bs2	PL 7/8 x 8½	5	0		2/1	253	F2E
L-2-G	8	sf2	PL ½ x 8	5	0		2/2	544	F1E
								28312	#

WORK ORDER NO.	DRAWING NO.	REV.
15713	10-10	

STEEL: ASTM [ ] A36 [ ] A572 GR. [X] A709 GR. 50W [ ] Unless Noted
WELDING ELECTRODE: [ ] E70 [X] See Welding Proc. [ ] None
HOLES: [ ] 13/16 [X] 15/16 [ ] 1-1/16 [ ] Unless Noted [ ] As Noted [ ] None
PAINT: [ ] None [X] Shop Coat [ ] Galv. After Fab. [X] Unless Noted
SPECIAL PAINT: SEE SHEET 10-1
SPECIAL CLEANING: [X] Blast Clean SSPC SP10 [ ] None

ITEM NO. 506.55 | BRIDGE NO. 44 | PROJ. NO. BRS-RS 0113 (8)

TITLE: GIRDER ~ G4A

APPROVED:		
PRINT DIST.		
5	10-12-96	APPR.
ORIG	12-3-96	FAB.
5	11-13-96	APP
0 R16	4-3-97	VAT
CHECKED	10/96	CSD
DRAWN	9/96	CSD

National Eastern Corporation
Plainville, Connecticut

JOB: U.S. ROUTE 5 OVER BLACK RIVER
SPRINGFIELD, VERMONT

CUSTOMER: WINTERSETT, INC.

DESIGNER: VERMONT AGENCY OF TRANSPORTATION

WORK ORDER NO.	DRAWING NO.	REV.
15713	10-10	