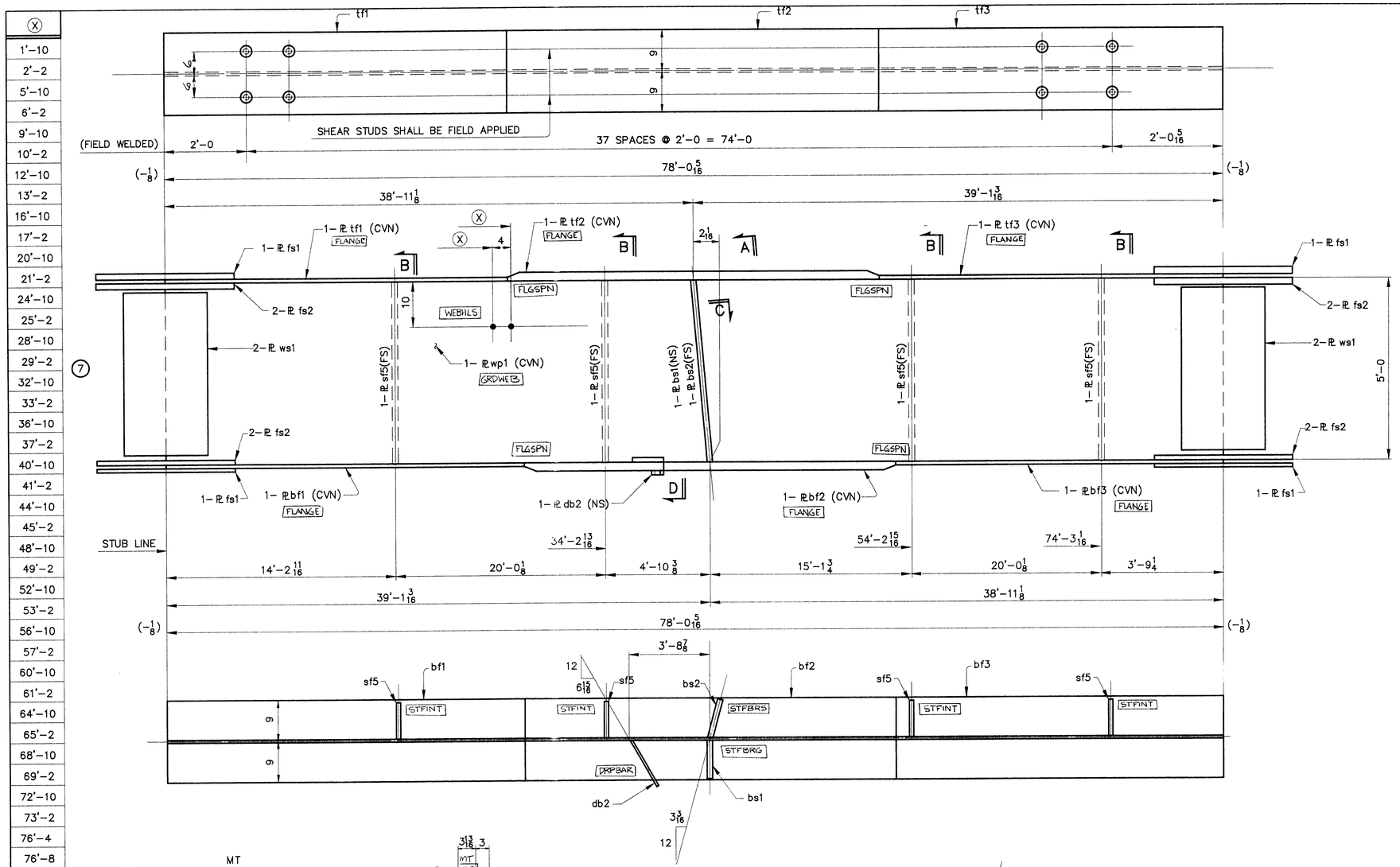

SHIP MARK	NO.	MARK	SHAPE	LENGTH			ITEM NO.	WT.	REMARKS
G7B	ONE		GIRDER						
	1	wp1	PL 5/8 x 60	78	0 5/16		1/4	9956	(CVN)
	1	tf1	PL 1 1/8 x 18	24	11 1/8		1/6	1718	(CVN)
	1	tf2	PL 2 1/8 x 18	28	0		1/7	3644	(CVN)
	1	tf3	PL 1 1/8 x 18	25	1 3/16		1/6	1729	(CVN)
	1	bf1	PL 1 1/8 x 18	25	1 3/16		1/6	1729	(CVN)
	1	bf2	PL 2 1/8 x 18	28	0		1/7	3644	(CVN)
	1	bf3	PL 1 1/8 x 18	24	11 1/8		1/6	1718	(CVN)
	1	bs1	PL 7/8 x 8 1/2	5	0		2/1	127	F2E
	1	bs2	PL 7/8 x 8 1/2	5	0		2/1	127	F2E
	4	sf5	PL 1/2 x 8	5	0		2/2	272	F1E
	1	db2	PL 1/4 x 4 1/8	1	0 1/16		2/12	4	
	4	fs1	PL 5/8 x 18	1	10		1/10	281	(CVN)
	8	fs2	PL 5/8 x 7	1	10		1/11	218	(CVN)
	4	ws1	PL 5/8 x 54	1	1		1/12	459	(CVN)
								25626 #	

WORK ORDER NO. 15713 | DRAWING NO. 10-20 | REV.

NOTES

1. FOR CAMBER DIAGRAM SEE DRAWING 10-5.
2. FOR GIRDER STANDARD DETAILS SEE DRAWINGS 10-3.
3. (CVN) DENOTES CHARPY TEST REQUIRED.

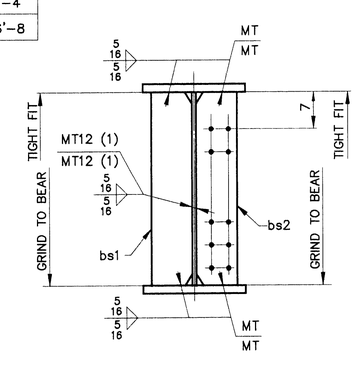

SECTION A

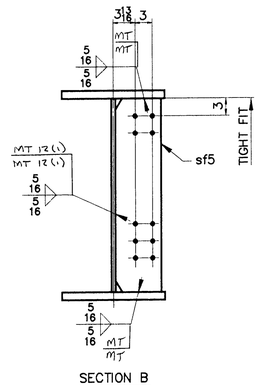

SECTION B

ONE ~ GIRDER ~ G7B

GIRDER

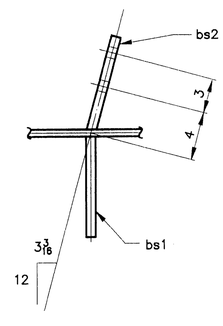

SECTION C

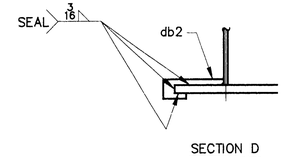

SECTION D

STEEL: ASTM	A36	A572 GR.	☒ A709 GR. 50W	Unless Noted
WELDING ELECTRODE:	E70	☒ See Welding Proc.	None	
HOLES:	13/16	☒ 15/16	1-1/16	Unless Noted	As Noted	None
PAINT:	☒ None	Shop Coat	Galv. After Fab.	Unless Noted
SPECIAL PAINT:	NONE			
SPECIAL CLEANING:	☒ Blast Clean SSPC SP10	None		

ITEM NO. 506.55 | BR. NO. 44 | PROJ. NO. BRS-RS 0113 (8)

TITLE: GIRDER ~ G7B

APPROVED:		
PRINT DIST.		
5	10-14-96	APPR.
ORIG	12-3-96	FAB.
5	11-18-96	APP
ORIG	9-3-97	VAT

National Eastern Corporation
Plainville, Connecticut

JOB: U.S. ROUTE 5 OVER BLACK RIVER
SPRINGFIELD, VERMONT

CUSTOMER: WINTERSETT, INC.

DESIGNER: VERMONT AGENCY OF TRANSPORTATION

			WORK ORDER NO.	DRAWING NO.	REV.
CHECKED	10/96	CSD	15713	10-20	
DRAWN	9/96	CSD			