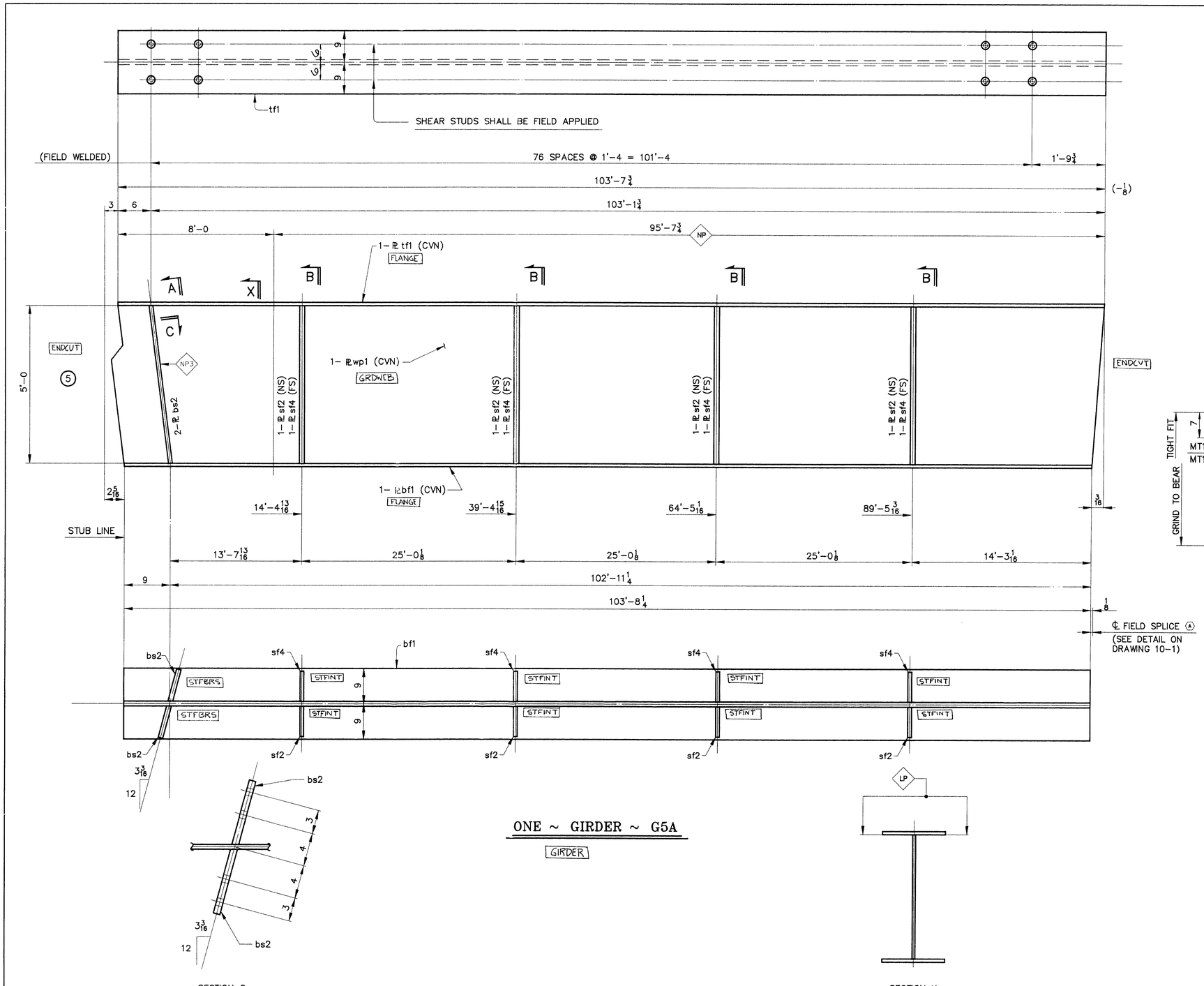

ONE ~ GIRDER ~ G5A

GIRDER

SECTION C

SECTION X

SHIP MARK	NO.	MARK	SHAPE	LENGTH		ITEM NO.	WT.	REMARKS
G5A	ONE		GIRDER					
LOT-2	1	wp1	PL 5/8 x 60	103	10	1/3	13228	(CVN)
L-2-4	1	tf1	PL 1 1/8 x 18	103	7 3/4	1/8	7142	(CVN)
L-2-8	1	bf1	PL 1 1/8 x 18	103	8 1/4	1/5	7145	(CVN)
L-2-3	2	bs2	PL 7/8 x 8 1/2	5	0	2/1	253	F2E
L-2-6	4	sf2	PL 1/2 x 8	5	0	2/2	272	F1E
L-2-6	4	sf4	PL 1/2 x 8	5	0	2/2	272	F1E
							28312	#

BILL OF MATERIAL — WORK ORDER NO. 15713 — DRAWING NO. 10-11 — REV.

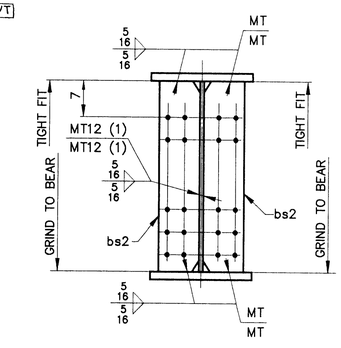

SECTION A

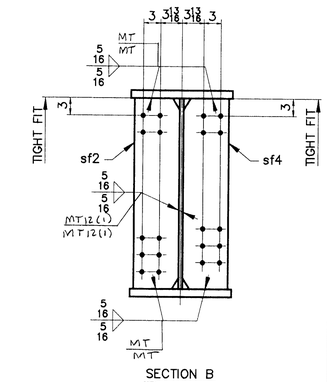

SECTION B

NOTES

1. FOR CAMBER DIAGRAM SEE DRAWING 10-4.
2. FOR GIRDER STANDARD DETAILS SEE DRAWING 10-3.
3. (CVN) DENOTES CHARPY TEST REQUIRED.

STEEL: ASTM [A36] [A572 GR.] [X] A709 GR. 50W [Unless Noted]
WELDING ELECTRODE: [E70] [X] See Welding Proc. [None]
HOLES: [13/16] [X] 15/16 [1-1/16] [Unless Noted] [As Noted] [None]
PAINT: [None] [X] Shop Coat [Galv. After Fab.] [X] Unless Noted
SPECIAL PAINT: SEE SHEET 10-1
SPECIAL CLEANING: [X] Blast Clean SSPC SP10 [None]

ITEM NO. 506.55 | BRIDGE NO. 44 | PROJ. NO. BRS-RS 0113 (8)

TITLE: GIRDER ~ G5A

APPROVED:

	PRINT DIST.	
5	10-17-96	APPR.
ORIG	12-3-96	FAB.
5	11-18-96	APP
ORIG.	4-3-97	

National Eastern Corporation
Plainville, Connecticut

JOB: U.S. ROUTE 5 OVER BLACK RIVER
SPRINGFIELD, VERMONT

CUSTOMER: WINTERSETT, INC.

DESIGNER: VERMONT AGENCY OF TRANSPORTATION

			WORK ORDER NO.	DRAWING NO.	REV.
CHECKED	10/96	CSD	15713	10-11	
DRAWN	9/96	CSD			