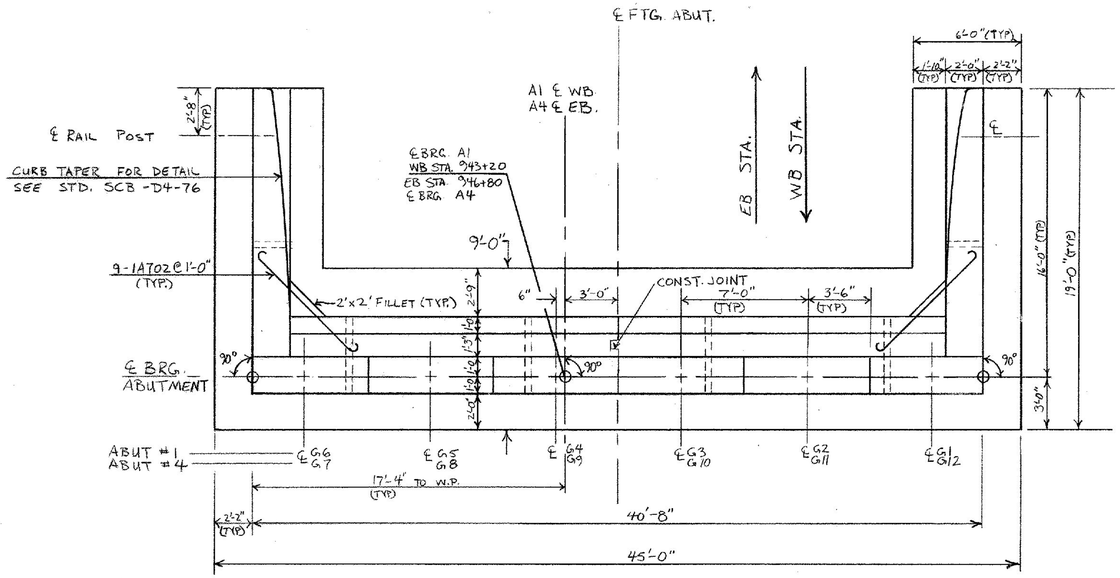

ABUTMENT #1 & #4 PLAN

SCALE 1/4" = 1'-0"

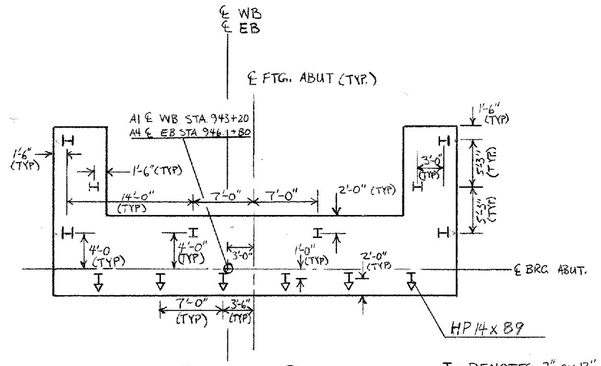

PILING PLAN

SCALE 1/8" = 1'-0"

I - DENOTES 2" ON 12" BATTER

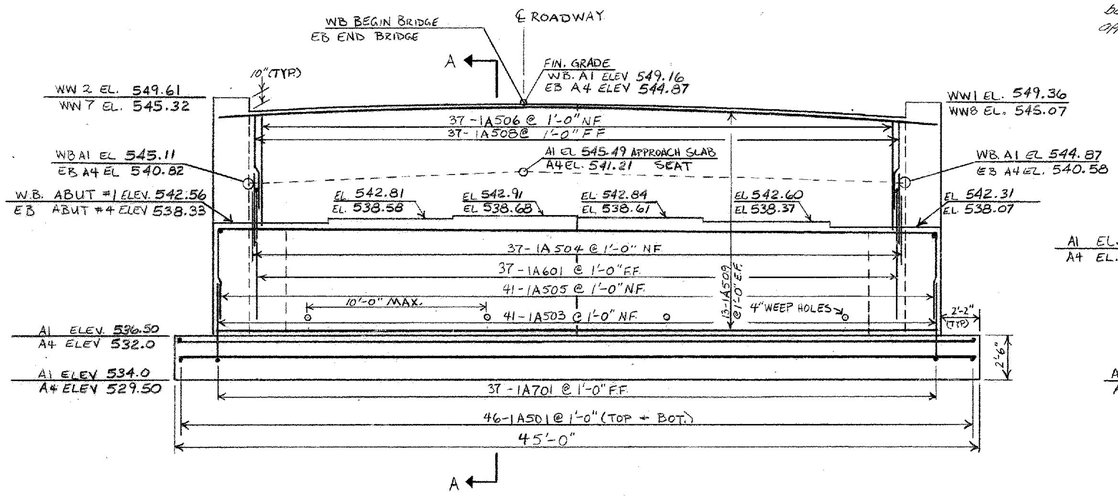

ABUTMENT #1 & #4 ELEVATION

SCALE 1/4" = 1'-0"

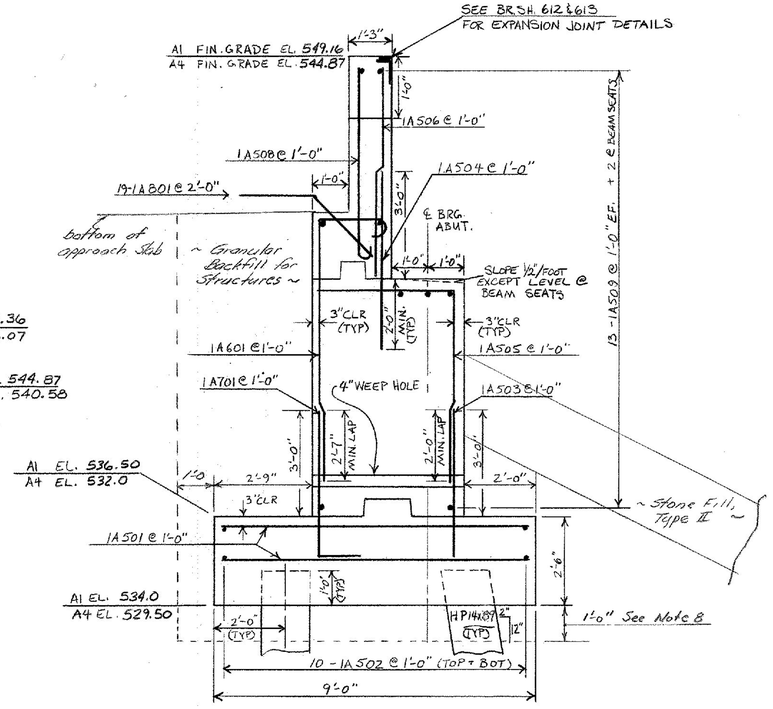

SECTION A-A

SCALE 1/2" = 1'-0"

NOTES:

1. ABUTMENT # 1 DETAILS SHOWN. ABUTMENT # 4 SIMILAR. PREFIX REINFORCING MARK WITH 4A.
2. FOR WINGWALL DETAILS, SEE BRIDGE SHEET BR 617 .
3. ALL HP 14X@89 PILING SHALL BE DRIVEN TO REFUSAL ON LEDGE, AND BATTERED AS INDICATED. DESIGN PILE LOAD 193 KIPS.
4. FOR CONSTRUCTION JOINT DETAILS SEE STD. DWG. SCB-D6-73.
5. ALL CONCRETE IN ABUTMENTS SHALL BE "CONCRETE, CLASS B". "CONCRETE, CLASS A" MAY BE SUBSTITUTED IN THE CURB SECTION AT CONTRACTORS EXPENSE.
6. ALL REINFORCING STEEL IN ABUTMENTS SHALL HAVE A 3 INCH CLEAR COVER.
7. SEE STD. DWG. SCB-D1-75, NOTED 7, 9, 10, AND 12.
8. ABUTMENTS NO. 2 AND 4 FOOTINGS SHALL BE CONSTRUCTED ON A 1'-0" LAYER OF "GRANULAR BACKFILL FOR STRUCTURES", WHICH SHALL BE COMPACTED TO 95% DENSITY, PER SPECIFICATION 203.10d.

STATE OF VERMONT
AGENCY OF TRANSPORTATION

TOWN OF RUTLAND	Bridge No. 6
	Log Sta.
HIGHWAY NO. U.S. 4	Surv. Sta. 945+00
ABUTMENT #1 & #4 DETAILS	
U.S. 4 BR 6 OVER OTTER CREEK	
Designed by A. ELWOOD	Drawn by S. JUNG
Checked by A. Elwood date 8-83	Bridge Design Supervisor R. S. HAUPT date
PROJECT WEST RUTLAND-RUTLAND	PROJECT NO. F020-1(10)
Bridge Sheet No. BR 615	Sheet 133 of 459

BR-6-'83

BRUNING 44-131 83384