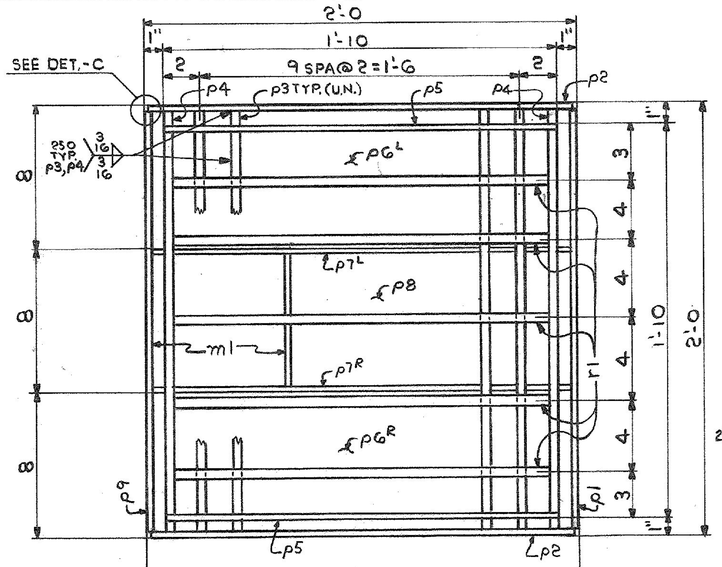

VIEW A-A

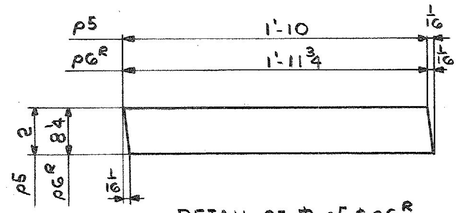

DETAIL OF PL-p5 & p6R

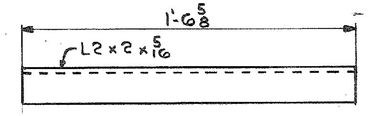

8-SCUPPER SUPPORTS-MK. DR2
GALVANIZE AS PER ASTM A123 AFTER FABRICATION

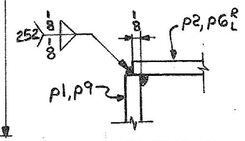

DETAIL-C
TYP @ CORNER JT.

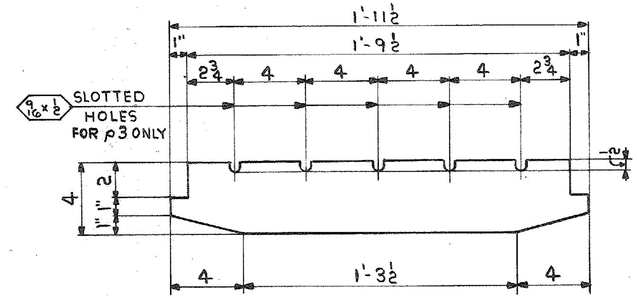

DETAIL OF BARS p3 & p4

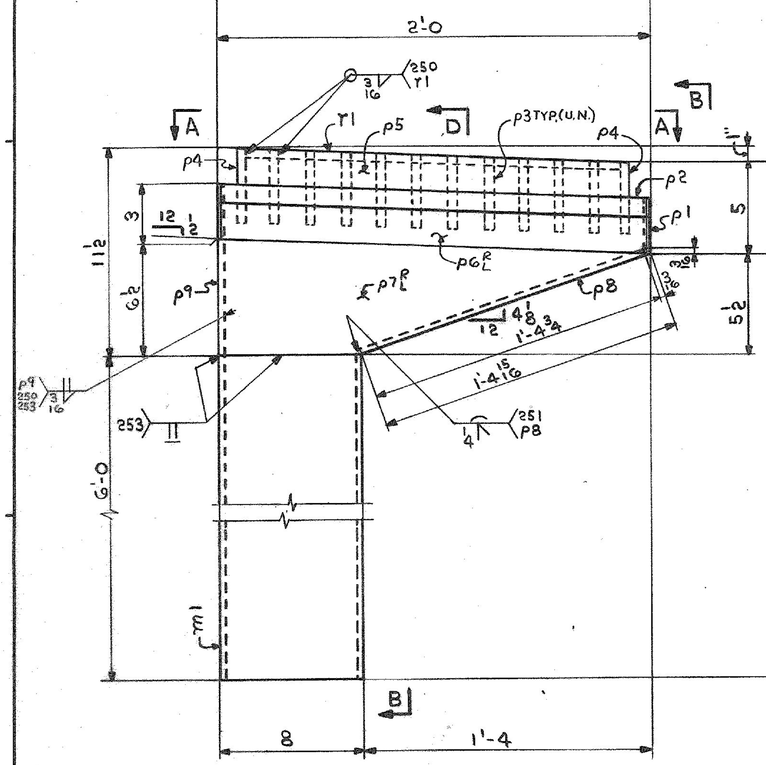

8-SCUPPERS-MK. DR1
GALVANIZE AS PER ASTM A123 AFTER FABRICATION

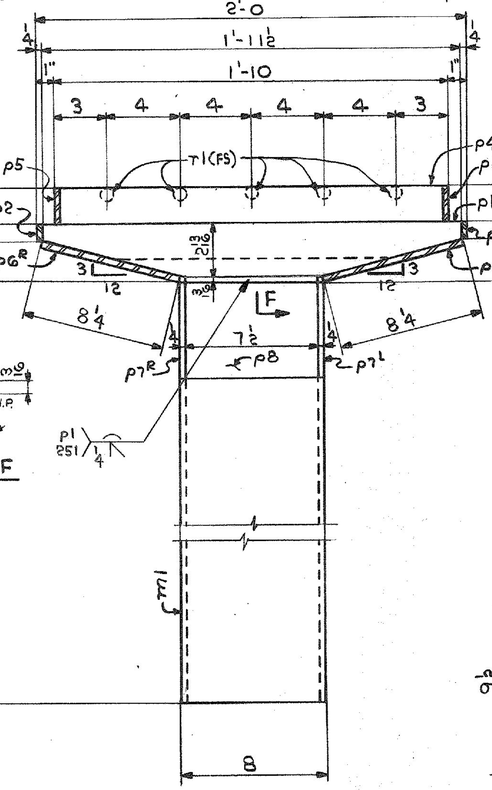

VIEW B-B

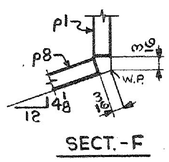

SECT.-F

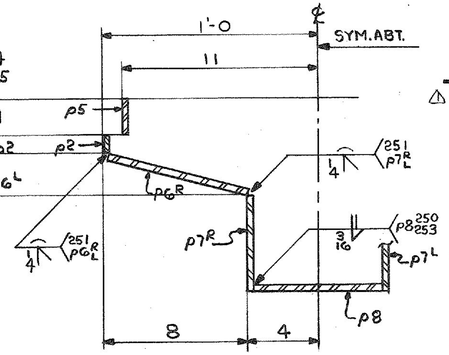

SECT.-D

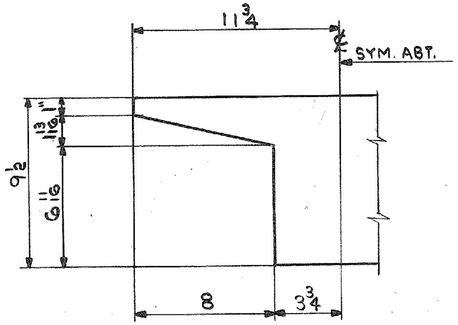

DETAIL OF PL-p9

△ ADD SHOP NOTE

SHIP MARK	NO.	MARK	SHAPE	LENGTH		WT.	ITEM NO.	WT	REMARKS
DR1	8		SCUPPERS						
	8	m1	TS 8 x 8 x ¼	6	0	NP 31020 SC 40'-0 H.W. 2.04	2/M	1239	ASTM A500 or A501
	8	p1	PL ¼ x 2 19/16	1	11½	STK. RES.	2/J	37	
	16	p2	PL ¼ x 1"	1	11¾		2/J	27	
	80	p3	BAR 4 x ½	1	11½	20'-0 20'-0 PO. 31755	2/K	1066	
	16	p4	BAR 4 x ½	1	11½		2/K	213	
	16	p5	PL ¼ x 2	1	10 1/16		2/J	50	
	8	p6R	PL ¼ x 8¼	1	11 13/16	STK. RES.	2/J	111	
	8	p6L	PL ¼ x 8¼	1	11 13/16		2/J	111	
	8	p7R	PL ¼ x 6½	2	0		2/J	88	
	8	p7L	PL ¼ x 6½	2	0		2/J	88	
	8	p8	PL ¼ x 7½	1	4¾		2/J	71	
	8	p9	PL ¼ x 9½	1	11½		2/J	127	
	40	r1	ROD ½"Ø	1	9	SC 20'-0 PO. 31755 H.S. 2.04 H.W. 2.2	2/L	47	
DR2	8		L2 x 2 x 5/16	1	6⅝	2@20'-0 PO. 31755 H.S. 2.04 H.W. 2.2	2/N	49	
								3324	

△ SHOP NOTE
PLs P1, P8 and P2, P6, P7 may be fabricated out of bent PL -½"R

IT. NO. 506.91 | BR. NO. 6 | PROJ. NO. F020-1(10)

FOR APPROVAL | **FOR FILES & FIELD**

STEEL: ASTM. [X] A36 [ ] A572 GR. [ ] A588 GR. [X] Unless Noted
WELDING ELECTRODE: [ ] E70 [X] See Welding Proc. [ ] None
SHOP CONN: [ ] Bolted [X] Welded [ ] None
FIELD CONN: [ ] Bolted [X] Welded [ ] None
HOLES: [ ] 13/16 [ ] 15/16 [ ] [X] As Noted [ ] None
PAINT: [ ] None [ ] Shopcoat [X] Galv. After Fab. [ ] As Noted
SPECIAL PAINT: NONE
SPECIAL CLEANING: [ ] Blast Clean [X] None

SCUPPER DETAILS

APPROVED: 2-1-85		
PRINT DIST.		
7	12-14-84	APP.
8	2-12-85	FAB.
		F&F.
7	3-26-85	APP
8	3-26-85	FAB
0216	11-14-85	VAT
REV. △	3-25-85	JCM
CHECKED	RW	12-13-84
DRAWN	DW	12-3-84

Bancroft & Martin Inc.
South Portland, Maine 04106

JOB: U.S. ROUTE 4 W.B. OVER OTTER CREEK RUTLAND, VERMONT

CUSTOMER: EARTH CONSTRUCTION

DESIGNER: STATE OF VERMONT, AGENCY OF TRANS.

ORDER NO.	JOB NO.	DRAWING NO.	REV.
	4-43	59-1	△

956-18

HARLAN F. SPILLER CO. INC.