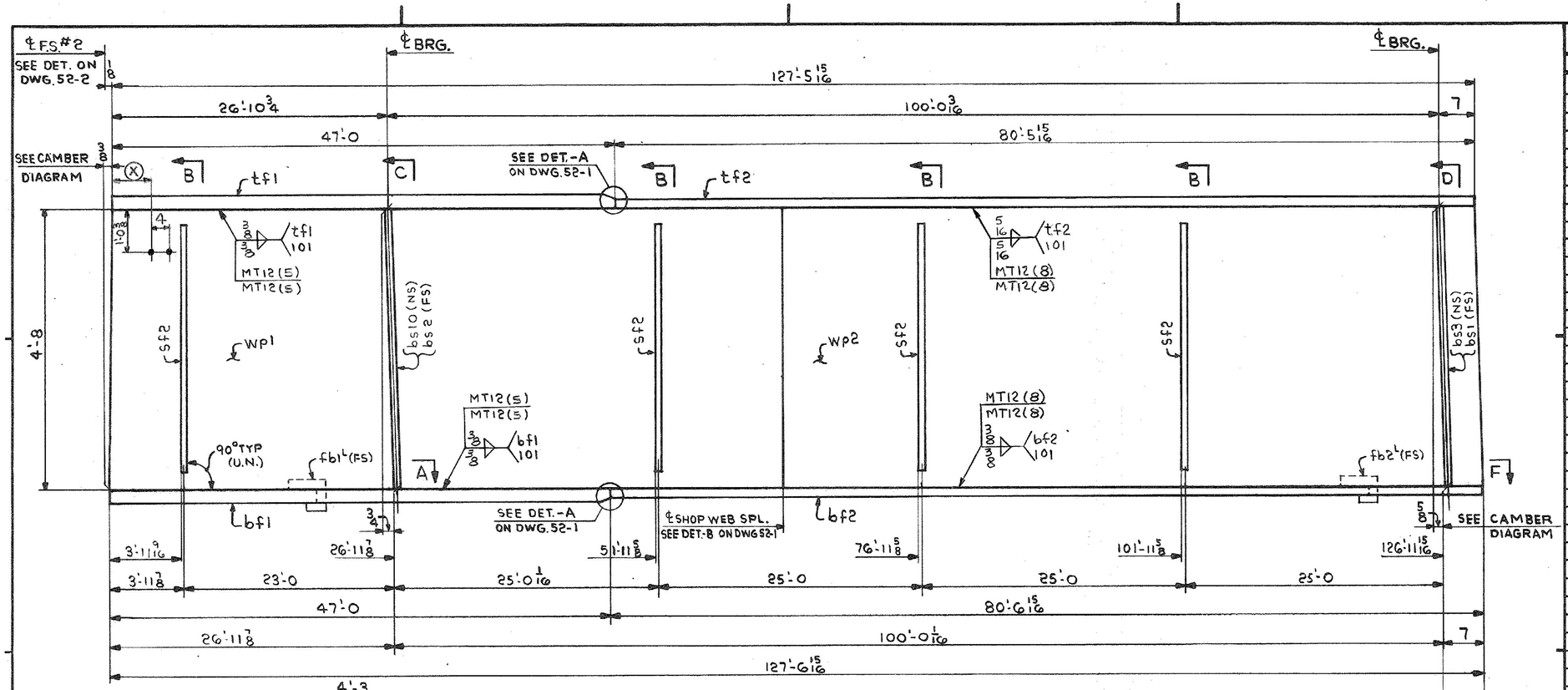

ONE-GIRDER-GIC

FOR GIRDER STANDARD DETAILS SEE DWG. 52-2.
FOR WEB & FLG. & CUTTING & ASSEMBLY SEE DWG. 52-1.

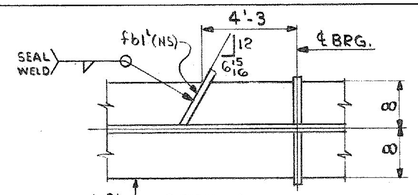

SECT.-A

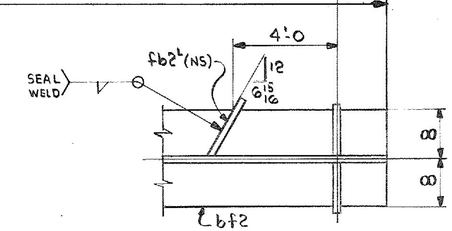

SECT.-F

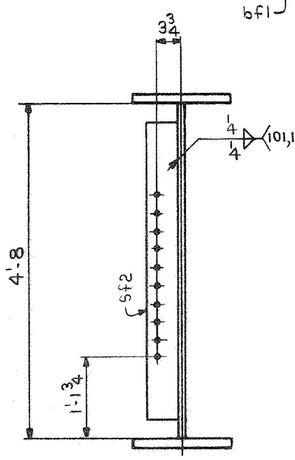

SECT.-B

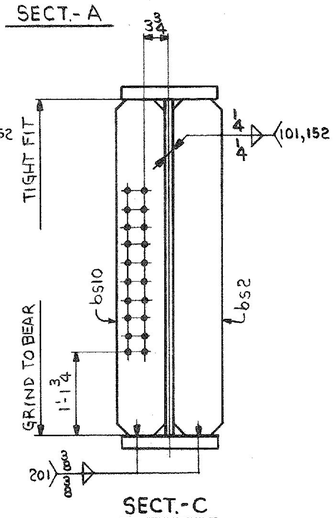

SECT.-C

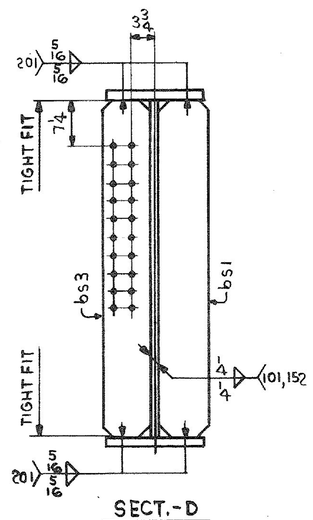

SECT.-D

DIMENSION (X)	
1'-6	65'-6
5'-6	69'-6
9'-6	73'-6
13'-6	77'-6
17'-6	81'-6
21'-6	85'-6
25'-6	89'-6
29'-6	93'-6
33'-6	97'-6
37'-6	101'-6
41'-6	105'-6
45'-6	109'-6
49'-6	113'-6
53'-6	117'-6
57'-6	121'-6
61'-6	125'-6

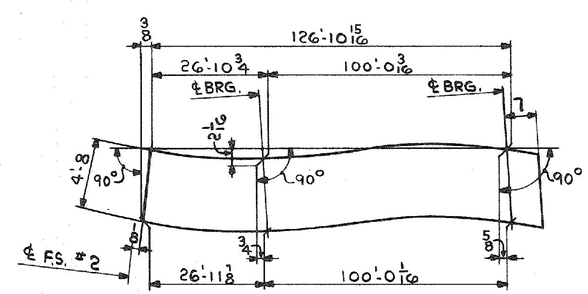

CAMBER DIAGRAM

SHIP MARK	NO.	MARK	SHAPE	LENGTH		WT.	ITEM NO.	WT	REMARKS
GIC	ONE		GIRDER						
	1	WP1	PL 5/8 x 57 11/16	63	9 1/2	58 1/2 x 61'-0	1/C		CVN
	1	WP2	PL 5/8 x 56 1/16	63	9 7/16	58 1/2 x 61'-0	1/B	5187	CVN
	1	tf1	PL 1 3/4 x 16	47	0	1 @ 49'-2	1/H	4478	CVN Po 31731
	1	tf2	PL 7/8 x 16	80	5 15/16	1 @ 80'-10	1/F	3835	
	1	bf1	PL 1 3/4 x 16	47	0	1 @ 49'-2	1/I	4478	
	1	bf2	PL 7/8 x 16	80	6 15/16	1 @ 80'-9	1/G	3839	CVN
	1	bs1	PL 3/4 x 8	4	8	6 @	2/B	95	
	1	bs2	PL 3/4 x 8	4	8	35 x	2/B	95	
	1	bs3	PL 3/4 x 8	4	8	10'0	2/B	95	
	1	bs10	PL 3/4 x 8	4	8	Po 31731	2/B	95	
	4	sf2	PL 5/8 x 5	4	2	2 @ 21'0 Po-31739	2/C	117	
	1	fb1L	PL 1/4 x 3 3/4	0	10 7/8	Caps	2/G	3	
	1	fb2L	PL 1/4 x 2 7/8	0	10 7/8		2/G	2	
								32381#	

IT. NO. 506.91 | BR. NO. 6 | PROJ. NO. F020-1(10)

FOR APPROVAL | **FOR FILES & FIELD**

STEEL: ASTM. [ ] A36 [ ] A572 GR. [X] A588 GR. [ ] Unless Noted
WELDING ELECTRODE: [ ] E70 [X] See Welding Proc. [ ] None
SHOP CONN: [ ] Bolted [X] Welded [ ] None
FIELD CONN: [X] Bolted [ ] Welded [ ] None
HOLES: [ ] 13/16 [X] 15/16 [ ] Unless Noted [ ] None
PAINT: [X] None [ ] Shopcoat [ ] Galv. After Fab. [ ] As Noted
SPECIAL PAINT: NONE
SPECIAL CLEANING: [X] Blast Clean [ ] None SSPC-SP6

GIRDER-GIC

APPROVED: 2-1-85

PRINT DIST.		
7	12-14-84	APP.
8	2-12-85	FAB.
		F&F.
ORIG	11-14-85	VAT

Bancroft & Martin Inc.
South Portland, Maine 04106

JOB: U.S. ROUTE 4 W.B. OVER OTTER CREEK RUTLAND, VERMONT

CUSTOMER: EARTH CONSTRUCTION
DESIGNER: STATE OF VERMONT, AGENCY OF TRANS.

REV. △			ORDER NO.	JOB NO.	DRAWING NO.	REV.
CHECKED	RW	12-19-84		4-43	52-15	△
DRAWN	DW	11-29-84				

HARLAN P. SPILLER CO. INC.

956-08