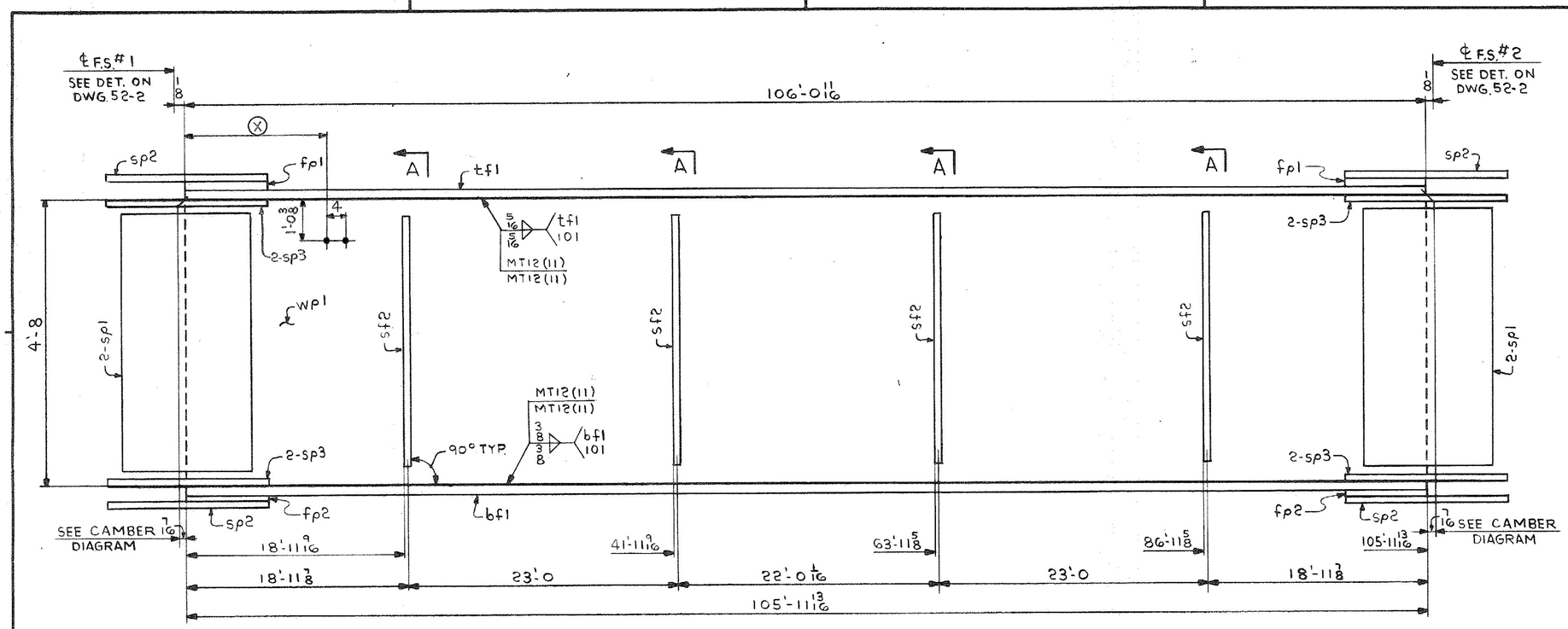

ONE-GIRDER-GIB

FOR GIRDER STANDARD DETAILS SEE DWG. 52-2.
FOR WEB & FLG. PL CUTTING & ASSEMBLY SEE DWG. 52-1.

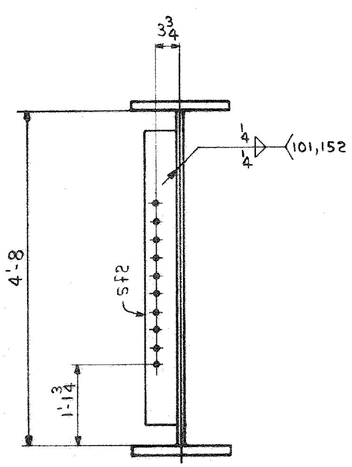

SECT.-A

DIMENSION (X)	
1'-6	57'-0
5'-0	61'-0
9'-0	65'-0
13'-0	69'-0
17'-0	73'-0
21'-0	77'-0
25'-0	81'-0
29'-0	85'-0
33'-0	89'-0
37'-0	93'-0
41'-0	97'-0
45'-0	101'-0
49'-0	104'-6
53'-0	

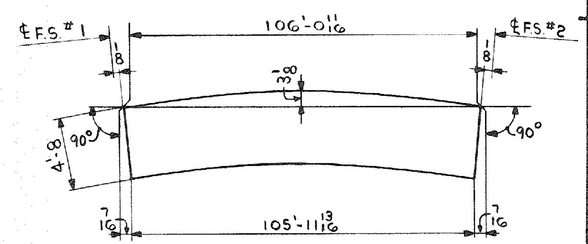

CAMBER DIAGRAM

SHIP MARK	NO.	MARK	SHAPE	LENGTH		WT.	ITEM NO.		REMARKS
GIB	ONE		GIRDER						
	1	wp1	PL 5/8 x 59 1/8	106	0 11/16	60 x 106.3	1/D	1627	CVN
	1	tf1	PL 7/8 x 16	106	0 11/16	16 106.4	1/J	5052	PS 31731
	1	bf1	PL 1 1/4 x 16	105	11 13/16	16 106.3	1/K	7213	CVN
	4	sp1	PL 1/2 x 51 1/2	2	1 1/2	38 51 1/2 x 11.6	1/O	745	CVN *
	4	sp2	PL 3/4 x 16	2	7 1/2	6 9 16.8	1/P	429	CVN PS 31731 *
	8	sp3	PL 3/4 x 6 1/2	2	7 1/2	38 32 x 16.2	1/Q	348	CVN *
									OTHER CUTS
	2	fp1	PL 7/8 x 16	1	3 5/8	38 16.8 PS 31731	1/R	124	4-44 IR *
	2	fp2	PL 1/2 x 16	1	3 3/8	REQ. 16 7A x 50.2	1/S	71	4-44 IS *
	4	sf2	PL 5/8 x 5	4	2	44 @ 21.0 PS 31731	2/C	177	
								26786	# SHIPPING WEIGHT
* PAY WEIGHT									
	4		PL 1/2 x 51	2	1			723	
	4		PL 3/4 x 16	2	7			422	
	8		PL 3/4 x 6 1/2	2	7			343	
	2		PL 7/8 x 16	1	3 3/8			122	
	2		PL 1/2 x 16	1	3 3/8			70	
								26749	# PAY WEIGHT

IT. NO. 506.91 | BR. NO. 6 | PROJ. NO. F020-1(10)

FOR APPROVAL | **FOR FILES & FIELD**

STEEL: ASTM. [ ] A36 [ ] A572 GR. I [X] A588 GR. I [ ] Unless Noted
WELDING ELECTRODE: [ ] E70 [X] See Welding Proc. [ ] None
SHOP CONN: [ ] Bolted [X] Welded [ ] None
FIELD CONN: [X] Bolted [ ] Welded [ ] None
HOLES: [ ] 13/16 [X] 15/16 [ ] [ ] Unless Noted [ ] None
PAINT: [X] None [ ] Shopcoat [ ] Galv. After Fab. [ ] As Noted
SPECIAL PAINT: NONE
SPECIAL CLEANING: [X] Blast Clean [ ] None SSPC-SP6

GIRDER-GIB

APPROVED: 2-1-85

PRINT DIST.		
7	12-14-84	APP.
8	2-12-85	FAB.
		F&F.
ORIG	11-14-85	VAT

Bancroft & Martin Inc.
South Portland, Maine 04106

JOB: U.S. ROUTE 4 W.B. OVER OTTER CREEK RUTLAND, VERMONT

CUSTOMER: EARTH CONSTRUCTION
DESIGNER: STATE OF VERMONT, AGENCY OF TRANS.

REV. △			ORDER NO.	JOB NO.	DRAWING NO.	REV.
CHECKED	RW	12-18-84		4-43	52-9	△
DRAWN	DW	11-29-84				

HARLAN F. SPILLER CO. INC.

956-08