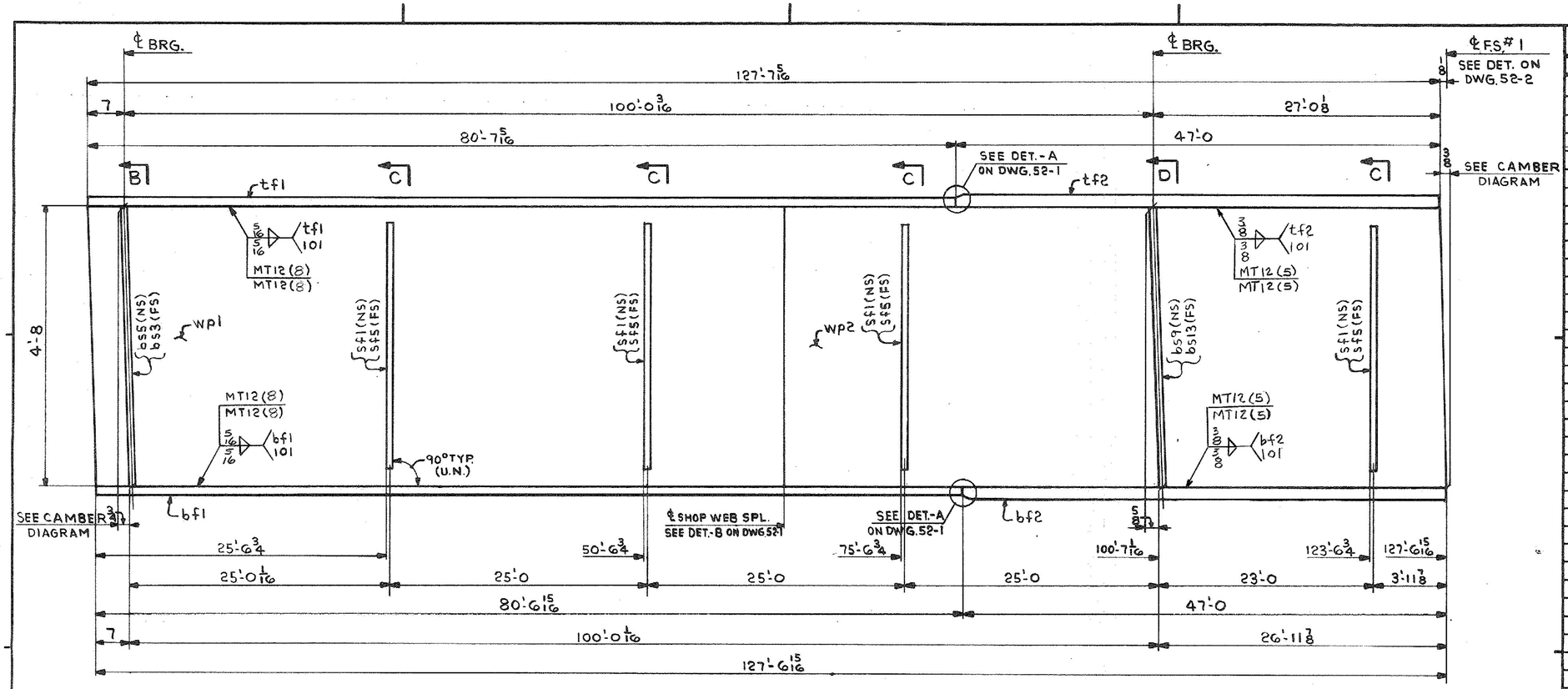

ONE-GIRDER-G5A

FOR GIRDER STANDARD DETAILS SEE DWG. 52-2.
FOR WEB & FLG. PL CUTTING & ASSEMBLY SEE DWG. 52-1.

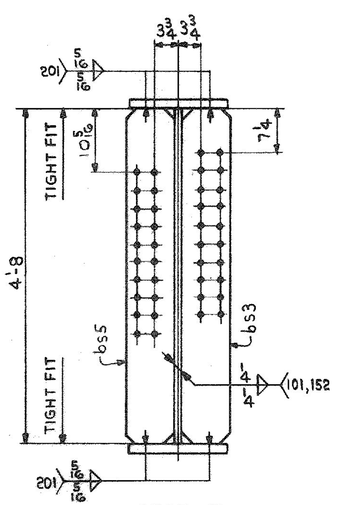

SECT.-B

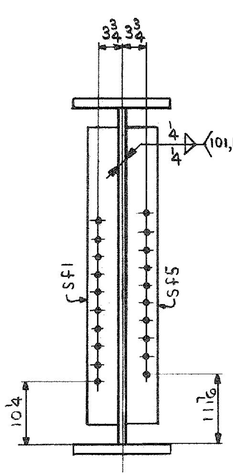

SECT.-C

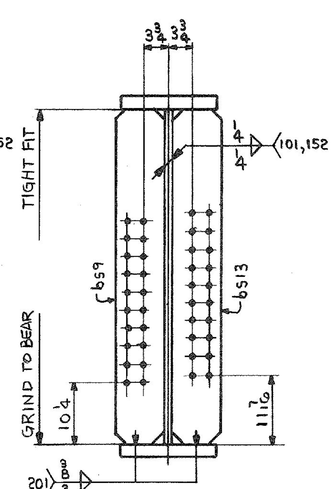

SECT-D

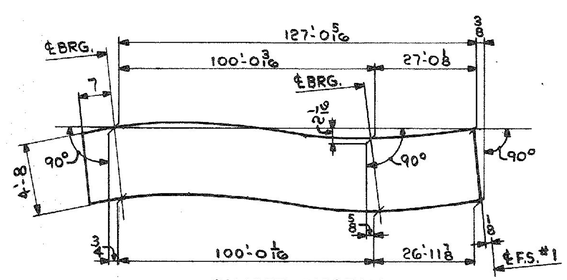

CAMBER DIAGRAM

SHIP	BILL OF MATERIAL					JOB NO. 4-43		DRAWING NO. 52-7	REV. △
MARK	NO.	MARK	SHAPE	LENGTH		WT.	ITEM NO.		REMARKS
G5A	ONE		GIRDER						
	1	wp1	PL 5/8 x 56 11/16	63	10	58½ x 54½	1/B		CVN
	1	wp2	PL 5/8 x 57 11/16	63	9 11/16	58½ x 54½	1/C	1596	CVN
	1	tf1	PL 7/8 x 16	80	7 5/16	16 90.10	1/F	2840	P.O. 31731
	1	tf2	PL 1 3/4 x 16	47	0	16 47.2	1/H	4478	CVN
	1	bf1	PL 7/8 x 16	80	6 15/16	16 90.9	1/G	2839	CVN
	1	bf2	PL 1 3/4 x 16	47	0	16 47.2	1/I	4478	
	1	bs3	PL 3/4 x 8	4	8	6.8	2/B	95	
	1	bs5	PL 3/4 x 8	4	8	35X	2/B	95	
	1	bs9	PL 3/4 x 8	4	8	10.0	2/B	95	
	1	bs13	PL 3/4 x 8	4	8	P.O. 31731	2/B	95	
	4	sf1	PL 5/8 x 5	4	2	24.8 x 4.0	2/C	177	
	4	sf5	PL 5/8 x 5	4	2	P.O. 31739	2/C	177	
								32565#	

IT. NO. 506.91 | BR. NO. 6 | PROJ. NO. F020-1(10)

FOR APPROVAL | **FOR FILES & FIELD**

STEEL: ASTM. [ ] A36 [ ] A572 GR [X] A588 GR [ ] Unless Noted
WELDING ELECTRODE: [ ] E70 [X] See Welding Proc. [ ] None
SHOP CONN: [ ] Bolted [X] Welded [ ] None
FIELD CONN: [X] Bolted [ ] Welded [ ] None
HOLES: [ ] 13/16 [X] 15/16 [ ] Unless Noted [ ] None
PAINT: [X] None [ ] Shopcoat [ ] Galv. After Fab. [ ] As Noted
SPECIAL PAINT: NONE
SPECIAL CLEANING: [X] Blast Clean [ ] None SSPC-SP6

GIRDER - G5A

APPROVED: 2-1-85

PRINT DIST.		
7	12-19-84	APP.
8	2-12-85	FAB.
		F&F.
0216	11-19-85	VAT

Bancroft & Martin Inc.
South Portland, Maine 04106

JOB: U.S. ROUTE 4 W.B. OVER OTTER CREEK RUTLAND, VERMONT

CUSTOMER: EARTH CONSTRUCTION

DESIGNER: STATE OF VERMONT, AGENCY OF TRANS.

REV. △			ORDER NO.	JOB NO.	DRAWING NO.	REV.
CHECKED	RW	12-18-84		4-43	52-7	△
DRAWN	DW	11-28-84				

956-08

HARLAN F. SPILLER CO. INC.