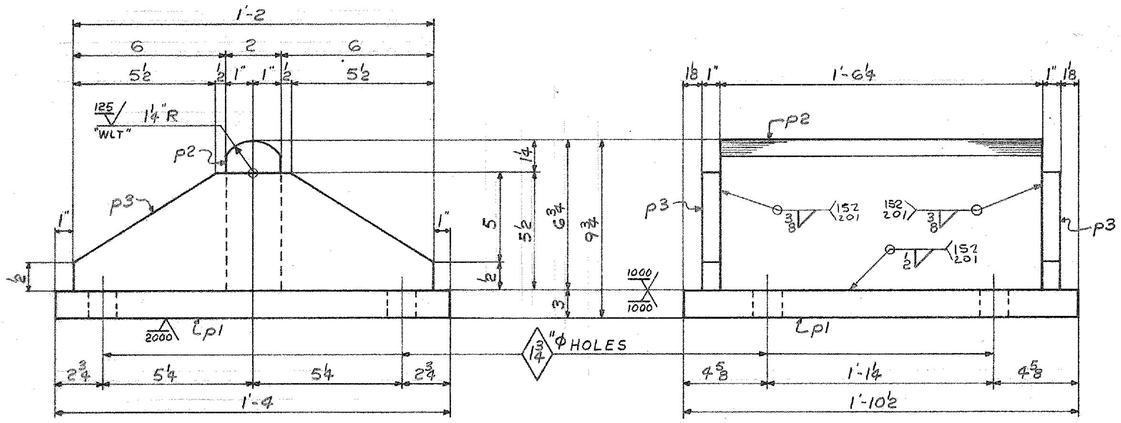

4 ~ FIXED BEARINGS ~ MK. FB1

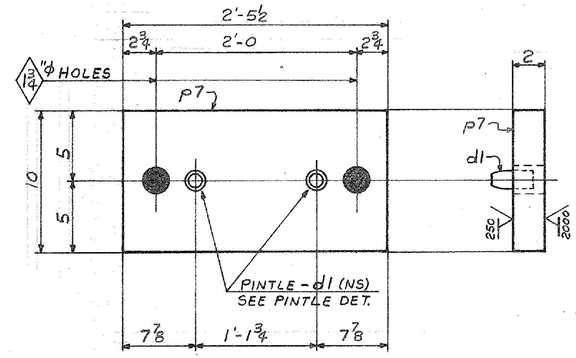

8 ~ MASONRY PLATES ~ MK. MP1

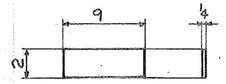

32 ~ SHIMS ~ MK. SH1

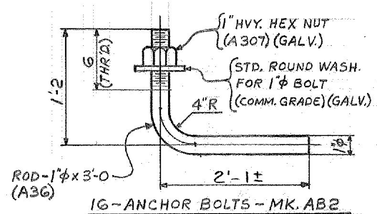

16 ~ ANCHOR BOLTS ~ MK. AB2
(GALV. PER ASTM-A153 AFTER FAB)

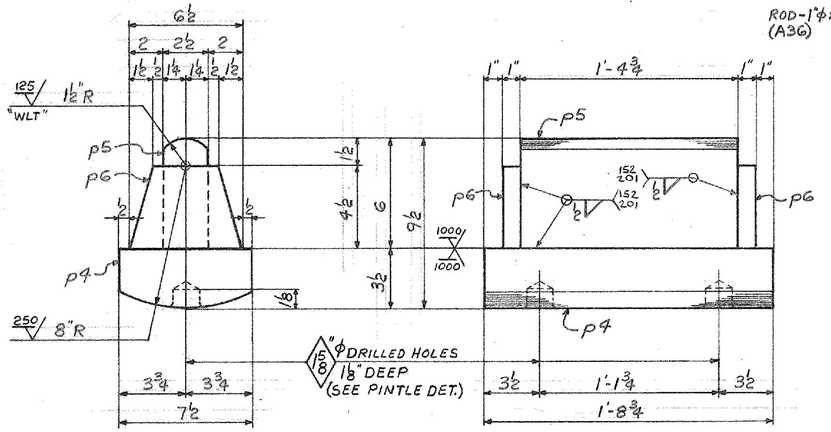

8 ~ EXPANSION BEARINGS ~ MK. EB1

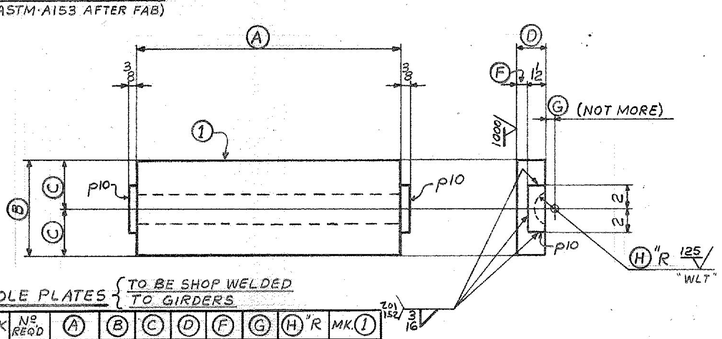

SOLE PLATES { TO BE SHOP WELDED TO GIRDERS

	MARK	Nº REQ'D	A	B	C	D	F	G	H"R	MK. I
FIX	SP1	4	1'-6½	9	4½	3	1½	9/16	1 5/16	p8
EXP.	SP2	8	1'-5	7½	3¾	2⅜	⅞	11/16	1 3/16	p9

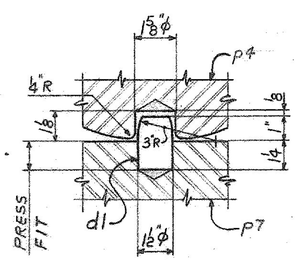

PINTLE DETAIL

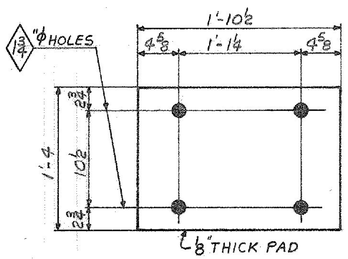

4 ~ FABRIC PADS ~ MK. FP1

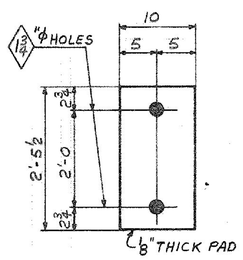

8 ~ FABRIC PADS ~ MK. FP2

(PREFORMED FABRIC PADS AS PER SECT. 731.01 OF VT. STD. SPEC.)

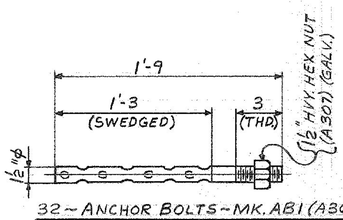

32 ~ ANCHOR BOLTS ~ MK. AB1 (A36)
(GALV. AS PER ASTM-A153 AFTER FAB)

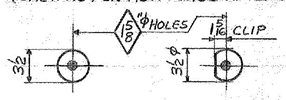

16 ~ WASHERS ~ MK. W1
STD. WASH. FOR ½"φ BOLT - (GALV.)

16 ~ WASHERS ~ MK. W2
STD. CLIPPED WASH. FOR ½"φ BOLT - (GALV.)

NOTES:

1. GALVANIZING TO BE AS PER SPECIAL PROVISION 721.06 AND ASTM A-123 (UN)
2. PRIOR TO GALVANIZING, ALL CORNERS AND EDGES OF STEEL PLATES SHALL BE GROUND TO A 1/16" RAD.
3. 1000/ DENOTES MAXIMUM SURFACE ROUGHNESS ALLOWABLE (IN MICRO INCHES) AS DEFINED IN ANSI B46.1, SURFACE ROUGHNESS, WAVINESS AND LAY, PART I.
4. "WLT" DENOTES ONE SHOP COAT OF WHITE LEAD AND TALLOW.

ALL CONNECTIONS DETAILED ON THIS DRAWING REPRESENT BANCROFT & MARTIN INC. STANDARDS. IN APPROVING THIS DRAWING, FOR FABRICATION, THE ARCHITECT AND/OR ENGINEER ASSUMES THE RESPONSIBILITY FOR THE STRUCTURAL INTEGRITY OF ALL CONNECTIONS SHOWN.

SHOP WELD TO GIRDS.

SHIP MARK	NO.	MARK	SHAPE	LENGTH		MFR.	ITEM NO.	WT.	REMARKS
FB1	4		FIXED BEARINGS						
	4	p1	PL 3 × 16	1	10½	1 @ 42" x 11.5	1/K	1225	GALV
	4	p2	PL 2 × 6¾	1	6¾	O/F 1E BELOW	1/L	279	F2E
	8	p3	PL 1" × 5½	1	2	O/F 1C BELOW	1/M	175	F1E
EB1	8		EXP. BEARINGS						
	8	p4	PL 3½ × 7½	1	8¾	1 @ 27" x 16"	1/A	1236	F1S GALV
	8	p5	PL 2½ × 6	1	9¾	REF. 1E 12 x 1'-6	1/B	510	F2E
	16	p6	PL 1" × 9½	0	6½	1 @ 3" x 6'-8"	1/C	133	F1E
MP1	8		MASONRY PLATES						
	8	p7	PL 2 × 10	2	5½	1 @ 30" x 44"	1/E	1338	F1S GALV
	16	d1	ROD 1½"φ	0	2¼	1 @ 20" NF ASTM	1/F	18	
SP1	4		SOLE PLATES						
	4	p8	PL 3 × 9	1	6½	O/F 1A ABOVE	1/N	567	GALV
	8	p10	PL ⅜ × 1½	0	4	STK.	1/O	5	
SP2	8		SOLE PLATES						
	8	p9	PL 2⅜ × 7½	1	5	1 @ 42½ x 30" x 4"	1/G	687	GALV
	16	p10	PL ⅜ × 1½	0	4	STK.	1/H	10	
			FABRIC PADS						
FP1	4		PAD ⅛ × 16	1	10½	P.O. 31591	1/Q	–	AS PER SPEC. 731.01
FP2	8		PAD ⅛ × 10	2	5½		1/R	–	
			ANCHOR BOLTS						
AB1	32		ROD 1½"φ	1	9	3 @ 20" NF 25794C	2/A	337	A36 GALV.
	32	SHOP	1½" HVY. HEX NUT			NF 25794C	2/C	30	A307 GALV.
AB2	16		ROD 1"φ	3	3	STK.	2/D	139	A36
	16	SHOP	1" STD. ROUND WASH.			STK. Res	2/E	1	COMM. GRADE
	16	SHOP	1" HVY. HEX NUT			NF 25794C	2/F	5	A307
			SHIMS						
SH1	32		PL ¼ × 2	0	9	2 @ 20" NF 25794C	1/T	41	
W1	16	SHOP	½ STD. RD. WASH			NF	2/B	1	COMM. GRADE GALV.
W2	16	SHOP	½ STD. RD. CLIPPED WASH.			25794C	2/G	1	
								6098 #	

IT. NO. 506.99 | BR. NO. 4 | PROJ. NO. F020-1(10)

FOR APPROVAL | **FOR FILES & FIELD**

STEEL: ASTM. [ ] A36 [ ] A572 GR. [ ] [X] A588 GR. [ ] Unless Noted
WELDING ELECTRODE: [ ] E70 [X] See Welding Proc. [ ] None
SHOP CONN: [ ] Bolted [X] Welded [ ] None
FIELD CONN: [ ] Bolted [ ] Welded [X] None
HOLES: [ ] 13/16 [ ] 15/16 [ ] [X] AS Noted [ ] None
PAINT: [X] None [ ] Shopcoat [X] Galv. After Fab. [X] As Noted
SPECIAL PAINT: NONE
SPECIAL CLEANING: [X] Blast Clean [ ] None SSPC-SP6

BRIDGE SHOES

APPROVED: 5-17-84		
PRINT DIST.		
7	4-11-84	APP.
8	6-7-84	FAB.
		F&F.
7	5-18-84	APP

Bancroft & Martin Inc.
South Portland, Maine 04106

JOB: T.H. 22 OVER U.S. RTE. 4 E.B. & W.B. RUTLAND, VERMONT

CUSTOMER: EARTH CONSTRUCTION
DESIGNER: STATE OF VERMONT AGENCY OF TRANS.

REV. △		
CHECKED	3/23/84	CT
DRAWN	2-24-84	RLA

ORDER NO.	JOB NO.	DRAWING NO.	REV.
	4-11	51-1	△

TENSOR 921-07

HARLAN F. SPILLER CO. INC.