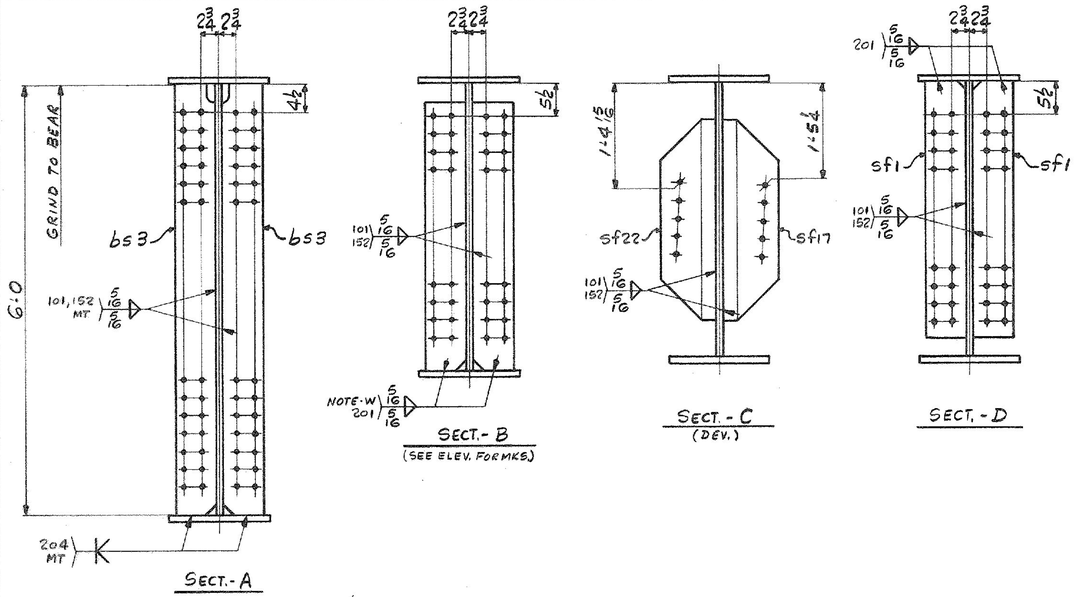

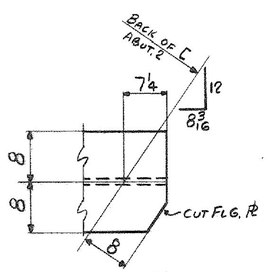

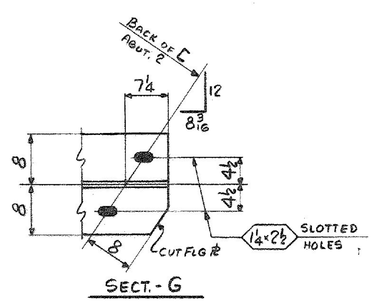

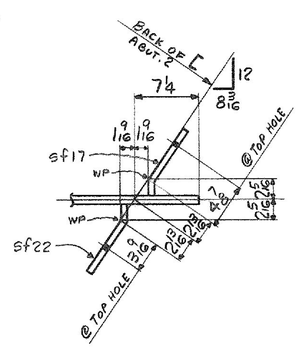

SHOP NOTE - W

WELD SIZE SHOWN SHALL BE INCREASED BY THE AMOUNT OF GAP, IF ANY, BETWEEN EDGE OF CONN. PL AND TOP OF BOTTOM FLANGE PL. (MAX. GAP = 1/8")

WORK THIS DWG. WITH DWG. 52-20

12-5-84 △2 AS NOTED
△1 CHANGE FLG SPL LOCATIONS

ALL CONNECTIONS DETAILED ON THIS DRAWING REPRESENT BANCROFT & MARTIN INC. STANDARDS. IN APPROVING THIS DRAWING FOR FABRICATION, THE ARCHITECT AND/OR ENGINEER ASSUMES THE RESPONSIBILITY FOR THE STRUCTURAL INTEGRITY OF ALL CONNECTIONS SHOWN.

SHIP — BILL OF MATERIAL — JOB NO. 4-7 — DRAWING NO. 52-21 — REV. △2

MARK	NO.	MARK	SHAPE	LENGTH		WT.	ITEM NO.	WT.	REMARKS
HG3C	1		GIRDER						
△2	1	wp1	PL 5/8 × 49¼	75	9 3/16	50"×76'7	1/B		CVN
	1	wp2	PL 5/8 × 72 5/16	73	2	73½"×22'5	1/D	8248	
△2	1	tf1	PL 7/8 × 16	74	2 7/8	1@95'8	1/I		
	1	bf2	PL 1" × 16	74	5 1/8	1@94'1	1/G	4052	BENT
△2	1	bf1	PL 1" × 16	74	8 3/16	1@95'8	1/S		
	1	tf3	PL 1" × 16	32	9¼	1@32'8	1/L	1784	
	1	tf4	PL 1" × 16	2	0	1@17'5	1/P	109	
	1	tf2	PL 1" × 16	39	1	1@39'5	1/M	2128	
	2	sp1	PL ½ × 42	1	7	Pcs. 1@ 7'6 12'0	2/A	226	
	2	sp2	PL 5/8 × 16	2	4	2@14'1	2/B	159	
	4	sp3	PL 5/8 × 7	2	4	2@14'1½ × 14'1	2/C	139	CVN
	1	sp4	PL 3/8 × 16	1	1 1/8	Pcs. 1@ 22'×12'0	2/D	24	
	1	sp5	PL ¼ × 16	1	1 1/8	HP 23X8 75×120	2/E	16	
△2	1	wp3	PL 5/8 × 3 3/8	3	10		1/B	28	CVN
	2	bs3	PL 7/8 × 7	6	0	Pc. 3 1/2 OR 1@39'9" × 12'0 3/4	2/H	250	MIE
	8	sf1	PL ½ × 7	3	7	18 @ 20 Pc. 3 1/2 OR	2/I	341	
	1	sf5	PL	3	9	2@2' 2'5"	2/K	45	
	1	sf7	PL	3	9 3/8		2/K	45	
	1	sf11	PL	4	0 5/16		2/L	48	
	1	sf13	PL ½ × 7	4	2 3/8		2/M	50	
	1	sf22	PL ½ × 34	0	9	3@9¼ × 12'0	2/N	43	BENT
	1	sf17	PL ½ × 34	0	8¾	Pcs. 3 1/2	2/N	42	BENT
						Pcs. 1, 15, 1, 11, 14 + 8	32	79.5	#
	1	SP2	SOLE PLATE						DET. ON DWG. 51-1 (JOB No. 4-11)

IT. NO. 506.91 | BR. NO. 4 | PROJ. NO. F020-1(10)

FOR APPROVAL | **FOR FILES & FIELD**

STEEL: ASTM. [ ] A36 [ ] A572 GR. [X] A588 GR. [ ] Unless Noted
WELDING ELECTRODE: [ ] E70 [X] See Welding Proc. [ ] None
SHOP CONN: [ ] Bolted [X] Welded [ ] None
FIELD CONN: [X] Bolted [ ] Welded [ ] None
HOLES: [ ] 13/16 [X] 15/16 [ ] [X] Unless Noted [ ] None
PAINT: [X] None [ ] Shopcoat [ ] Galv. After Fab. [ ] As Noted
SPECIAL PAINT:
SPECIAL CLEANING: [X] Blast Clean [ ] None SSPC-SP6

GIRDER - HG3C

APPROVED: 5-17-84

PRINT DIST.		
7	4-11-84	APP.
8	6-27-84	FAB.
NR	—	F&F.
7	10-4-84	APP
8	10-4-84	FAB
7	12-7-84	APP
8	12-7-84	FAB
REV. △1	10-3-84	JCM
CHECKED	4/2/84	GK
DRAWN	3-8-84	ELC

Bancroft & Martin Inc.
South Portland, Maine 04106

JOB: T.H. 22 OVER U.S.4 E.B. & W.B.
RUTLAND, VERMONT

CUSTOMER: M & J CONSTRUCTION CO.

DESIGNER: STATE OF VERMONT, AGENCY OF TRANSP.

ORDER NO.	JOB NO.	DRAWING NO.	REV.
	4-7	52-21	△2

TENSOR 921-08

HARLAN F. SPILLER CO. INC. 34595