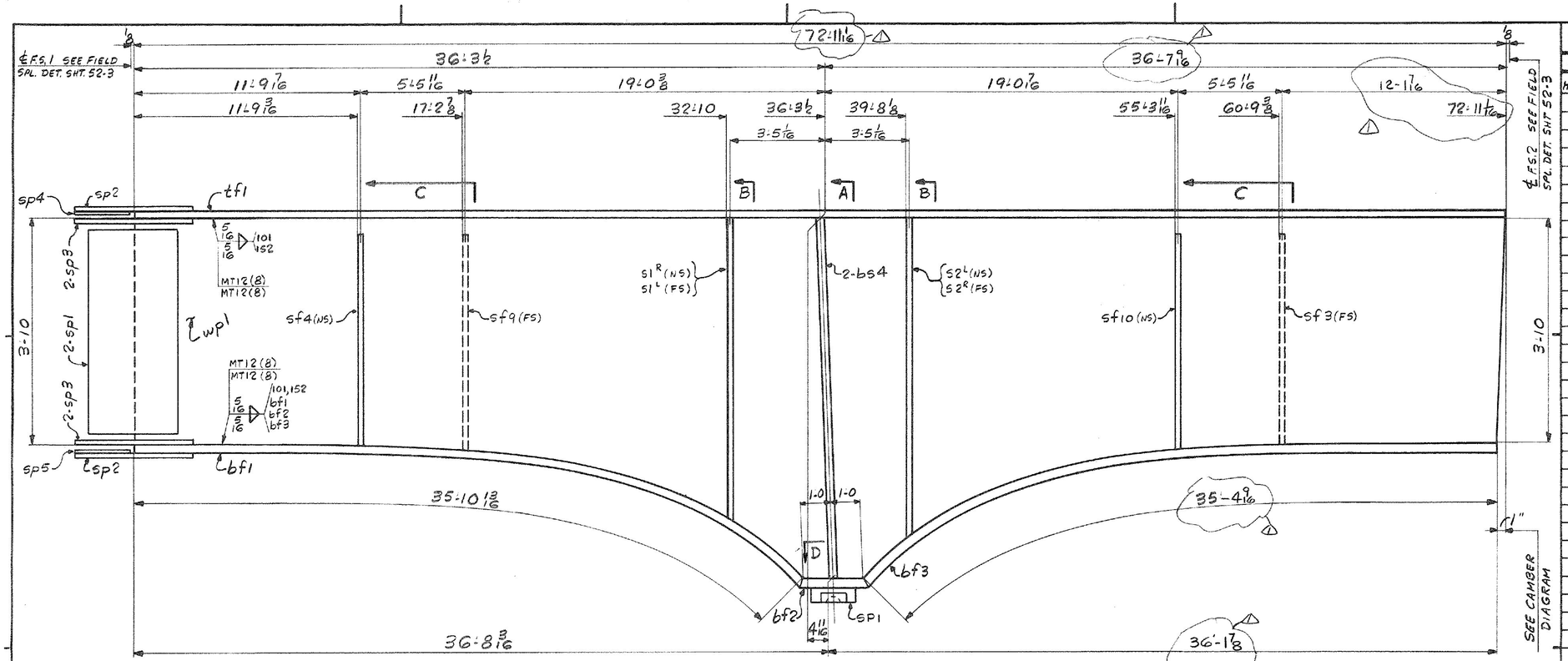

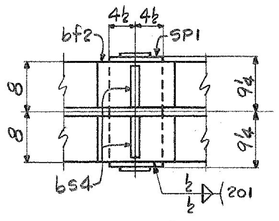

SECT.- D

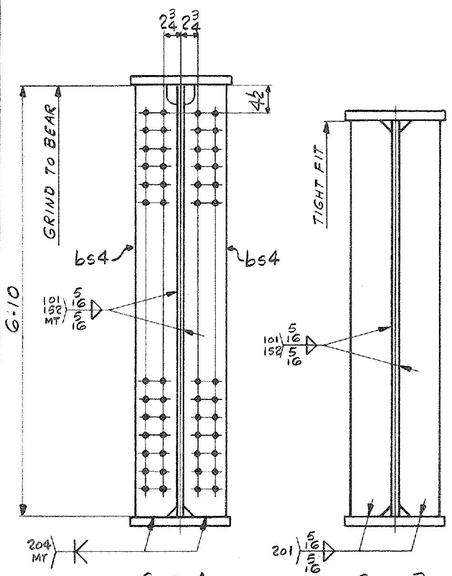

SECT.- A

SECT.- B
(SEE ELEV. FOR MKS.)

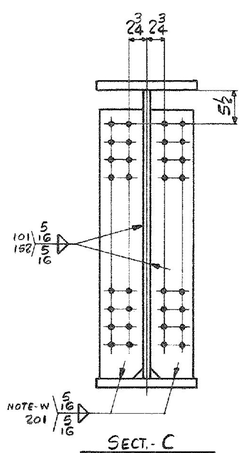

SECT.- C
(SEE ELEV. FOR MKS.)

ONE - GIRDER - HG3B

FOR GIRDER STANDARD DETAILS SEE DWG. 52-3
FOR WEB & CUTTING SK. & FLG. PL ASSY SEE DWG. 52-2
FOR SHOP ASSEMBLY DIAGRAM SEE DWG. 52-1

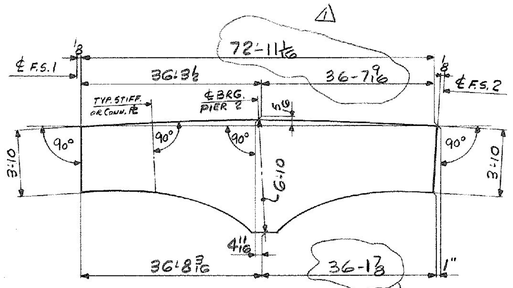

CAMBER DIAGRAM

SHOP NOTE- W

WELD SIZE SHOWN SHALL BE INCREASED BY THE AMOUNT OF GAP, IF ANY, BETWEEN EDGE OF CONN. PL AND TOP OF BOTTOM FLANGE PL. (MAX. GAP = 1/8").

△ AS NOTED

SHIP MARK	NO.	MARK	SHAPE	LENGTH		WT.	ITEM NO.	WT.	REMARKS
HG3B			GIRDER						
△	1	wp1	PL 5/8 × 82	72	11 1/16	1@72'-11	1/C	8678	CVN
△	1	tf1	PL 1 1/4 × 16	72	11 1/16	1@72'-11	1/T	4963	
	1	bf1	PL 1 1/4 × 16	35	10 13/16	1@36'-3	1/N	2443	BENT
	1	bf2	PL 1 1/4 × 16	2	0 5/16	1@10'-0	1/Q	138	
△	1	bf3	PL 1 1/4 × 16	35	4 9/16	1@35'-5	1/O	2408	BENT
	2	sp1	PL 1/2 × 42	1	7	2@3'-10 9/16 × 12'	2/A	226	
	2	sp2	PL 5/8 × 16	2	4	2@19'-1	2/B	159	
	4	sp3	PL 5/8 × 7	2	4	2@19'-10 7/16 × 19'-1	2/C	139	CVN
	1	sp4	PL 3/8 × 16	1	1 1/8	1@3'-10 28 × 28 = W12×28	2/D	24	
	1	sp5	PL 1/4 × 16	1	1 1/8	1@3'-10 9/16 × 10 1/2"	2/E	16	
	2	S1R/L	PL 7/8 × 7	6	3 3/16	2@28'-7 1/2 × 12'-0 1/4	2/O	261	1R, 1L
	2	S2R/L	PL 7/8 × 7	6	5 9/16	2@ 31'-0 1/2	2/O	269	1R, 1L
	2	bs4	PL 7/8 × 7	6	10	1@28'-7 1/2 × 13'-2 3/4	2/G	285	MIE
	1	sf4	PL 1/2 × 7	3	7 15/16	1@4'-2.5 1@9'-2.0	2/J	44	
	1	sf10	PL 1/2 × 7	3	11 13/16	1@ 5'-5.5	2/L	47	
	1	sf9	PL 1/2 × 7	3	11 1/8	1@5'-5.5, 5'-6.5'-M	2/L	47	
	1	sf3	PL 1/2 × 7	3	7 13/16		2/J	43	
								20,190	#
	1	SP1	SOLE PLATE						DET. ON DWG. 51-1 (JOB. NO. 4-11)

JOB NO. 4-7 | DRAWING NO. 52-14 | REV. △

IT. NO. 506.91 | BR. NO. 4 | PROJ. NO. F020-1(10)

FOR APPROVAL | **FOR FILES & FIELD**

STEEL: ASTM. [ ] A36 [ ] A572 GR. [X] A588 GR. [ ] Unless Noted [ ]
WELDING ELECTRODE: [ ] E70 [X] See Welding Proc. [ ] None [ ]
SHOP CONN: [ ] Bolted [X] Welded [ ] None
FIELD CONN: [X] Bolted [ ] Welded [ ] None
HOLES: [ ] 13/16 [X] 15/16 [ ] Unless Noted [ ] None
PAINT: [X] None [ ] Shopcoat [ ] Galv. After Fab. [ ] As Noted
SPECIAL PAINT:
SPECIAL CLEANING: [X] Blast Clean [ ] None SSPC-SP6

GIRDER - HG3B

APPROVED: 5-17-84		
PRINT DIST.		
7	4-11-84	APP.
8	6-27-84	FAB.
N/R		F&F.
7	12-7-84	APP
8	12-7-84	FAB

Bancroft & Martin Inc.
South Portland, Maine 04106

JOB: T.H. 22 OVER U.S. 4 E.B. & W.B. RUTLAND, VERMONT

CUSTOMER: M & J CONSTRUCTION CO.

DESIGNER: STATE OF VERMONT, AGENCY OF TRANSP.

REV. △	12-5-84	JCM
CHECKED	4/2/84	GK
DRAWN	3-6-84	ELC

ORDER NO.	JOB NO.	DRAWING NO.	REV.
	4-7	52-14	△

TENSOR-921-08