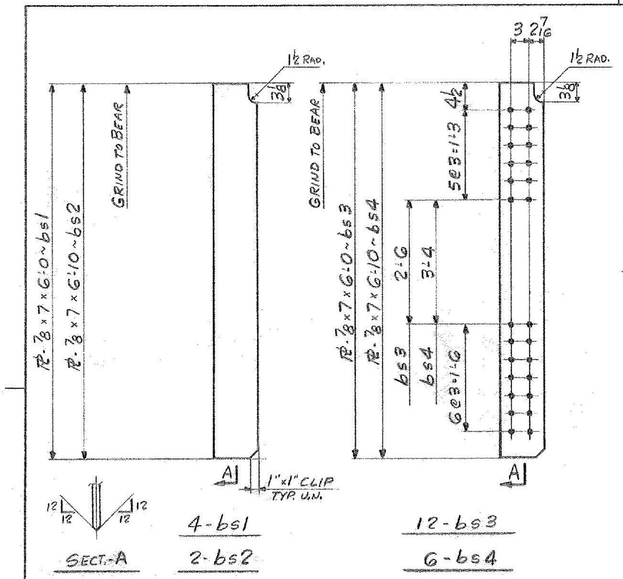

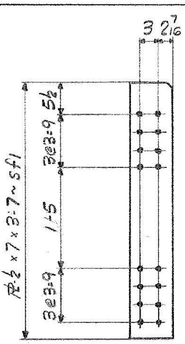

48 - sf1

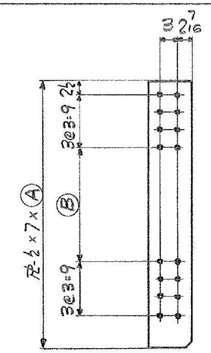

X	MARK	QTY	Ⓐ	Ⓑ
1R	sf2	3	3'-7 7/16	1'-5 7/16
13L	sf3	3	3'-7 13/16	1'-5 13/16
10R	sf4	3	3'-7 15/16	1'-5 15/16
16R	sf5	3	3'-9	1'-7
4L	sf6	3	3'-9 1/8	1'-7 1/8
19L	sf7	3	3'-9 3/8	1'-7 3/8
1L	sf8	3	3'-9 9/16	1'-7 9/16
10L	sf9	3	3'-11 1/8	1'-9 3/16
13R	sf10	3	3'-11 13/16	1'-9 7/8
16L	sf11	3	4'-0 5/16	1'-10 5/16
4R	sf12	3	4'-1 3/16	1'-11 3/16
19R	sf13	3	4'-2 3/8	2'-0 3/8

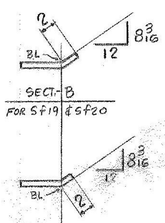

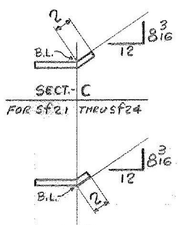

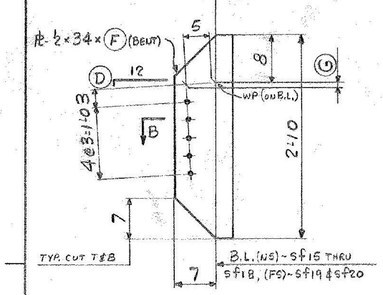

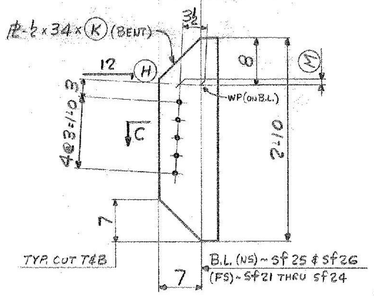

MARK	QTY	Ⓓ	Ⓕ	Ⓖ
sf15	1	3/16	8 3/4	1/16
sf16	1	1/4	8 3/4	1/8
sf17	1	9/16	8 3/4	1/4
sf18	1	7/8	8 3/4	3/8
sf19	1	1/8	9"	1/16
sf20	1	7/16	9"	3/16

MARK	QTY	Ⓗ	Ⓚ	Ⓜ
sf21	1	3/16	9"	1/16
sf22	1	1/4	9"	1/16
sf23	1	9/16	9"	3/16
sf24	1	7/8	9"	1/4
sf25	1	1/8	8 3/4	1/16
sf26	1	7/16	8 3/4	1/8

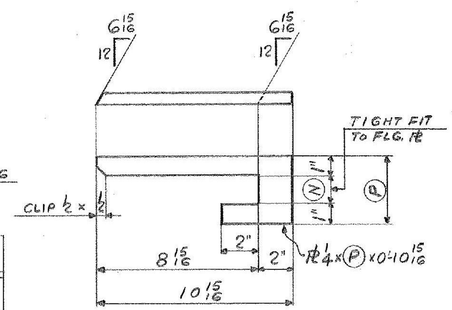

MARK	QTY	Ⓝ	Ⓟ
fb1 R/L	5/5	1"	3"
fb2 R/L	2/2	1¼	3¼

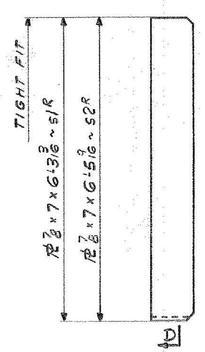

4/4 - s1 R/L

4/4 - s2 R/L

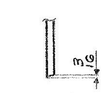

SECT.-D

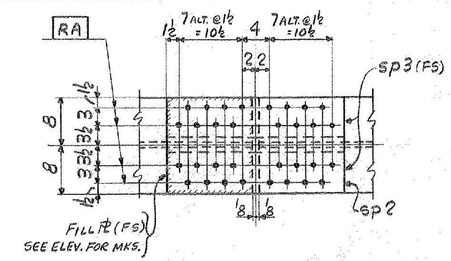

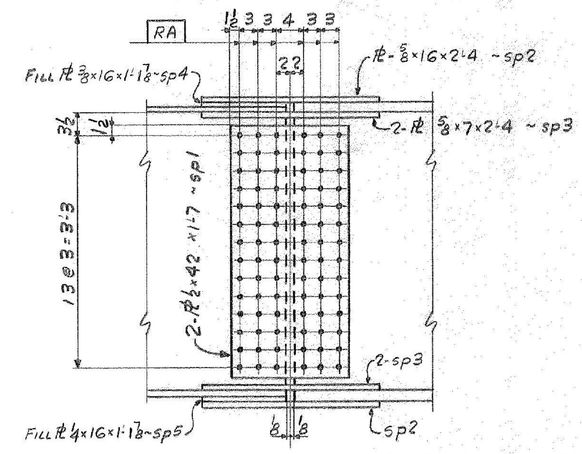

FIELD SPLICE DETAIL

SHOP NOTE:

HOLES NOTED RA TO BE SUB-PUNCHED OR SUB-DRILLED 11/16 ϕ AND REAMED TO 15/16 ϕ WITH ALL PARTS ASSEMBLED OR DRILLED FULL SIZE (15/16 ϕ) FROM THE SOLID WITH ALL PARTS ASSEMBLED. ALL GIRDERS MUST BE ASSEMBLED PER SHOP ASSEMBLY DIAGRAM (DWG. 52-1) PRIOR TO REAMING OR DRILLING.

NOTE:

HOLES - 15/16 ϕ (U.N.)

IT. NO. 506.91 | BR. NO. 4 | PROJ. NO. F020-1(10)

FOR APPROVAL | **FOR FILES & FIELD**

GIRDER COMPONENTS

APPROVED: 5-17-84		
PRINT DIST.		
7	4-11-84	APP.
8	6-27-84	FAB.
NR		F&F.

Bancroft & Martin Inc.
South Portland, Maine 04106

JOB: TH 22 OVER U.S.4 E.B. & W.B.
RUTLAND, VERMONT

CUSTOMER: M & J CONSTRUCTION CO.

DESIGNER: STATE OF VERMONT, AGENCY OF TRANSP.

REV. △			ORDER NO.	JOB NO.	DRAWING NO.	REV.
CHECKED	4/2/84	GK		47	52-3	△
DRAWN	2-29-84	ELC				

TENSOR 921-08

HARLAN F. SPILLER CO.