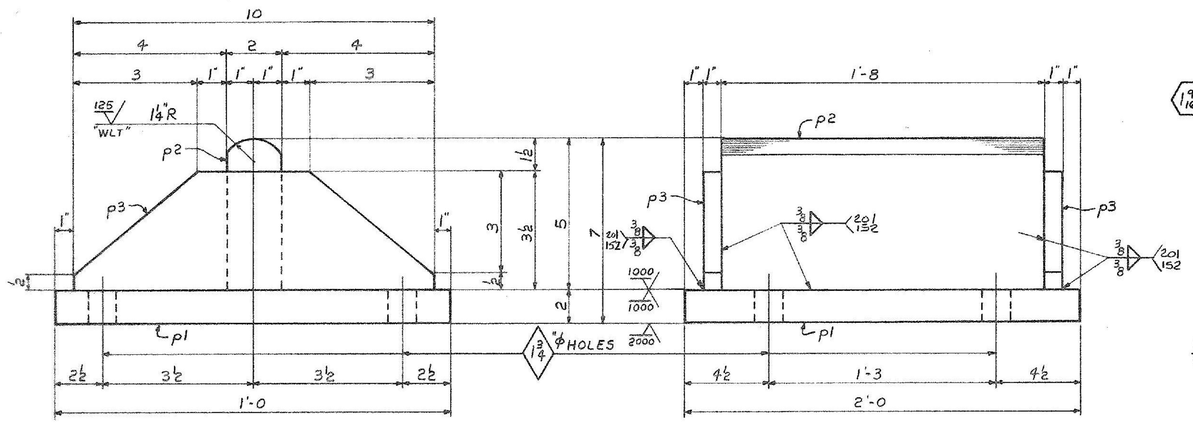

5 ~ FIXED BEARINGS ~ MK. FB1
(MAT'L: ASTM A588)

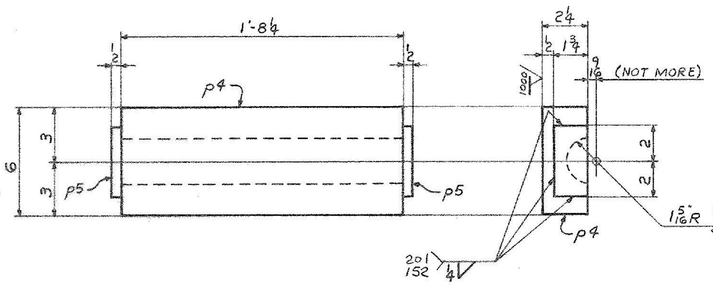

5 ~ SOLE PLATES ~ MK. SP1
(MAT'L: ASTM A588)

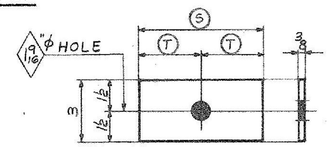

WASHERS
(GALV.)

	MARK	Nº REQ'D	S	T
ABUT. 1	W1	10	10	5
ABUT. 2	W2	10	6	3
PIER 1	W3	10	6 1/4	3 1/8

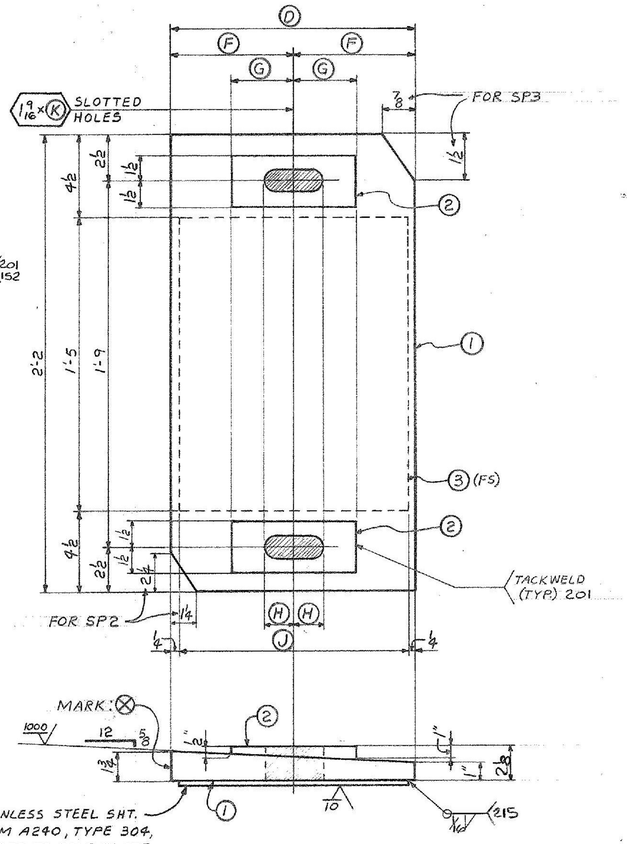

3 ~ STAINLESS STEEL SHT. ASTM A240, TYPE 304, WELDED TO SOLE PLATE. EXPOSED SURFACE TO HAVE SURFACE ROUGHNESS OF 10 MICROINCHES, RMS, MAX.

SOLE PLATES
(SEE NOTE 2 & NOTE 3)

	MARK	Nº REQ'D	D	F	G	H	J	K	1	2	3
ABUT. 1	SP2	5	1'-3	7 1/2	5 1/2	2 7/8	1'-2 1/2	5 3/4	p6	p7	p8
ABUT. 2	SP3	5	1'-1 1/2	6 3/4	3 1/2	1 5/8	1'-1	3 1/4	p9	p10	p11

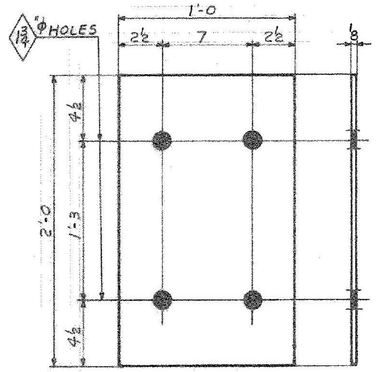

5 ~ PREFORMED FABRIC PADS ~ MK. FP1
(AS PER SECT. 731.01 OF VERMONT STD. SPECS.)

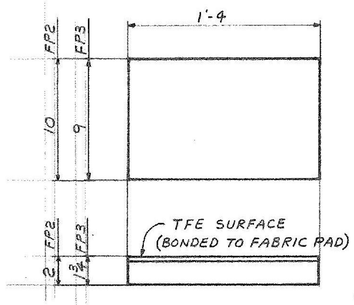

ABUT. 1 5 ~ PREFORMED FABRIC PADS ~ MK. FP2
ABUT. 2 5 ~ PREFORMED FABRIC PADS ~ MK. FP3
(AS PER SECT. 731.01 & 731.10 OF VERMONT STD. SPECS.)

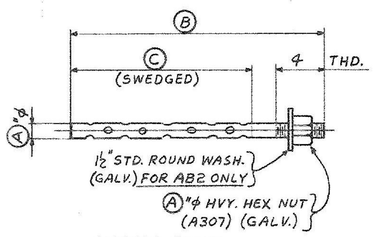

ANCHOR BOLTS
(GALV. PER ASTM A153 AFTER FAB.)

	MARK	Nº REQ'D	A	B	C
ABUT. 1 & 2	AB1	20	1 1/4	1'-9	1'-2
PIER 2	AB2	20	1 1/2	1'-10	1'-5

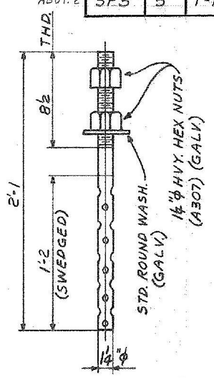

PIER 1 10 ~ ANCHOR BOLTS ~ MK. AB3
(GALV. PER ASTM A153 AFTER FAB.)

NOTES

1. √ DENOTES MAXIMUM SURFACE ROUGHNESS ALLOWABLE (IN MICRO INCHES), AS DEFINED IN A.S.A. B46.1 - SURFACE ROUGHNESS, WAVINESS & LAY, PART I.
2. SOLE PLATES SP2 & SP3 SHALL BE GALVANIZED AS PER SPECIAL PROVISION 731.06 (A36 STEEL ONLY, NOT STAINLESS STEEL.)
3. PRIOR TO GALVANIZING, ALL CORNERS AND EDGES OF STEEL PLATES SHALL BE GROUND TO A 1/16" RADIUS.

ALL CONNECTIONS DETAILED ON THIS DRAWING REPRESENT BANCROFT & MARTIN INC. STANDARDS. IN APPROVING THIS DRAWING, FOR FABRICATION, THE ARCHITECT AND/OR ENGINEER ASSUMES THE RESPONSIBILITY FOR THE STRUCTURAL INTEGRITY OF ALL CONNECTIONS SHOWN.

SHIP MARK	NO.	MARK	BILL OF MATERIAL SHAPE	LENGTH		WT.	ITEM NO.	WT.	REMARKS
									JOB NO. 4-49 / DRAWING NO. 51-1 / REV. △
FB1	5		FIXED BEARINGS						
	5	p1	PL 2 × 12	2	0	PL 1 1/8 × 8 3 / PL 31755	1/B	817	F2S A588
	5	p2	PL 2 × 5	1	8		1/C	284	F2E
	10	p3	PL 1" × 3 1/2	0	10	Rcs 1 @ 38 × 48 / ALSO CUTS 44-50 10, 1K, 1L	1/D	99	F1E
SP1	5		SOLE PLATES						
	5	p4	PL 2 1/4 × 6	1	8 1/4	PL 5 2 × 20 31755	1/E	388	F1S (ALSO CUTS 4-50 1E) A588
	10	p5	PL 1/2 × 1 3/4	0	4	Cut's	1/F	10	
SP2	5		SOLE PLATES						
	5	p6	PL 1 3/4 × 15	2	2	* SEE BELOW	1/I	968	F1S GALV.
	10	p7	PL 1" × 3	0	11	FROM 1D ABOVE	1/K	94	GALV.
	5	p8	SHT. 14 GA. × 14 1/2	1	5	3 @ 3 × 120 NO. 31756 / W-47 1D / 4-50 1M	1/M	26	F1S STAINLESS STL. A240 TYPE 304
									* ABL NG TOP × IN BELOW
SP3	5		SOLE PLATES						
	5	p9	PL 1 3/4 × 13 1/2	2	2	FROM 1I	1/J	871	F1S GALV.
	10	p10	PL 1" × 3	0	7	FROM 1D ABOVE	1/L	60	GALV.
	5	p11	SHT. 14 GA. × 13	1	5	FROM 1M ABOVE	1/N	24	F1S STAINLESS STL. A240 TYPE 304
			WASHERS						
W1	10		PL 3/8 × 3	0	10	RCS. 1 @ 30'-0	1/P	32	GALV.
W2	10		PL 3/8 × 3	0	6		1/Q	19	
W3	10		PL 3/8 × 3	0	6 1/4		1/R	20	
			PREFORMED FABRIC PADS						
FP1	5		PAD 1/8 × 12	2	0	MAINE INDUST. P.O.	1/T	—	
FP2	5		PAD 2 × 10	1	4	31776	1/U	—	TFE SURFACE 1-SIDE
FP3	5		PAD 1 3/4 × 9	1	4		1/V	—	TFE SURFACE 1-SIDE
			ANCHOR BOLTS						
AB1	20		ROD 1 1/4" φ	1	9	L @ 20'-0 PO. 31755	2/B	14 1/2	* 2 D GALV. 4-50 2D 1/2 D
	20		1 1/4" HVY HEX NUT			STK. RES.	2/F	16	GALV. A307
AB2	20		ROD 1 1/2" φ	1	10	20' @ 20'-0 PO. 31755	2/C	220	ALSO CUTS 4-50 2C GALV. 4-49 1K, 1M
	20		1 1/2" HVY HEX NUT			K-L-M STK.	2/G	26	A307
	20		STD. WASH. FOR 1 1/2" φ BOLT			NO. 31756	2/I	8	
AB3	10		ROD 1 1/4" φ	2	1	FROM AB ABOVE	2/D	87	GALV.
	20		1 1/4" HVY. HEX NUT			STK. RES.	2/F	16	A307
	10		STD. WASH. FOR 1 1/4" φ BOLT			STK. RES.	2/J	5	
								4,236	#
* 12 PO	31755	1 0 1/2" × 10 5/8" × 1/2"							
PO	31763								

IT. NO. 506.99 | BR. NO. 5 | PROJ. NO. F-EGC-F-020-1(10)

FOR APPROVAL | **FOR FILES & FIELD**

STEEL: ASTM. [X] A36 [ ] A572 GR. [ ] A588 GR. [X] Unless Noted
WELDING ELECTRODE: [ ] E70 [X] See Welding Proc. [ ] None
SHOP CONN: [ ] Bolted [X] Welded [ ] None
FIELD CONN: [ ] Bolted [X] Welded [ ] None
HOLES: [ ] 13/16 [ ] 15/16 [X] AS NOTED [ ] Unless Noted [ ] None
PAINT: [X] None [ ] Shopcoat [X] Galv. After Fab. [X] As Noted
SPECIAL PAINT: NONE
SPECIAL CLEANING: [X] Blast Clean [ ] None SSPC-SP6

BRIDGE SHOES (WESTBOUND BRIDGE)

APPROVED: 2-1-85		
PRINT DIST.		
7	12-27-84	APP.
8	2-6-85	FAB.
		F&F.
0816	2-19-86	VAT
REV. △		
CHECKED	12-20-84	RW
DRAWN	11-13-84	RLA

Bancroft & Martin Inc.
South Portland, Maine 04106

JOB: U.S. RTE. 4 W.B. OVER DORR DRIVE
RUTLAND, VERMONT

CUSTOMER: MASKELL FENCE CO.
DESIGNER: STATE OF VERMONT AGENCY OF TRANS.

ORDER NO.	JOB NO.	DRAWING NO.	REV.
	4-49	51-1	△

957-07

HARLAN F. SPILLER CO. INC.