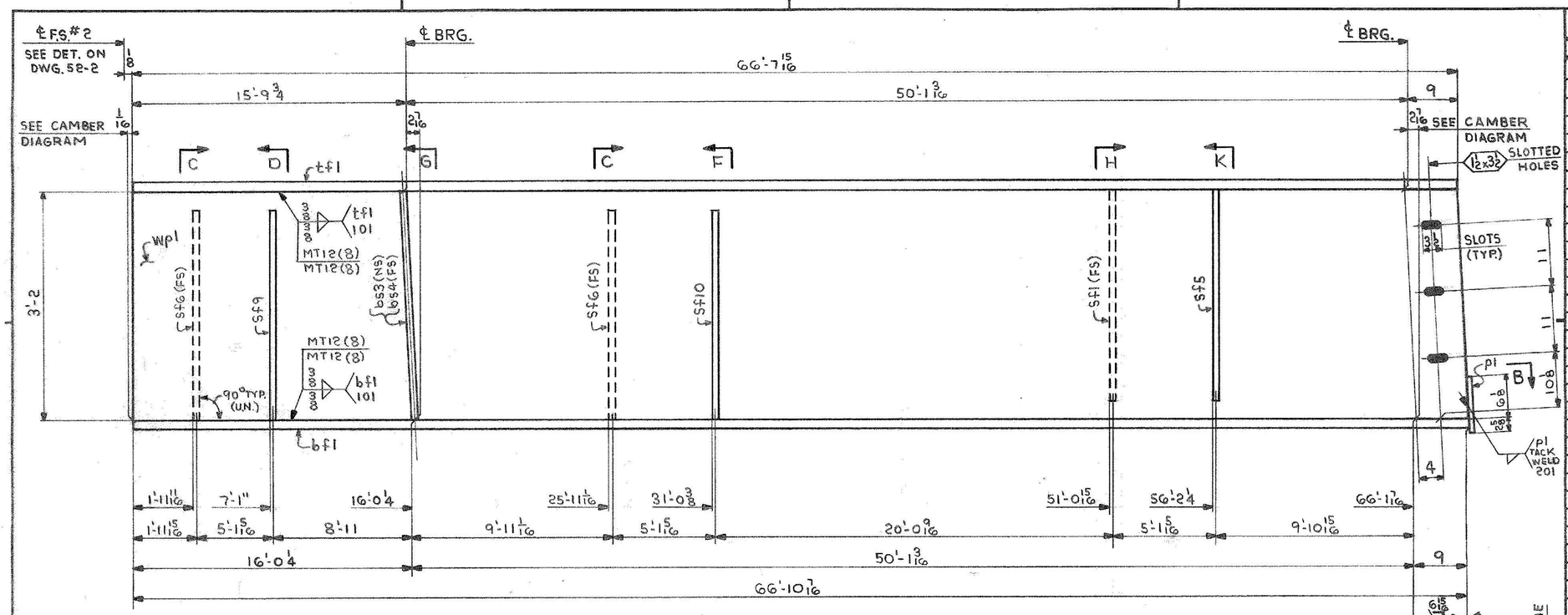

ONE-GIRDER-G2C
ONE-GIRDER-G3C
ONE-GIRDER-G4C
} ALIKE UNTIL REAMED

FOR GIRDER STANDARD DETAILS SEE DWG. 52-2.
FOR WEB & FLG. PL CUTTING & ASSEMBLY SEE DWG. 52-1.

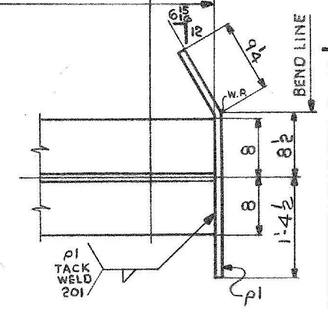

SECT.-B

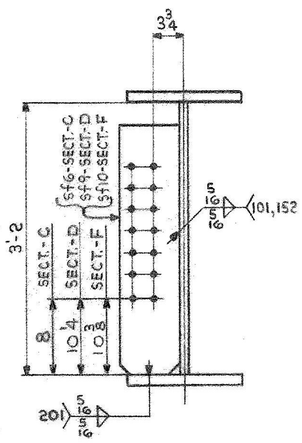

SECT.-C, D & F

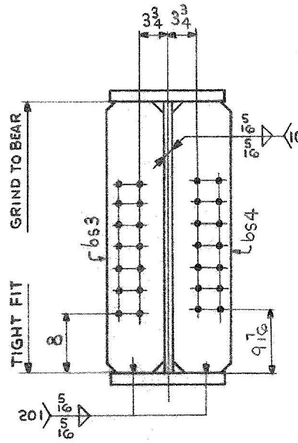

SECT.-G

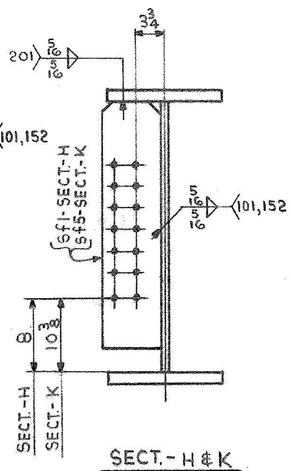

SECT.-H & K

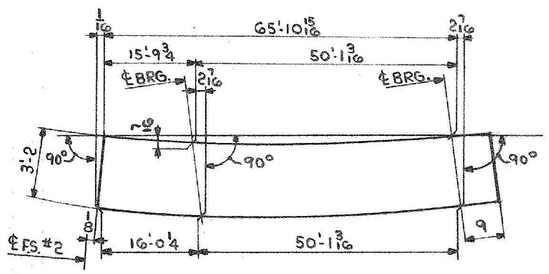

CAMBER DIAGRAM

SHIP MARK	NO.	MARK	SHAPE	LENGTH		WT.	ITEM NO.	WT	REMARKS
G2C	ONE		GIRDER						
G3C	ONE		GIRDER						
G4C	ONE		GIRDER						
	3	wp1	PL 1/2 x 38 7/16	66	10 7/16	3@ 39 x 67'-1	1/C	12,792	CVN
	3	tf1	PL 1 1/8 x 16	66	7 15/16	3@ 66'-10	1/I	12,249	CVN
	3	bf1	PL 1 1/8 x 16	66	10 7/16	3@ 67'-1	1/J	12,287	CVN
	3	bs3	PL 3/4 x 8	3	2	18@ 2'-0 18-3/0 55	1/P	194	
	3	bs4	PL 3/4 x 8	3	2	4-45 2@	1/P	194	
	3	sf1	PL 1/2 x 8	2	11	23@	1/Q	119	
	3	sf5	PL 1/2 x 8	2	11	21'-0	1/Q	119	
	6	sf6	PL 1/2 x 8	2	11	7@ 39 39 39	1/Q	238	
	3	sf9	PL 1/2 x 8	2	11	21@ CWB	1/Q	119	
	3	sf10	PL 1/2 x 8	2	11	4-45 2@	1/Q	119	
	3	p1	PL 1/4 x 8 3/4	2	10 1/4	From 1/4 x 10 72 x 206 Also CWB	1/S	64	BENT
						4-43, 44, 45		38,652	# SHIPPING WEIGHT
*	PAY WEIGHT								
	3		PL 1 1/8 x 16	12	0			2205	
	3		PL 7/8 x 16	54	7 15/16			7816	
	3		PL 1 1/8 x 16	22	0 1/4			4046	
	3		PL 7/8 x 16	44	10 3/16			6410	
								34,589	# PAY WEIGHT

IT. NO. 506.91 | BR. NO. 5 | PROJ. NO. F-EGC-F-020-1(10)

FOR APPROVAL | **FOR FILES & FIELD**

STEEL: ASTM. [ ] A36 [ ] A572 GR. [X] A588 GR. [ ] Unless Noted
WELDING ELECTRODE: [ ] E70 [X] See Welding Proc. [ ] None
SHOP CONN: [ ] Bolted [X] Welded [ ] None
FIELD CONN: [X] Bolted [ ] Welded [ ] None
HOLES: [ ] 13/16 [X] 15/16 [ ] [X] Unless Noted [ ] None
PAINT: [X] None [ ] Shopcoat [ ] Galv. After Fab. [ ] As Noted
SPECIAL PAINT: NONE
SPECIAL CLEANING: [X] Blast Clean [ ] None SSPC-SP6

GIRDERS-G2C, G3C & G4C

APPROVED: 2-1-85

PRINT DIST.		
7	12-21-84	APP.
8	2-11-85	FAB.
		F&F.
0816	11-14-85	VAT

REV. △
CHECKED RH 12-21-84
DRAWN DW 11-26-84

Bancroft & Martin Inc.
South Portland, Maine 04106

JOB: U.S. ROUTE 4 E.B. OVER DORR DRIVE RUTLAND, VERMONT

CUSTOMER: MASKELL FENCE CO.
DESIGNER: STATE OF VERMONT, AGENCY OF TRANS.

ORDER NO.	JOB NO.	DRAWING NO.	REV.
	4-46	52-10	△

957-08

HARLAN F. SPILLER CO. INC.