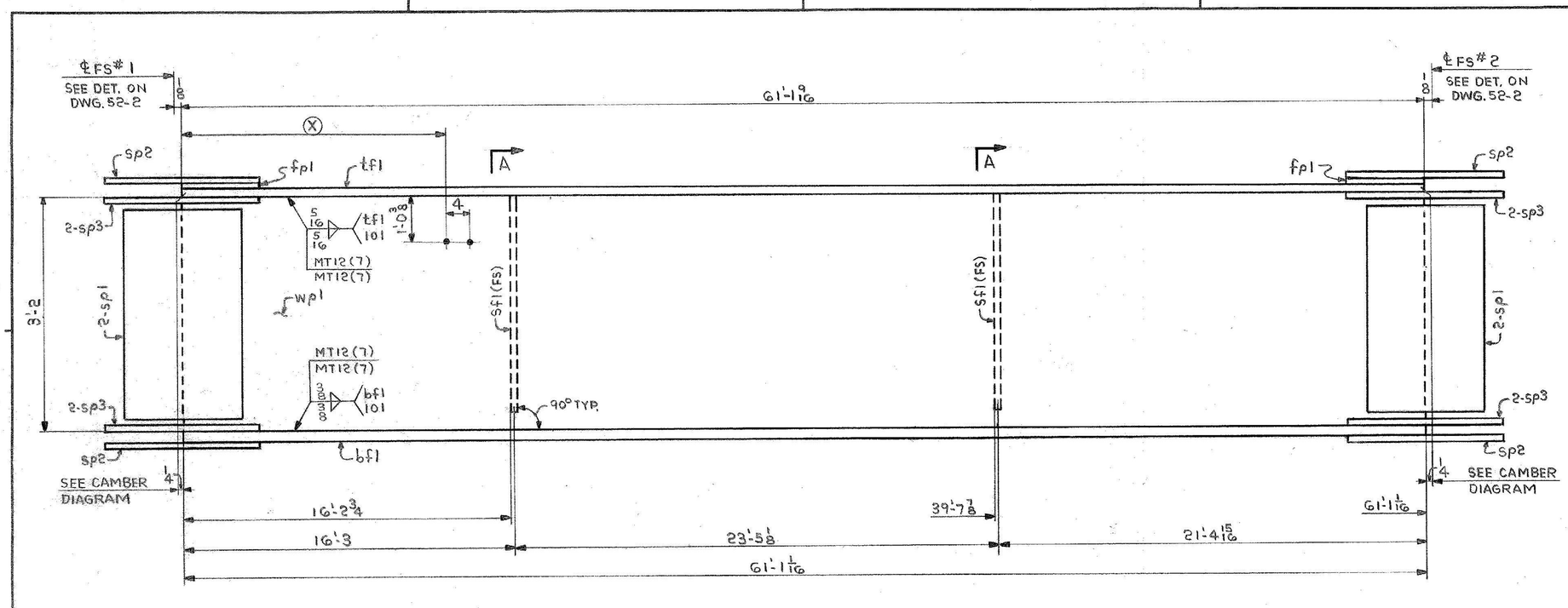

ONE-GIRDER-G5B

FOR GIRDER STANDARD DETAILS SEE DWG. 52-2.
FOR WEB & FLG. PL CUTTING & ASSEMBLY SEE DWG. 52-1.

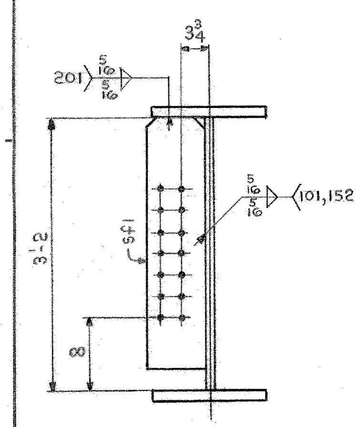

SECT.-A

DIM. (X)
2'-6
6'-6
10'-6
14'-6
18'-6
22'-6
26'-6
30'-6
34'-6
38'-6
42'-6
46'-6
50'-6
54'-6
58'-6

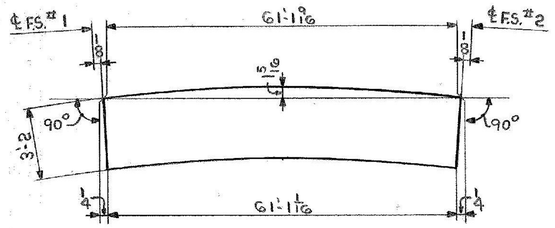

CAMBER DIAGRAM

SHIP	BILL OF MATERIAL					JOB NO. 4-46		DRAWING NO. 52-8	REV. △
MARK	NO.	MARK	SHAPE	LENGTH		WT.	ITEM NO.	WT	REMARKS
G5B	ONE		GIRDER						
	1	wpl	PL 1/2 x 39 5/16	61	1 9/16	4PL x 61'-4	1/B	3957	CVN
	1	tfl	PL 7/8 x 16	61	1 9/16	1 @ 61'-4	1/G	2912	Pl. 31934
	1	bfl	PL 1 1/8 x 16	61	1 1/16	1 @ 61'-4	1/H	3742	CVN
	4	spl	PL 3/8 x 36 1/2	1	7 1/2	38PL x 8'-8	1/L	303	CVN *
	4	sp2	PL 1/2 x 16	2	1 1/2	4 @ 11'-6	1/M	231	CVN *
	8	sp3	PL 1/2 x 7	2	1 1/2	4 @ 17'-10	1/N	202	CVN *
	2	fpl	PL 1/4 x 16	1	0 5/8	28PL x 28'-0 PL 31/35 ASG 18/15	1/O	29	ALSO CUTS 7-10-5 7-12-14-15 *
	2	sfl	PL 1/2 x 8	2	11	2 @ 21'-0 PL 31/35 ALSO CUTS 4-45 & 8	1/Q	79	
								11,449	# SHIPPING WEIGHT
*	PAY	WEIGHT							
	4		PL 3/8 X 36	1	6'4			279	
	4		PL 1/2 X 16	2	0'4			220	
	8		PL 1/2 X 7	2	0'4			193	
								11,376	# PAY WEIGHT

IT. NO. 506.91 | BR. NO. 5 | PROJ. NO. F-EGC-F-020-1(10)

FOR APPROVAL | **FOR FILES & FIELD**

STEEL: ASTM. [ ] A36 [ ] A572 GR. [X] A588 GR. [ ] Unless Noted
WELDING ELECTRODE: [ ] E70 [X] See Welding Proc. [ ] None
SHOP CONN: [ ] Bolted [X] Welded [ ] None
FIELD CONN: [X] Bolted [ ] Welded [ ] None
HOLES: [ ] 13/16 [X] 15/16 [ ] [X] Unless Noted [ ] None
PAINT: [X] None [ ] Shopcoat [ ] Galv. After Fab. [ ] As Noted
SPECIAL PAINT: NONE
SPECIAL CLEANING: [X] Blast Clean [ ] None SSPC-SP6

GIRDER-G5B

APPROVED: 2-1-85

PRINT DIST.		
7	12-27-84	APP.
8	2-11-85	FAB.
		F&F.
OLG	11-14-85	VAT

REV. △
CHECKED RW 12-21-84
DRAWN DW 11-20-84

Bancroft & Martin Inc.
South Portland, Maine 04106

JOB: U.S. ROUTE 4 E.B. OVER DORR DRIVE RUTLAND, VERMONT

CUSTOMER: MASKELL FENCE CO.
DESIGNER: STATE OF VERMONT, AGENCY OF TRANS.

ORDER NO.	JOB NO.	DRAWING NO.	REV.
	4-46	52-8	△

957-08

HARLAN F. SPILLER CO. INC.