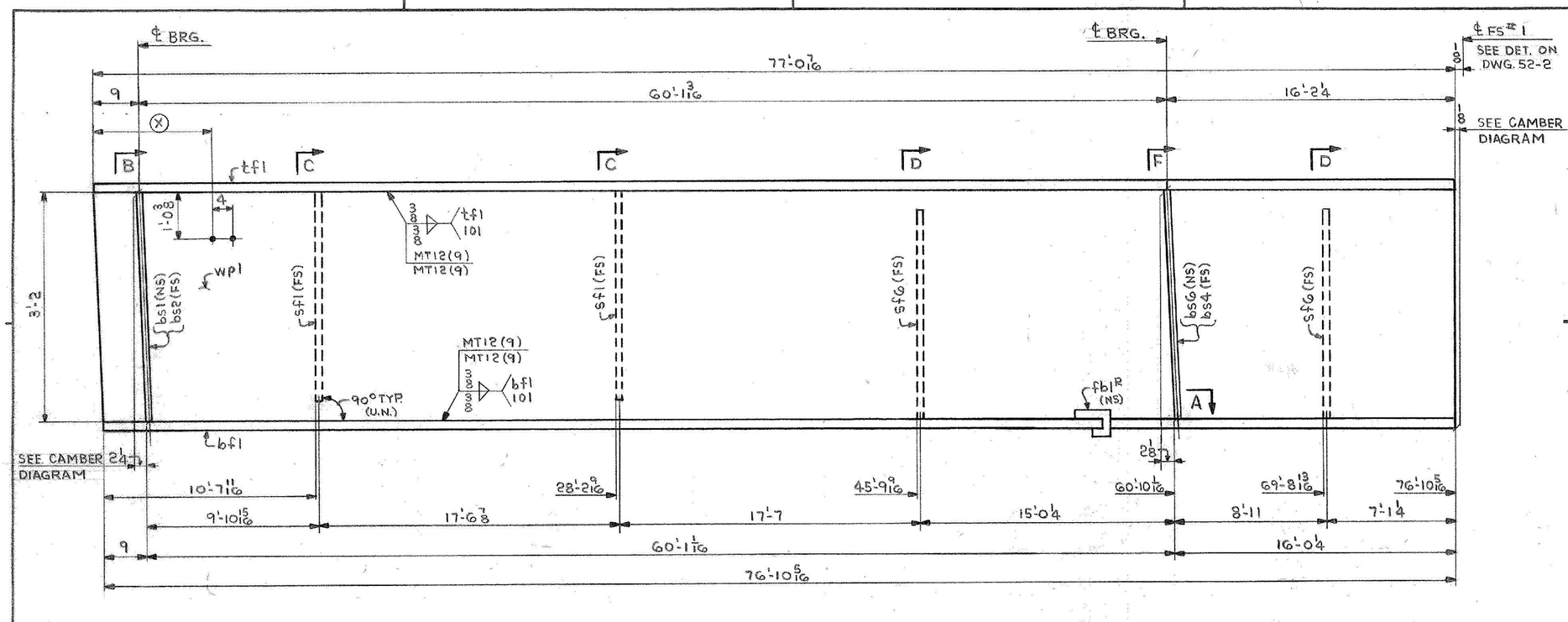

DIMENSION (X)		
1'-6	27'-6	55'-6
4'-6	31'-6	59'-6
7'-6	35'-6	63'-6
11'-6	39'-6	67'-6
15'-6	43'-6	71'-6
19'-6	47'-6	75'-6
23'-6	51'-6	

ONE-GIRDER-G5A

FOR GIRDER STANDARD DETAILS SEE DWG. 52-2.
FOR WEB & FLG. PL CUTTING & ASSEMBLY SEE DWG. 52-1.

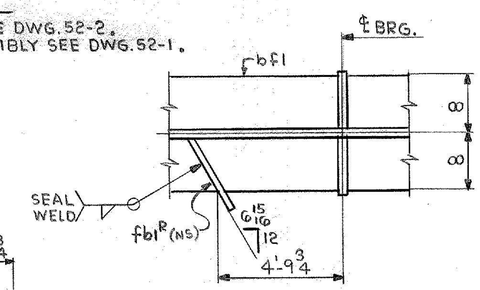

SECT.-A

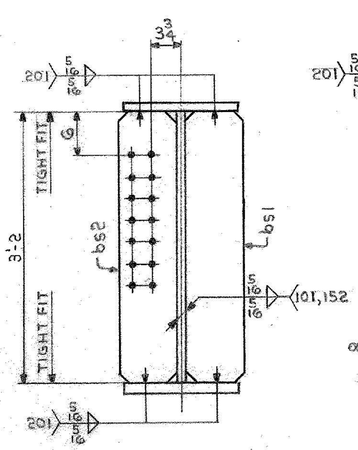

SECT.-B

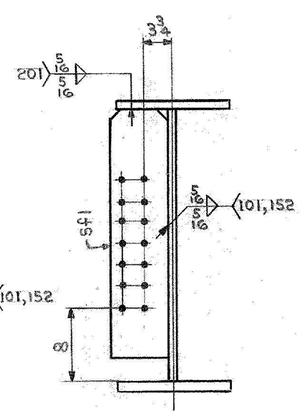

SECT.-C

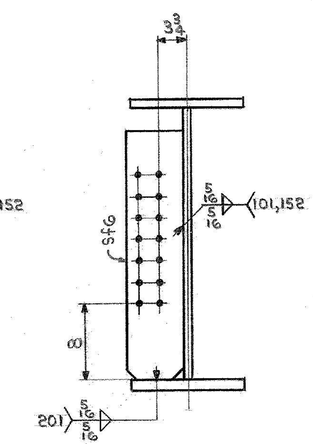

SECT.-D

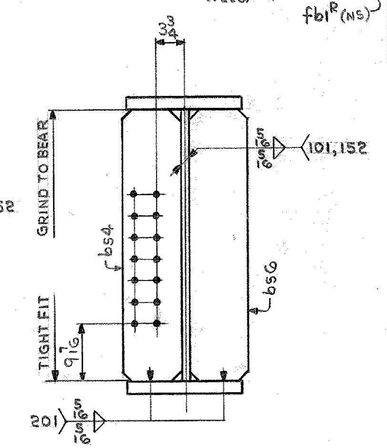

SECT.-F

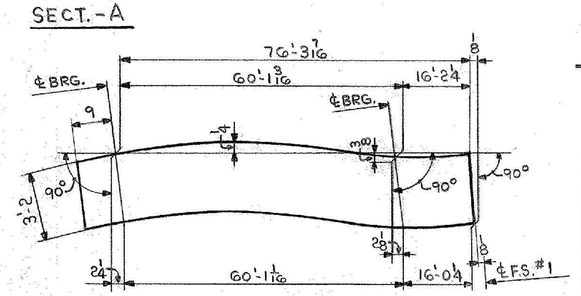

CAMBER DIAGRAM

SHIP	BILL OF MATERIAL					JOB NO. 4-46		DRAWING NO. 52-5	REV. △
MARK	NO.	MARK	SHAPE	LENGTH		WT.	ITEM NO.	WT	REMARKS
G5A	ONE		GIRDER						
	1	wp1	PL 1/2 x 38 5/8	77	0 9/16	77'-0 x 77'-3	1/A	4975	CVN P.O.
	1	tf1	PL 1 1/8 x 16	77	0 7/16	77'-0 77'-3	1/E	4718	CVN 51139 *
	1	bf1	PL 1 1/8 x 16	76	10 5/16	76'-0 77'-1	1/F	4708	CVN *
	1	bs1	PL 3/4 x 8	3	2	16 @ 2'-0	1/P	65	
	1	bs2	PL 3/4 x 8	3	2	P.O. 51255	1/P	65	
	1	bs4	PL 3/4 x 8	3	2	Also cuts	1/P	65	
	1	bs6	PL 3/4 x 8	3	2	11-45 2A	1/P	65	
	2	sf1	PL 1/2 x 8	2	11	23 @ 2'-0 P.O. 51255	1/Q	79	
	2	sf6	PL 1/2 x 8	2	11	36 @ 1'-45 2A	1/Q	79	
	1	fb1R	PL 1/4 x 38 1/8	0	10 3/8	Plan 19 28 @ 72X 2'-0 P.O. 31755 Also cuts in 4-43, -44, -45	1/R	2	
							14	821	#SHIPPING WEIGHT
*	PAY WEIGHT								
	1		PL 1 1/8 X 16	12	0			735	
	1		PL 7/8 X 16	65	0 7/16			3078	
	1		PL 1 1/8 X 16	22	0 1/4			1349	
	1		PL 7/8 X 16	54	10 1/16			2612	
							13	190	#PAY WEIGHT

IT. NO. 506.91 | BR. NO. 5 | PROJ. NO. F-EGC-F-020-1(10)

FOR APPROVAL | **FOR FILES & FIELD**

STEEL: ASTM. [ ] A36 [ ] A572 GR. [X] A588 GR. [ ] Unless Noted
WELDING ELECTRODE: [ ] E70 [X] See Welding Proc. [ ] None
SHOP CONN: [ ] Bolted [X] Welded [ ] None
FIELD CONN: [X] Bolted [ ] Welded [ ] None
HOLES: [ ] 13/16 [X] 15/16 [ ] [X] Unless Noted [ ] None
PAINT: [X] None [ ] Shopcoat [ ] Galv. After Fab. [ ] As Noted
SPECIAL PAINT: NONE
SPECIAL CLEANING: [X] Blast Clean [ ] None SSPC-SP6

GIRDER-G5A

APPROVED: 2-1-85

PRINT DIST.		
7	12-27-84	APP.
8	2-11-85	FAB.
		F&F.
08-16	11-14-85	VAT

Bancroft & Martin Inc.
South Portland, Maine 04106

JOB: U.S. ROUTE 4 E.B. OVER DORR DRIVE RUTLAND, VERMONT

CUSTOMER: MASKELL FENCE CO.
DESIGNER: STATE OF VERMONT, AGENCY OF TRANS.

REV. △			ORDER NO.	JOB NO.	DRAWING NO.	REV.
CHECKED	RH	12-21-84		4-46	52-5	△
DRAWN	DW	11-20-84				

HARLAN F. SPILLER CO. INC.

957-08