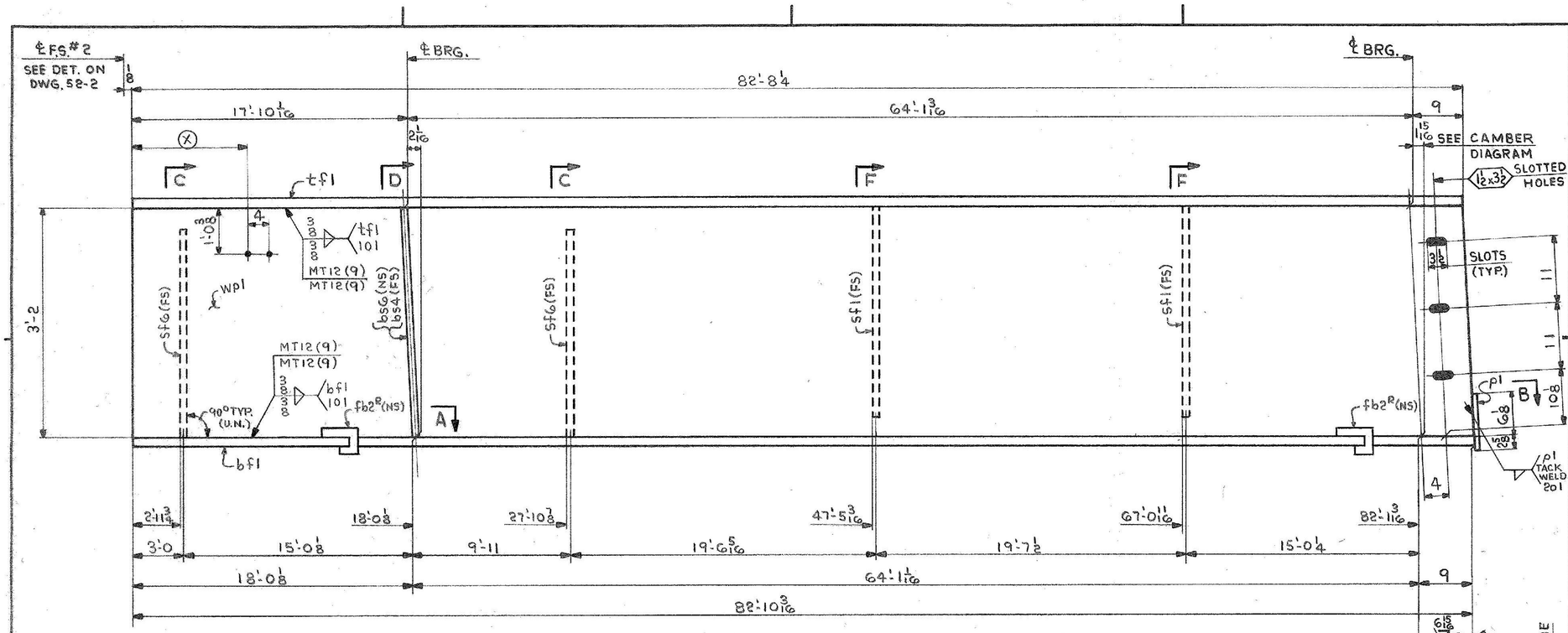

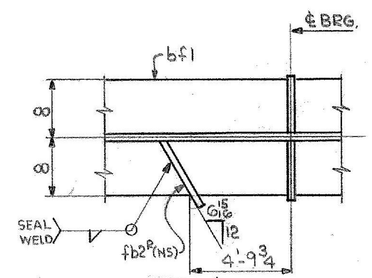

SECT.- A

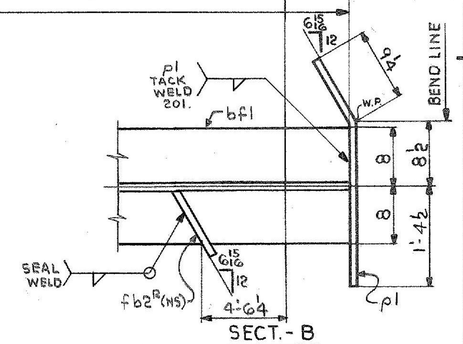

SECT.- B

ONE-GIRDER-G5C

FOR GIRDER STANDARD DETAILS SEE DWG. 52-2.
FOR WEB & FLG. PL CUTTING & ASSEMBLY SEE DWG. 52-1.

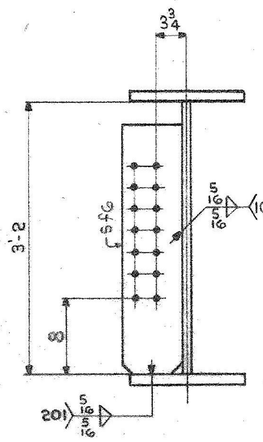

SECT.- C

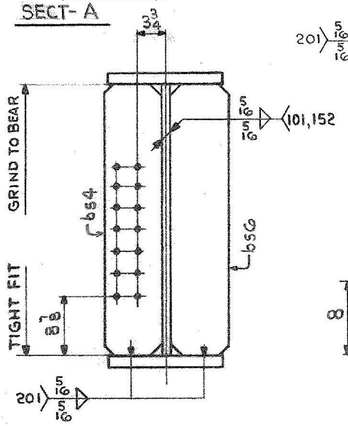

SECT.- D

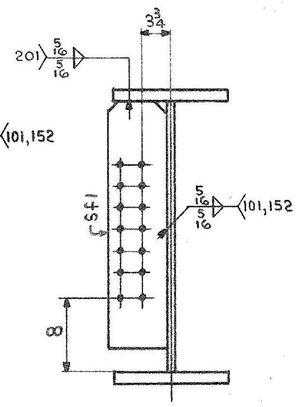

SECT.- F

DIM. (X)	
1'-4⅛	45'-4⅛
5'-4⅛	49'-4⅛
9'-4⅛	53'-4⅛
13'-4⅛	57'-4⅛
17'-4⅛	61'-4⅛
21'-4⅛	65'-4⅛
25'-4⅛	69'-4⅛
29'-4⅛	73'-4⅛
33'-4⅛	77'-4⅛
37'-4⅛	81'-4⅛
41'-4⅛	

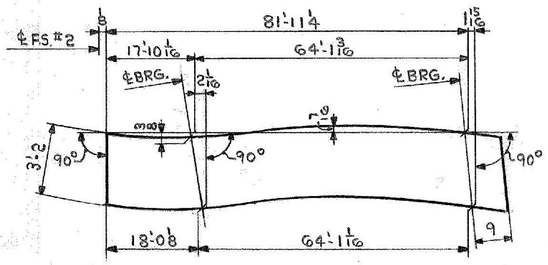

CAMBER DIAGRAM

SHIP	BILL OF MATERIAL					JOB NO. 4-45		DRAWING NO. 52-11	REV. △
MARK	NO.	MARK	SHAPE	LENGTH		WT.	ITEM NO.	WT	REMARKS
G5C	ONE		GIRDER						
	1	wp1	PL ½ x 38 13/16	82	10 3/16	16 39 1/2 x 5 31	1/C	5351	CVN
	1	tf1	PL 1 3/16 x 16	82	8¼	16 82 11	1/K	5346	CVN
	1	bf1	PL 1 3/16 x 16	82	10 3/16	16 83 1	1/L	5356	CVN
	1	bs4	PL ¾ x 8	3	2	1PL 20'0 P.O. 31755	2/A	65	
	1	bs6	PL ¾ x 8	3	2	PL50 4-46 1P	2/A	65	
	2	sf1	PL ½ x 8	2	11	2PL 21'0	2/B	79	
	2	sf6	PL ½ x 8	2	11	P.O. 30739 10-4-46	2/B	79	
	1	pl	PL ¼ x 8¾	2	10¼	2PL 72 x 20'0 P.O. 31755	2/I	21	BENT
	2	fb2R	PL ¼ x 3 3/16	0	10⅜	PL36 C075 2-23-4-49 4-9-46	2/H	5	
								16367	# SHIPPING WEIGHT
* PAY	WEIGHT								
	2		PL 1 3/16 x 16	12	0			1552	
	1		PL ⅜ x 16	70	8¼			3367	
	1		PL ⅜ x 16	70	10 5/16			3375	
								13959	# PAY WEIGHT

IT. NO. 506.91 | BR. NO. 5 | PROJ. NO. F-EGC-F-020-1(10)

FOR APPROVAL | **FOR FILES & FIELD**

STEEL: ASTM. [ ] A36 [ ] A572 GR. [X] A588 GR. [ ] Unless Noted
WELDING ELECTRODE: [ ] E70 [X] See Welding Proc. [ ] None
SHOP CONN: [ ] Bolted [X] Welded [ ] None
FIELD CONN: [X] Bolted [ ] Welded [ ] None
HOLES: [ ] 13/16 [X] 15/16 [ ] [X] Unless Noted [ ] None
PAINT: [X] None [ ] Shopcoat [ ] Galv. After Fab. [ ] As Noted
SPECIAL PAINT: NONE
SPECIAL CLEANING: [X] Blast Clean [ ] None SSPC-SP6

GIRDER-G5C

APPROVED: 2-1-85

PRINT DIST.		
7	12-27-84	APP.
8	2-6-85	FAB.
		F&F.
ORIG	3-26-86	VAT

Bancroft & Martin Inc.
South Portland, Maine 04106

JOB: U.S. ROUTE 4 W.B. OVER DORR DRIVE
RUTLAND, VERMONT

CUSTOMER: MASKELL FENCE CO.
DESIGNER: STATE OF VERMONT, AGENCY OF TRANS.

REV. △			ORDER NO.	JOB NO.	DRAWING NO.	REV.
CHECKED	RW	12-21-84		4-45	52-11	△
DRAWN	DW	11-20-84				

957-08

HARLAN E. SPILLER CO. INC.