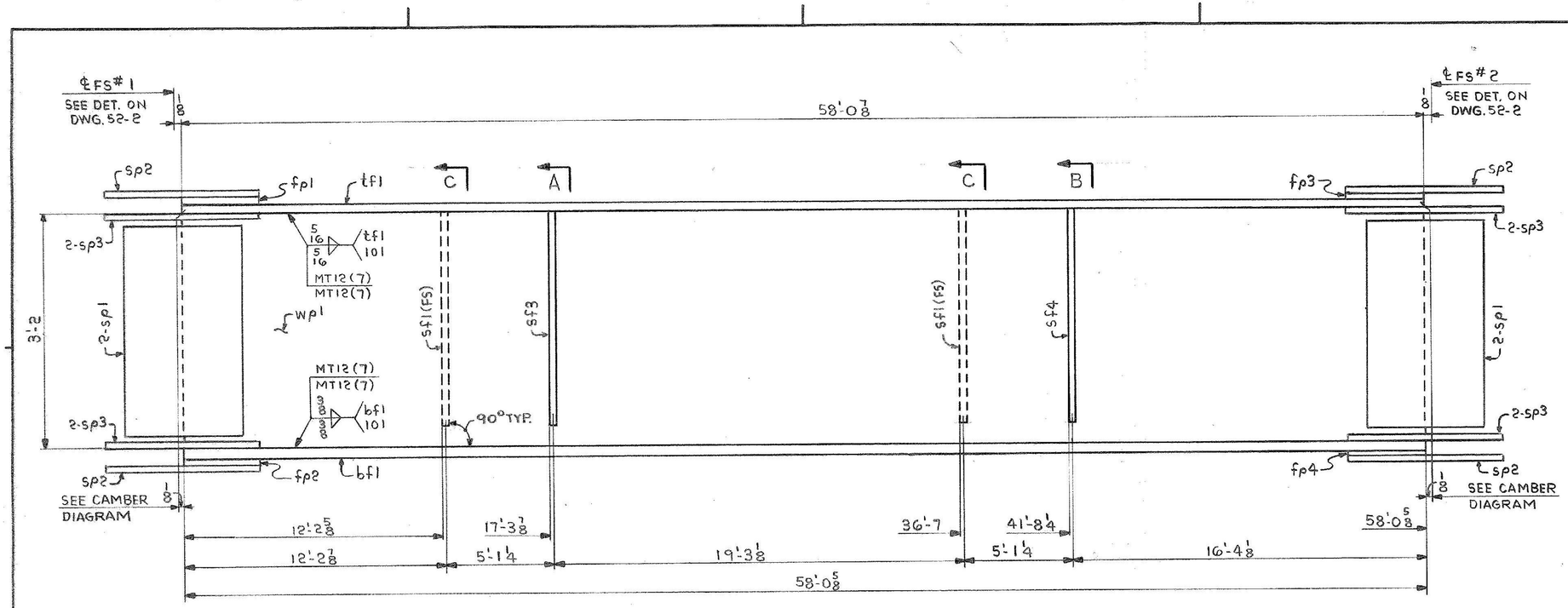

ONE-GIRDER-G2B
ONE-GIRDER-G3B
ONE-GIRDER-G4B
} ALIKE UNTIL REAMED

FOR GIRDER STANDARD DETAILS SEE DWG. 52-2.
FOR WEB & FLG. PL CUTTING & ASSEMBLY SEE DWG. 52-1.

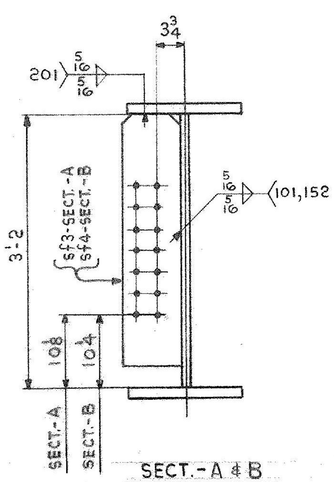

SECT.-A & B

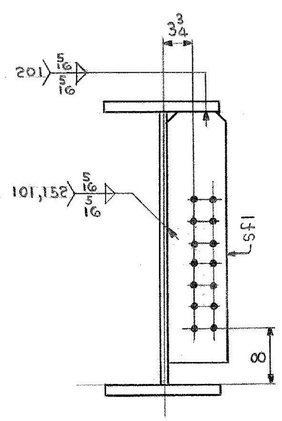

SECT.-C

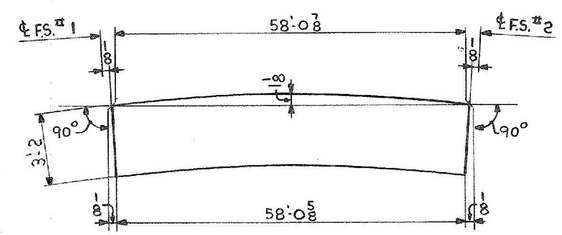

CAMBER DIAGRAM

SHIP	BILL OF MATERIAL					JOB NO. 4-45		DRAWING NO. 52-7	REV. △
MARK	NO.	MARK	SHAPE	LENGTH		WT.	ITEM NO.	WT	REMARKS
G2B	ONE		GIRDER						
G3B	ONE		GIRDER						
G4B	ONE		GIRDER						
	3	wp1	PL 1/2 x 39 1/8	58	0 7/8	3@ 4'-0 x 58'-4	1/B	11262	CVN P.O.
	3	tf1	PL 7/8 x 16	58	0 7/8	3@ 58'-3	1/I	8300	31733
	3	bf1	PL 1 1/16 x 16	58	0 5/8	3@ 58'-3	1/J	10074	CVN
	12	sp1	PL 3/8 x 36 1/2	1	7 1/2	3@ 3'-7 x 11'-7	1/N	908	CVN P.O. *
	12	sp2	PL 1/2 x 16	2	1 1/2	7@ 1'-10	1/O	694	CVN 31733 *
	24	sp3	PL 1/2 x 7	2	1 1/2	4@ 1'-9 x 10'-10	1/P	607	CVN *
	3	fp1	PL 3/4 x 16	1	0 5/8	18@ 1'-8 x 7'-0	1/Q	129	P.O. 31758 *
	3	fp2	PL 9/16 x 16	1	0 5/8	REF. 1@ 36 x 2'-8	1/R	97	*
	3	fp3	PL 5/16 x 16	1	0 5/8	1@ 2'-8 x 7'-0	1/S	54	P.O. 31758 *
	3	fp4	PL 1/8 x 16	1	0 5/8	1@ 4'-0 x 10'-0	1/T	21	*
	6	sf1	PL 1/2 x 8	2	11	2@ 8'-0	2/B	238	
	3	sf3	PL 1/2 x 8	2	11	P.O. 31739	2/B	119	
	3	sf4	PL 1/2 x 8	2	11	ALSO 1@ ON 4-46	2/B	119	
								32622#	SHIPPING WEIGHT
* PAY WEIGHT									
	12		PL 3/8 x 36	1	6 1/4			838	
	12		PL 1/2 x 16	2	0 1/4			660	
	24		PL 1/2 x 7	2	0 1/4			578	
								32188#	PAY WEIGHT

IT. NO. 506.91 | BR. NO. 5 | PROJ. NO. F-EGC-F-020-1(10)

FOR APPROVAL | **FOR FILES & FIELD**

STEEL: ASTM. [ ] A36 [ ] A572 GR. [X] A588 GR. [ ] Unless Noted [ ]
WELDING ELECTRODE: [ ] E70 [X] See Welding Proc. [ ] None [ ]
SHOP CONN: [ ] Bolted [X] Welded [ ] None
FIELD CONN: [X] Bolted [ ] Welded [ ] None
HOLES: [ ] 13/16 [X] 15/16 [ ] [X] Unless Noted [ ] None
PAINT: [X] None [ ] Shopcoat [ ] Galv. After Fab. [ ] As Noted
SPECIAL PAINT: NONE
SPECIAL CLEANING: [X] Blast Clean [ ] None SSPC-SP6

GIRDERS-G2B, G3B & G4B

APPROVED: 2-1-85		
PRINT DIST.		
7	12-27-84	APP.
8	2-6-85	FAB.
		F&F.
ORIG	3-26-86	VAT
REV. △		
CHECKED	RW	12-21-84
DRAWN	DW	11-17-84

Bancroft & Martin Inc.
South Portland, Maine 04106

JOB: U.S. ROUTE 4 W.B. OVER DORR DRIVE
RUTLAND, VERMONT

CUSTOMER: MASKELL FENCE CO.
DESIGNER: STATE OF VERMONT, AGENCY OF TRANS.

ORDER NO.	JOB NO.	DRAWING NO.	REV.
	4-45	52-7	△

957-08