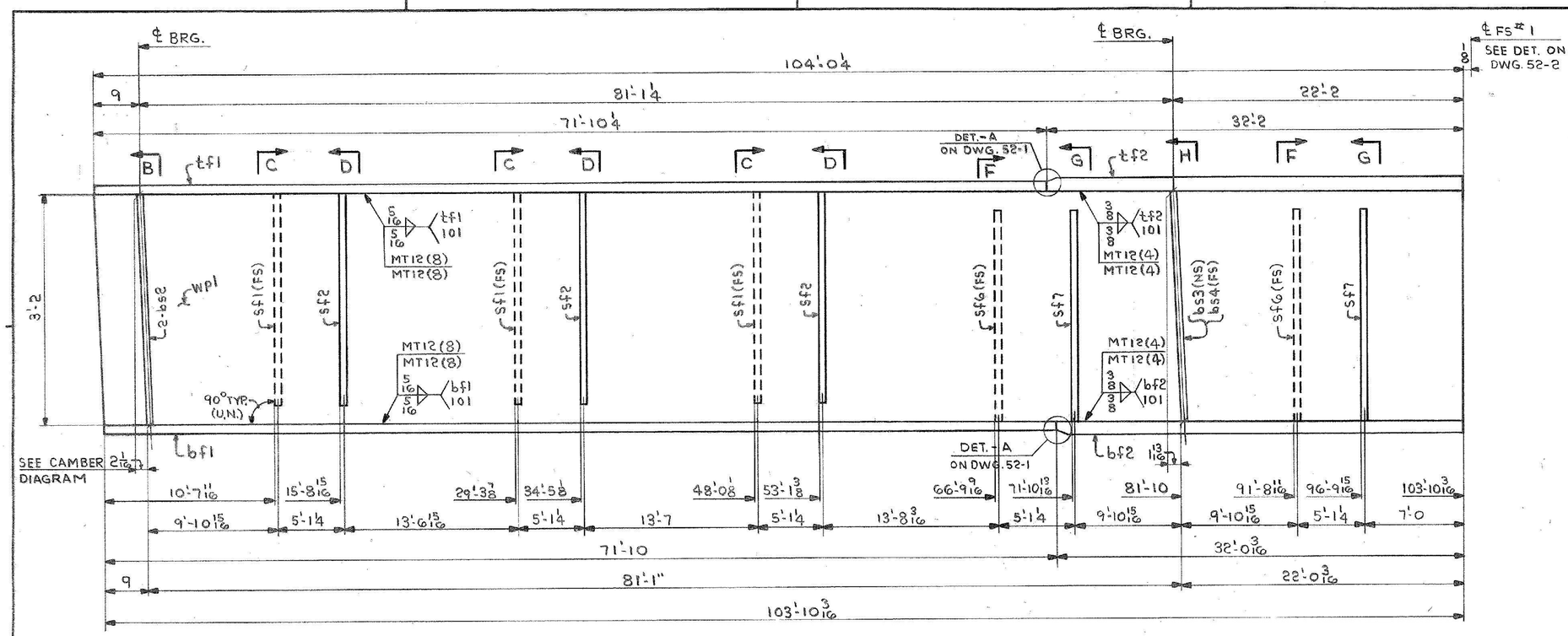

ONE-GIRDER-G2A
ONE-GIRDER-G3A
ONE-GIRDER-G4A
} ALIKE UNTIL REAMED

FOR GIRDER STANDARD DETAILS SEE DWG. 52-2.
FOR WEB & FLG. # CUTTING & ASSEMBLY SEE DWG. 52-1.

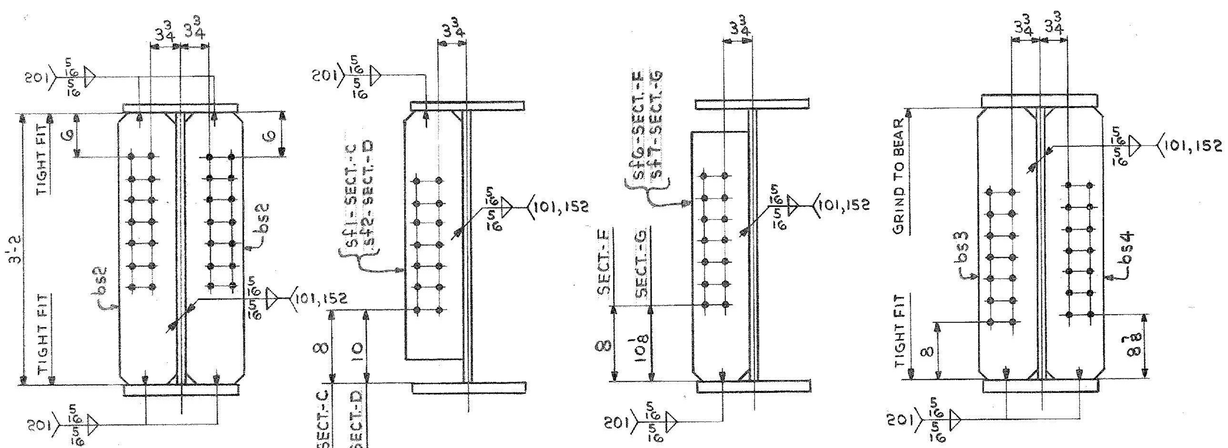

SECT.-B SECT.-C & D SECT.-F & G SECT.-H

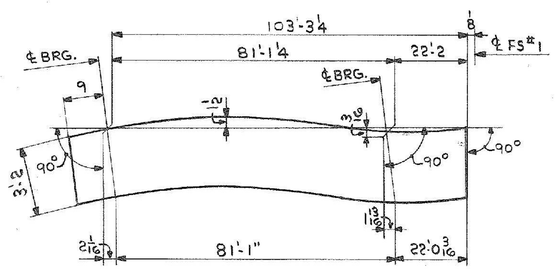

CAMBER DIAGRAM

SHIP MARK	NO.	MARK	SHAPE	LENGTH		~~WT.~~	ITEM NO.	WT	REMARKS
G2A	ONE		GIRDER						
G3A	ONE		GIRDER						
G4A	ONE		GIRDER						
	3	WP1	PL ½ x 39¾	104	0¼	3@40 1/2 x 104'-2	1/A	20159	CVN
	3	tf1	PL ⅞ x 16	71	10¼	3@72'-1	1/E	10269	P.O.
	3	tf2	PL 1⅝ x 16	32	2	3@32'-4	1/F	8598	CVN 31933 *
	3	bf1	PL 1" x 16	71	10	3@72'-1	1/G	11733	CVN
	3	bf2	PL 1⅝ x 16	32	0 3/16	3@32'-3	1/H	8497	*
	6	bs2	PL ¾ x 8	3	2	12@2'-0 Fd. 31955	2/A	388	
	3	bs3	PL ¾ x 8	3	2	Also Cuts	2/A	194	
	3	bs4	PL ¾ x 8	3	2	3@4'-4 Fdm 1P	2/A	194	
	9	sf1	PL ½ x 8	2	11	23@2'-10 Fd. 31939	2/B	357	
	9	sf2	PL ½ x 8	2	11	Also Cuts	2/B	357	
	6	sf6	PL ½ x 8	2	11	3@4'-4	2/B	238	
	6	sf7	PL ½ x 8	2	11	3 from 1G	2/B	238	
								61162	SHIPPING WEIGHT
* PAY WEIGHT									
	6		PL 1⅝ x 16	20	0			10617	
	3		PL ⅞ x 16	12	2			1739	
	3		PL 1 1/16 x 16	12	0 3/16			2085	
								~~58568~~	PAY WEIGHT

IT. NO. 506.91 | BR. NO. 5 | PROJ. NO. F-EGC-F-020-1(10)

FOR APPROVAL | **FOR FILES & FIELD**

STEEL: ASTM. [ ] A36 [ ] A572 GR. [X] A588 GR. [ ] Unless Noted
WELDING ELECTRODE: [ ] E70 [X] See Welding Proc. [ ] None
SHOP CONN: [ ] Bolted [X] Welded [ ] None
FIELD CONN: [X] Bolted [ ] Welded [ ] None
HOLES: [ ] 13/16 [X] 15/16 [ ] [X] Unless Noted [ ] None
PAINT: [X] None [ ] Shopcoat [ ] Galv. After Fab. [ ] As Noted
SPECIAL PAINT: NONE
SPECIAL CLEANING: [X] Blast Clean [ ] None SSPC-SP6

GIRDERS-G2A, G3A & G4A

APPROVED: 2-1-85

PRINT DIST.		
7	12-27-84	APP.
8	2-6-85	FAB.
		F&F.
ORIG	3-26-86	VAT

Bancroft & Martin Inc.
South Portland, Maine 04106

JOB: U.S. ROUTE 4 W.B. OVER DORR DRIVE
RUTLAND, VERMONT

CUSTOMER: MASKELL FENCE CO.
DESIGNER: STATE OF VERMONT, AGENCY OF TRANS.

REV. △			ORDER NO.	JOB NO.	DRAWING NO.	REV.
CHECKED	RW	12-21-84		4-45	52-4	△
DRAWN	DW	11-16-84				

957-08