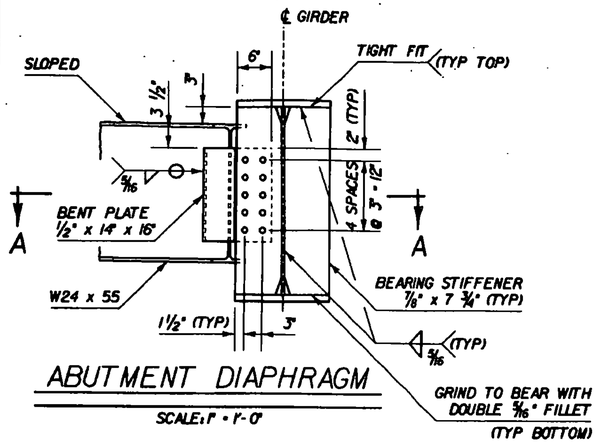

ABUTMENT DIAPHRAGM

SCALE: 1" = 1'-0"

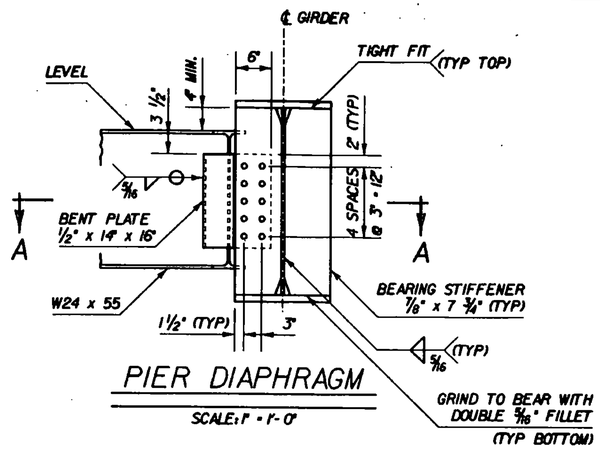

PIER DIAPHRAGM

SCALE: 1" = 1'-0"

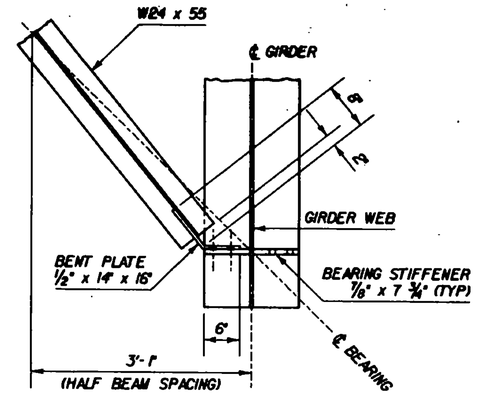

SECTION A-A

SCALE: 1" = 1'-0"

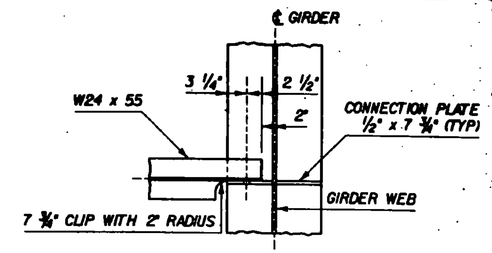

SECTION B-B

SCALE: 1" = 1'-0"

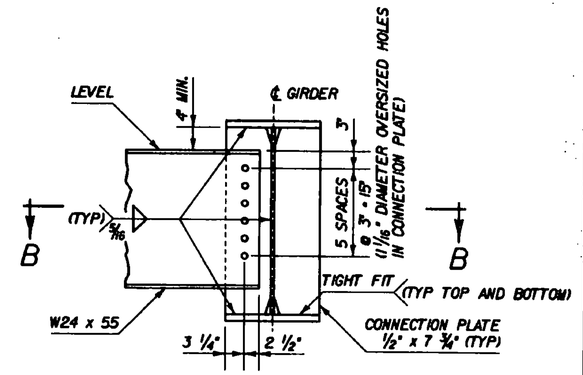

INTERMEDIATE DIAPHRAGM

SCALE: 1" = 1'-0"

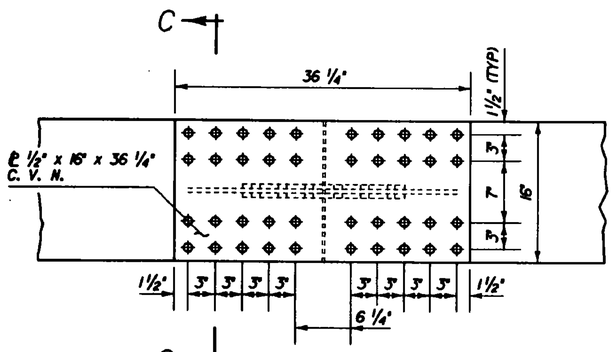

PLAN

SCALE: 1 1/2" = 1'-0"

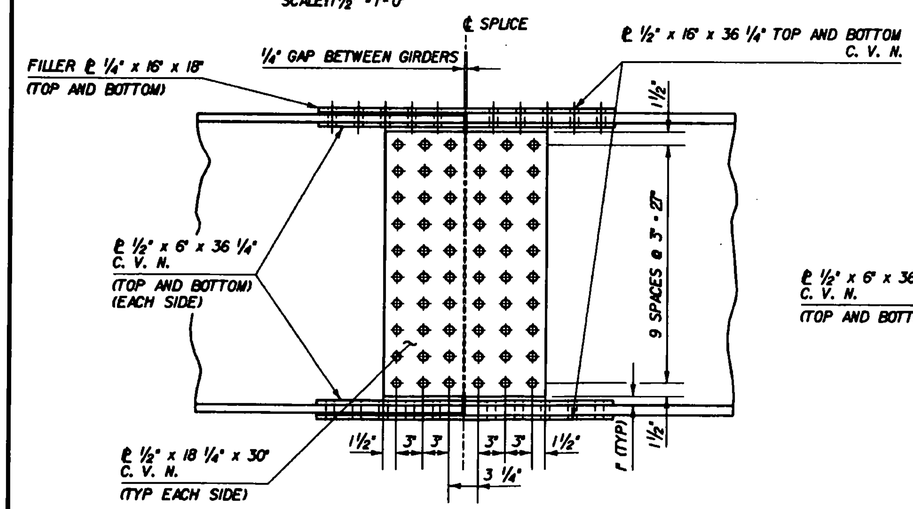

ELEVATION

SCALE: 1 1/2" = 1'-0"

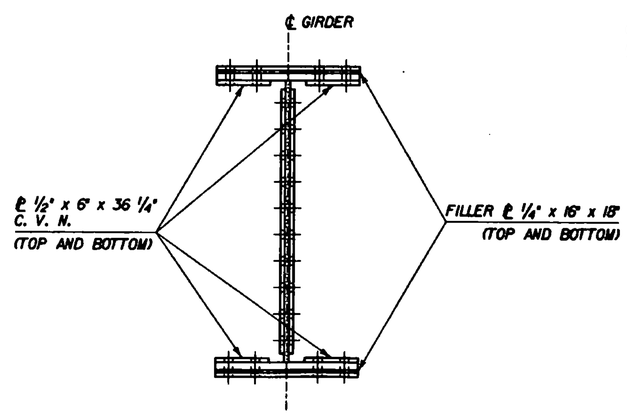

SECTION C-C

SCALE: 1 1/2" = 1'-0"

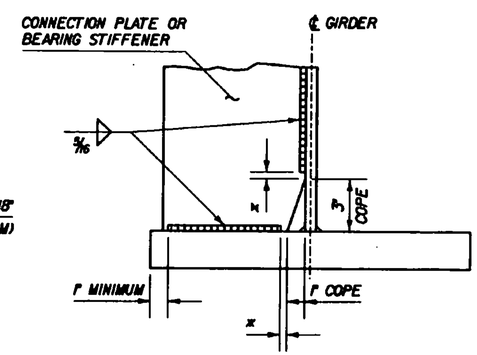

WELD TERMINATION AND COPING DETAIL

NOT TO SCALE

x NO WELD FOR 1/4" MINIMUM OR 1/2" MAXIMUM (EXCEPT - MUST MAINTAIN r MINIMUM DISTANCE FROM THE EDGE OF THE FLANGE

STATE OF VERMONT
AGENCY OF TRANSPORTATION

Town Of NORWICH		Bridge No. 81	
Highway No. U. S. ROUTE 5		Log Sta. 345+47	
		Surv. Sta. 345+47	
DIAPHRAGM AND SPLICE DETAILS			
U. S. ROUTE 5 OVER THE OMPOMPANOOSUC RIVER			
Designed By D. J. HOYNE		Drawn By K. S. CLAIRMONT	
Checked By D. J. HOYNE	Date 2/92	Bridge Design Supervisor F.W. Bolkum	Date 4/92
PROJECT NORWICH		PROJECT NO. BHS 0113(36)	
L.G.C. Info.	ZHh[30,47] 77B069DSD.DGN;1		
Bridge Sheet No. BR106		Sheet 22 of 70	