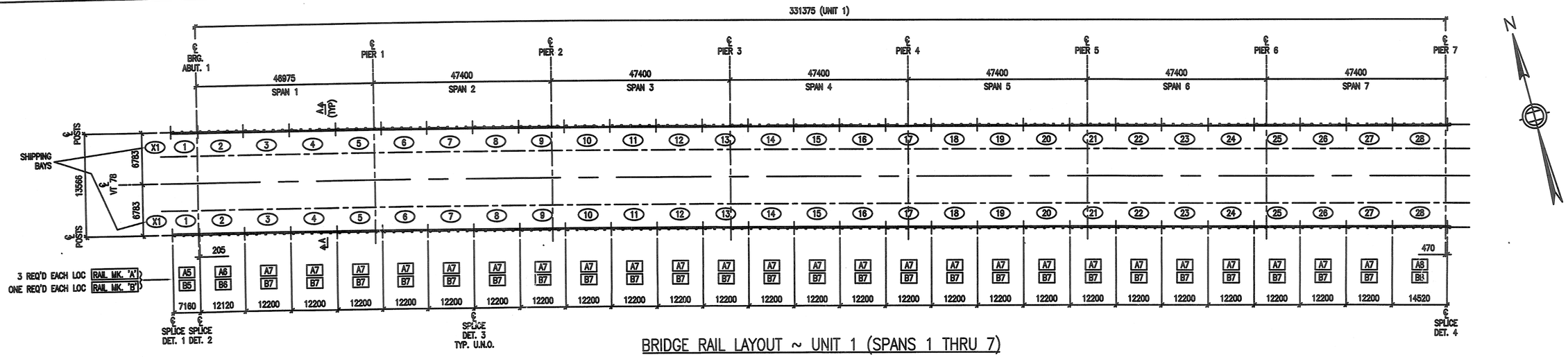

BRIDGE RAIL LAYOUT ~ UNIT 1 (SPANS 1 THRU 7)

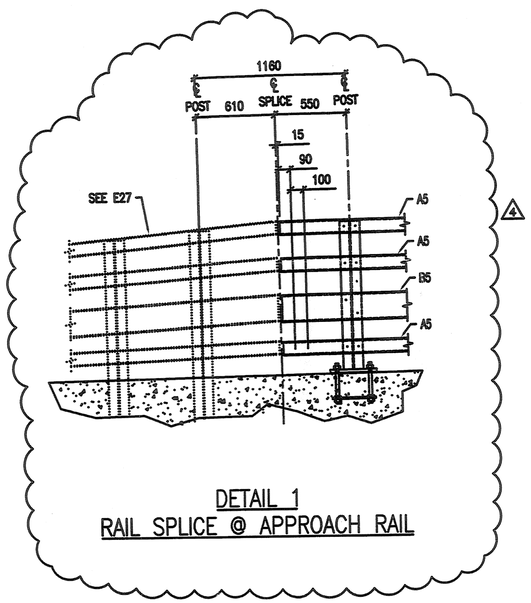

DETAIL 1
RAIL SPLICE @ APPROACH RAIL

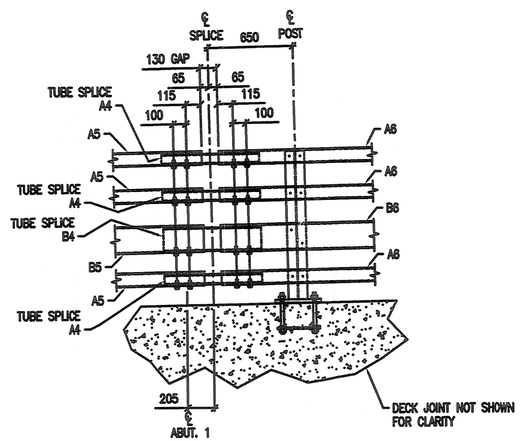

DETAIL 2
RAIL SPLICE @ ABUTMENT 1

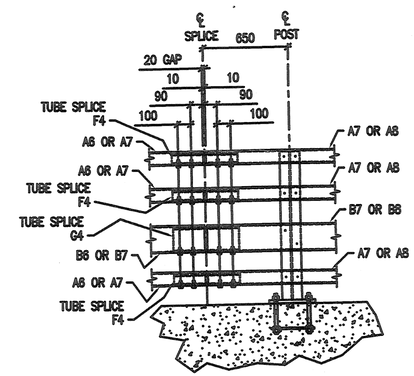

DETAIL 3
TYPICAL RAIL SPLICE

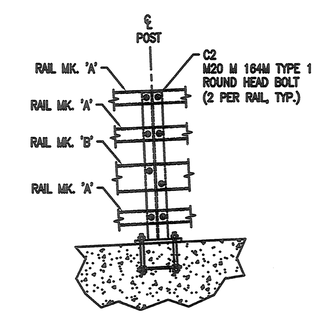

TYPICAL RAIL TO POST CONNECTION

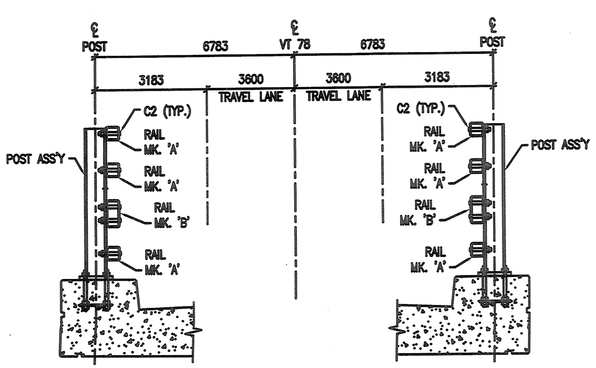

SECTION A–A

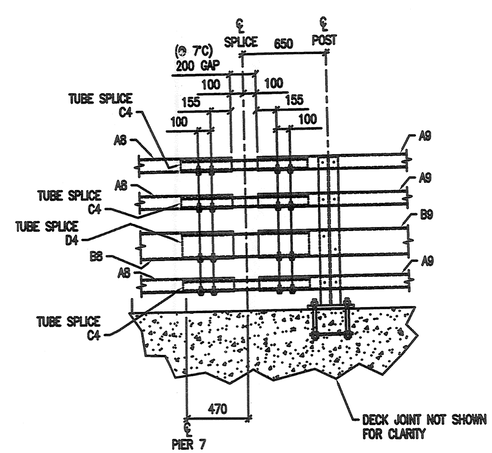

DETAIL 4
RAIL SPLICE @ PIER 7

SHOP DRAWING REVIEW

☐ REVIEWED AS REQUIRED BY THE CONSTRUCTION CONTRACT DOCUMENTS AND APPROVED, BUT ONLY FOR CONFORMANCE TO THE DESIGN CONCEPT OF THE WORK, AND SUBJECT TO FURTHER LIMITATIONS AND REQUIREMENTS CONTAINED IN THE CONSTRUCTION CONTRACT DOCUMENTS.
☐ REJECTED ☐ REVISE AND RESUBMIT ☑ FURNISH AS CORRECTED

CORRECTIONS OR COMMENTS MADE ON THE SHOP DRAWINGS DURING THIS REVIEW DO NOT RELIEVE CONTRACTOR FROM COMPLIANCE WITH REQUIREMENTS OF THE DRAWINGS AND SPECIFICATIONS. THIS CHECK IS ONLY FOR REVIEW OF GENERAL CONFORMANCE WITH THE DESIGN CONCEPT OF THE PROJECT AND GENERAL COMPLIANCE WITH THE INFORMATION GIVEN IN THE CONTRACT DOCUMENTS. THE CONTRACTOR IS RESPONSIBLE FOR: CONFIRMING AND CORRELATING ALL QUANTITIES AND DIMENSIONS; SELECTING FABRICATION PROCESSES AND TECHNIQUES OF CONSTRUCTION; COORDINATING HIS WORK WITH THAT OF ALL OTHER TRADES; AND PERFORMING HIS WORK IN A SAFE AND SATISFACTORY MANNER.

VHB Vanasse Hangen Brustlin, Inc. Engineers, Planners, and Scientists 5Ш Bedford Farms, Kilton Rd. Bedford, NH 03110 603 644 0888
Job Number: 54911
Reviewed By: SMN
Date: 8-15-06

NOTES:

1. WORK THIS DRAWING WITH E25 AND E26.

MAT'L : SEE GN-1	FIELD BOLTS			
HOLES : 22ø (7/8") U.N.O.	GRADE: A325			
WELD :				
ELECTRODE : E70XX				
PREP : SEE GN-1				
PAINT : SEE GN-1				

REV.	DATE	BY	DESCRIPTION	CHK
5	07/15/06	MN	REV'D PER APP	RC
4	08/03/06	MN	REV'D PER CIANBRO RFI 008	RC
3	13/02/06	RC	SHIPPING BAYS ADDED	BH

WORK: NETC 4 RAIL–BRIDGE RAILING
VT. ROUTE 78 OVER MISSISQUOI BAY
ALBURG – SWANTON, VERMONT

DRAWING: BRIDGE RAIL LAYOUT – UNIT 1 (SPANS 1 THRU 7)

SCALE: N.T.S.
SUPERVISOR: T.S.
DRAWN: JM
CHECK: BH

CIANBRO CORPORATION PITTSFIELD MAINE

SHEET E24
JOB 050004