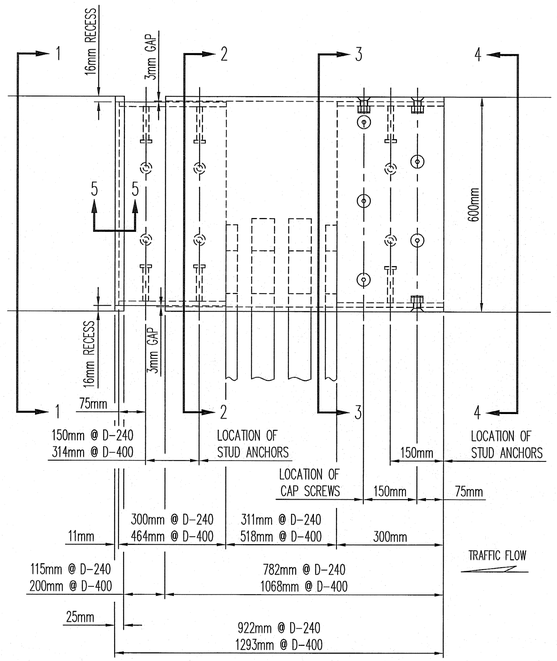

RH COVER PLATE PLAN VIEW

RH COVER PLATE ASSEMBLIES 1RH & 2RH
LOCATED AT ABUTMENT NOS. 1 & 2 (D-240)
PIERS 7 & 15 (D-400)
DIMENSIONS SHOWN ARE AT MID. TEMP. (7°C)

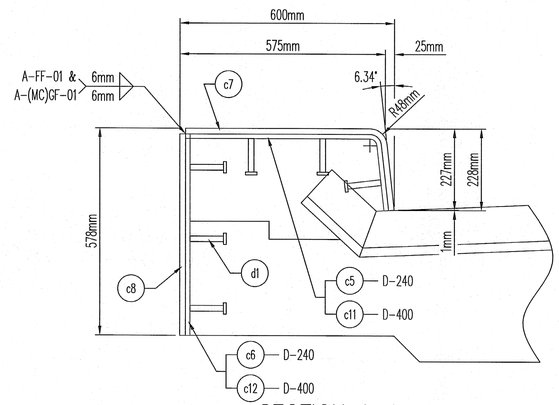

SECTION 1-1

THRU BUTT PLATE & SLIDE PLATE
OVERALL DIMENSIONS TO BUTT PLATE

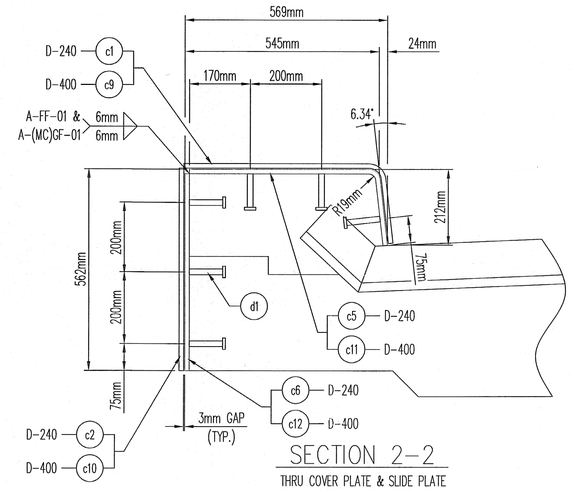

SECTION 2-2

THRU COVER PLATE & SLIDE PLATE
OVERALL DIMENSIONS TO SLIDE PLATE

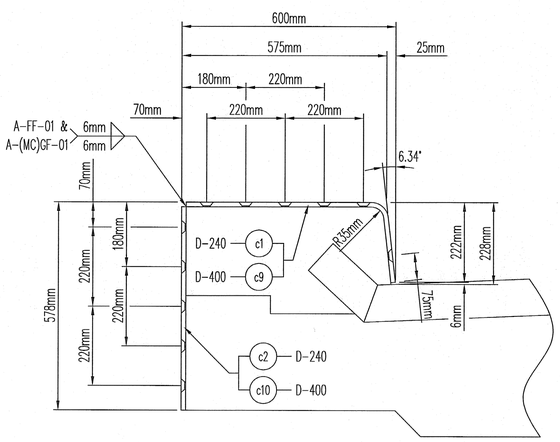

SECTION 3-3

THRU COVER PLATE

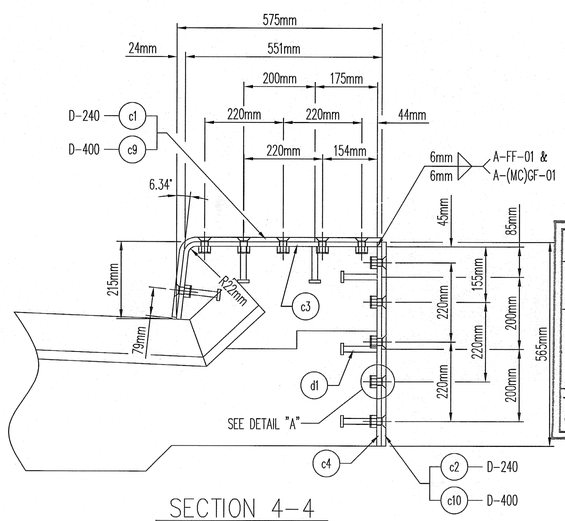

SECTION 4-4

THRU COVER PLATE & ANCHOR PLATE
OVERALL DIMENSIONS TO ANCHOR PLATE

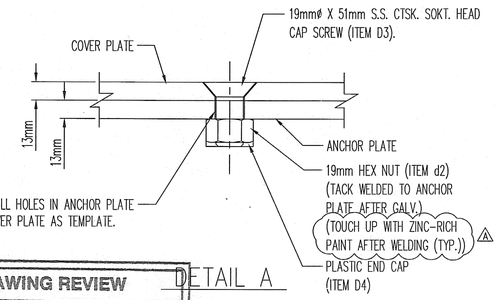

DETAIL A

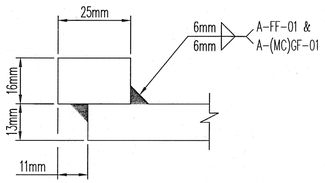

SECTION 5-5

SHOP DRAWING REVIEW

☐ REVIEWED AS REQUIRED BY THE CONSTRUCTION CONTRACT DOCUMENTS AND APPROVED, BUT ONLY FOR CONFORMANCE TO THE DESIGN CONCEPT OF THE WORK, AND SUBJECT TO FURTHER LIMITATIONS AND REQUIREMENTS CONTAINED IN THE CONSTRUCTION CONTRACT DOCUMENTS.

☐ REJECTED ☐ REVISE AND RESUBMIT ☒ FURNISH AS CORRECTED

CORRECTIONS OR COMMENTS MADE ON THE SHOP DRAWINGS DURING THIS REVIEW DO NOT RELIEVE CONTRACTOR FROM COMPLIANCE WITH REQUIREMENTS OF THE DRAWINGS AND SPECIFICATIONS. THIS CHECK IS ONLY FOR REVIEW OF GENERAL CONFORMANCE WITH THE DESIGN CONCEPT OF THE PROJECT AND GENERAL COMPLIANCE WITH THE INFORMATION GIVEN IN THE CONTRACT DOCUMENTS. THE CONTRACTOR IS RESPONSIBLE FOR: CONFIRMING AND CORRELATING ALL QUANTITIES AND DIMENSIONS; SELECTING FABRICATION PROCESSES AND TECHNIQUES OF CONSTRUCTION; COORDINATING HIS WORK WITH THAT OF ALL OTHER TRADES; AND PERFORMING HIS WORK IN A SAFE AND SATISFACTORY MANNER.

VHB Vanasse Hangen Brustlin, Inc. Engineers, Planners, and Scientists Six Bedford Farms, Kiton Rd. Bedford, NH 03110 603 644 0888

Job Number: 50411
Reviewed By: SMH
Date: 6/1/06

D.S. BROWN
300 E. CHERRY STREET
NORTH BALTIMORE, OHIO 45872
419.257.3561
FAX: 419.257.0332

4201 NOREX DRIVE
CHASKA, MINNESOTA 55318
952.368.3000
FAX: 952.448.7000

DSBROWN.COM

REV.	DESCRIPTION	DATE	DET.	CKD.
A	ADDED NOTE TO DETAIL A; MODIFIED ITEMS IN TITLE BLOCK	04/02/06	RES	JLW

LOCATION — VT 78 OVER MISSISQUOI BAY
BRIDGE — 2
PROJECT NO. — BRF 036-1 (1)
A TOWN — ALBURG AND SWANTON
P.O. NO. — P078559 MIS
A SUPERVISOR — MARK KACZINSKI
CUSTOMER — CIANBRO CORPORATION

ITEM	QUANTITY
–	–
–	–
–	–
–	–
–	–
–	–
–	–
–	–
–	–

DESCRIPTION: COVER PLATE DETAILS
COUNTIES OF GRAND ISLE AND FRANKLIN, VERMONT

SCALE:	DRAWN BY:	CHECKED BY:	DATE:	BRIDGE SHEET:
N.T.S.	RES	JLW	03-04-05	14 OF 15

PROJECT NUMBER	PRODUCT CODE	RELEASE	SHEET
12244	1021	1	14