METRIC

1. ALL DIMENSIONS ARE IN MILLIMETERS UNLESS OTHERWISE NOTED.
2. ALL WEIGHTS ARE IN KILOGRAMS.

FED. ROAD DIV. NO.	STATE	FED. AID PROJ. NO.
	VT	

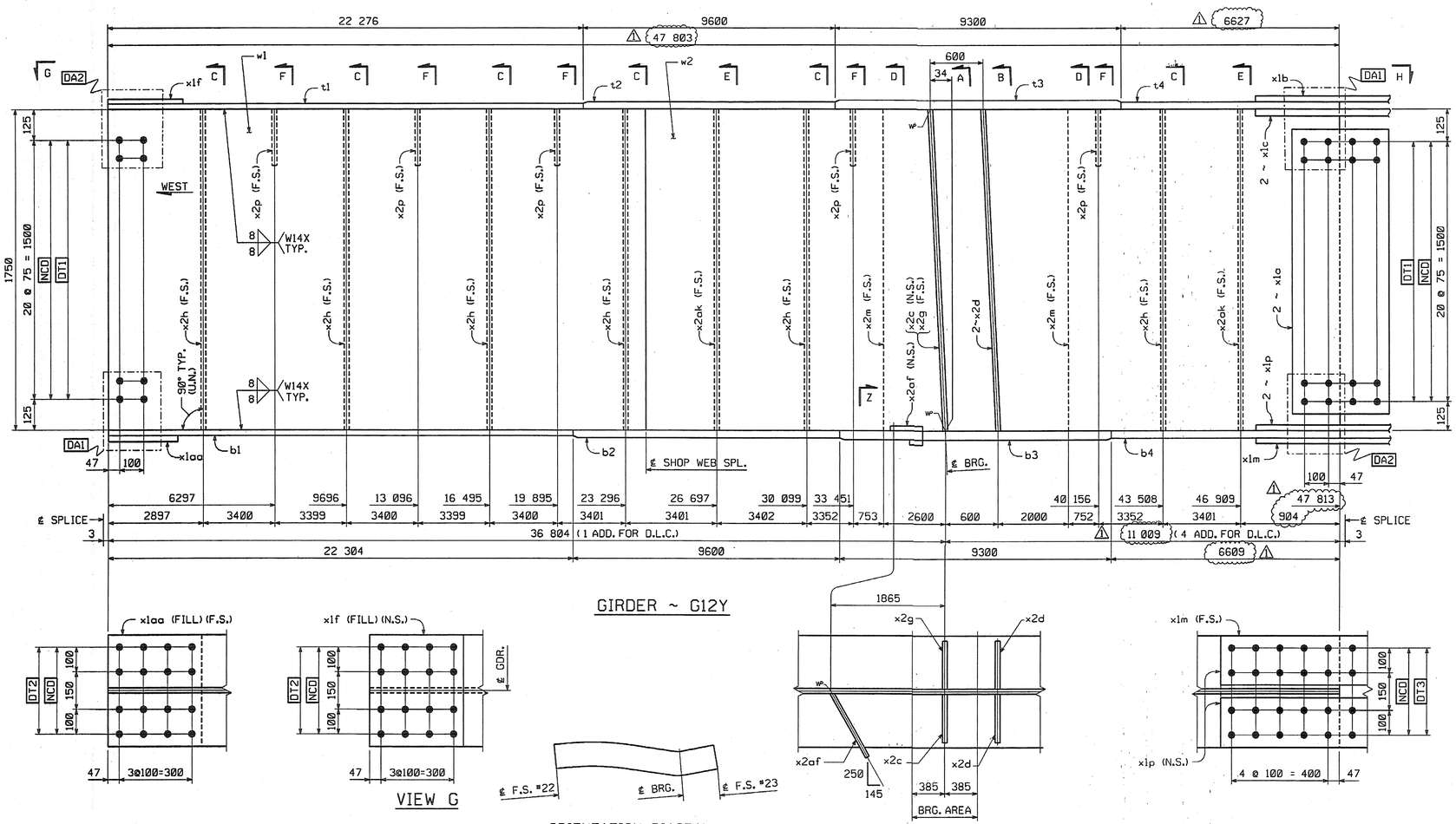

GIRDER ~ G12Y

BILL OF MATERIAL

NO.	MARK	DESCRIPTION	LENGTH	REMARKS	GRP.	ITEM	SHIP. WT. KG. EA.
ONE	G12Y	GIRDER					24 920
~~1~~	~~w1~~	~~PL 16 x 1750~~	~~23 812~~	~~(T)~~	~~3~~	~~6~~	~~5233.28~~
1	w2	PL 16 x 1750	~~24 010~~	(T) 47808	3	1	~~5276.79~~
1	t1	PL 22 x 450	22 276	(T)	4	25	~~1730.98~~
1	t2	PL 40 x 450	9 600	(T)	4	8	~~1356.32~~
1	t3	PL 80 x 450	9 300	(T)	4	1	~~2627.88~~
1	t4	PL 40 x 450	6 628	(T) 6617	4	10	~~936.43~~
1	b1	PL 22 x 450	22 304	(T)	4	23	~~1733.16~~
1	b2	PL 40 x 450	9 600	(T)	4	8	~~1356.32~~
1	b3	PL 80 x 450	9 300	(T)	4	1	~~2627.88~~
1	b4	PL 40 x 450	6 610	(T) 6607	4	11	~~933.89~~
2	x1a	PL 12 x 1600	400	(T)	6	1	~~60.28~~
1	x1b	PL 14 x 450	790	(T)	6	6	~~39.06~~
2	x1c	PL 16 x 200	790	(T)	6	5	~~19.84~~
1	x1f	PL 10 x 450	392	FILL	6	7	13.85
1	x1m	PL 18 x 450	990	(T)	6	3	~~62.94~~
2	x1p	PL 20 x 200	990	(T)	6	2	~~31.08~~
1	x1aa	PL 10 x 450	392	FILL	6	7	13.85
1	x2c	PL 38 x 200	1 750		7	1	~~104.39~~
2	x2d	PL 38 x 200	1 750		7	1	~~104.39~~
1	x2g	PL 38 x 200	1 750		7	1	~~104.39~~
6	x2h	PL 12 x 180	1 750		7	4	~~29.67~~
2	x2m	PL 12 x 180	1 750		7	4	~~29.67~~
5	x2p	PL 14 x 180	310		7	3	~~6.13~~
1	x2af	PL 6 x ~~130~~	301	V_{OL}=84.60cm³	7	5	~~1.84~~
2	x2ak	PL 12 x 180	1 750		7	4	~~29.67~~
TOTAL WEIGHT THIS SHEET:			~~24 911.81~~	kgs			

10508.20
17311.18
1356.48
2628.18
936.40
1733.36
1356.48
2628.18
933.85
120.58
39.07
39.69
62.95
62.17
104.41
208.81
104.41
179.~~41~~ 104
59.35
32.66
0.66
59.35

24910.93 kg
24910.16 kg
JMR 8-17-06
JMR 8-22-06

VIEW G

ORIENTATION DIAGRAM

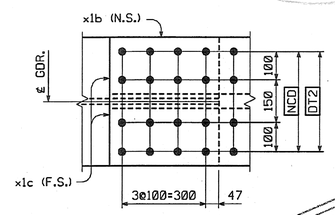

VIEW H

SHOP NOTE

HOLES: NONE
BOLTS: NONE
PAINT: NONE
FOR GENERAL SHOP NOTES, SEE DWG. GN1.
FOR WEB CAMBER DIAGRAM, SEE DWG. WC4.

SHOP DRAWING REVIEW
As noted
Revise and Resubmit
Rejected
As required by the construction contract documents and approved, but compliance with the design concept of the work and compliance to the construction contract documents is not verified.
Review as noted. This check is only for the shop drawings under this review. Other shop drawings and details shown on shop drawings may not have been reviewed. Review of the present shop drawings does not relieve the contractor from compliance with contract requirements, dimensions, quantities, materials, fabrication processes and techniques of construction, and coordination of the work with all other trades.
Review of shop drawings does not authorize deviations from contract requirements unless approved in writing by the Engineer.
Vermont Agency of Transportation
Bridge Program
Bridge: 194 Date: 828 844 4808
Job Number: 5584
Reviewed By: MH
Date: 9/20/04
VTrans

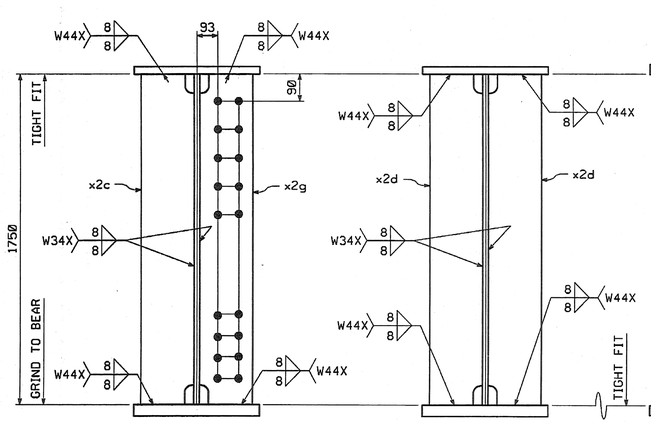

SECTION A
SECTION B
SECTION C
SECTION D
SECTION E
SECTION F

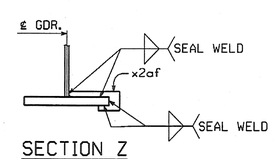

SECTION Z

NO.	REVISION	BY	DATE
1	INCREASE LENGTHS TO SATISFY REQUIREMENTS FOR LENGTH @ MEAN TEMPERATURE OF 45°F.	DP	9/20/04

HIGH STEEL STRUCTURES, INC.
1770 Hempstead Road
Lancaster, PA 17605-0008
Phone 717/299-5211
A Division of High Industries, Inc.

GIRDER G12Y
VT 78 OVER MISSISQUOI BAY, BRIDGE NO. 2
VT 78 STA.10+970.425 TO STA.12+059.775
TOWNS OF ALBURG AND SWANTON
COUNTIES OF GRAND ISLE AND FRANKLIN
STATE OF VERMONT, AGENCY OF TRANSPORTATION

STATE CONTRACT OR REF. NO. BRF-036-1(1)
CONTRACTOR CIANBRO CORPORATION
IN CHARGE: GLIDDEN (IH) MADE BY: SSL CHK'D. BY: CG DATE: 8-25-04
CONTRACT NUMBER: VT-04057-3 DRAWING NUMBER: 100 OF 112

CODE:30

METRIC
BY: dpaunter
PLOTTED: 9/20/2004 10:05:34 PM