METRIC

METRIC	1. ALL DIMENSIONS ARE IN MILLIMETERS UNLESS OTHERWISE NOTED. 2. ALL WEIGHTS ARE IN KILOGRAMS.	FED. ROAD DIV. NO.	STATE	FED. AID PROJ. NO.
			VT	

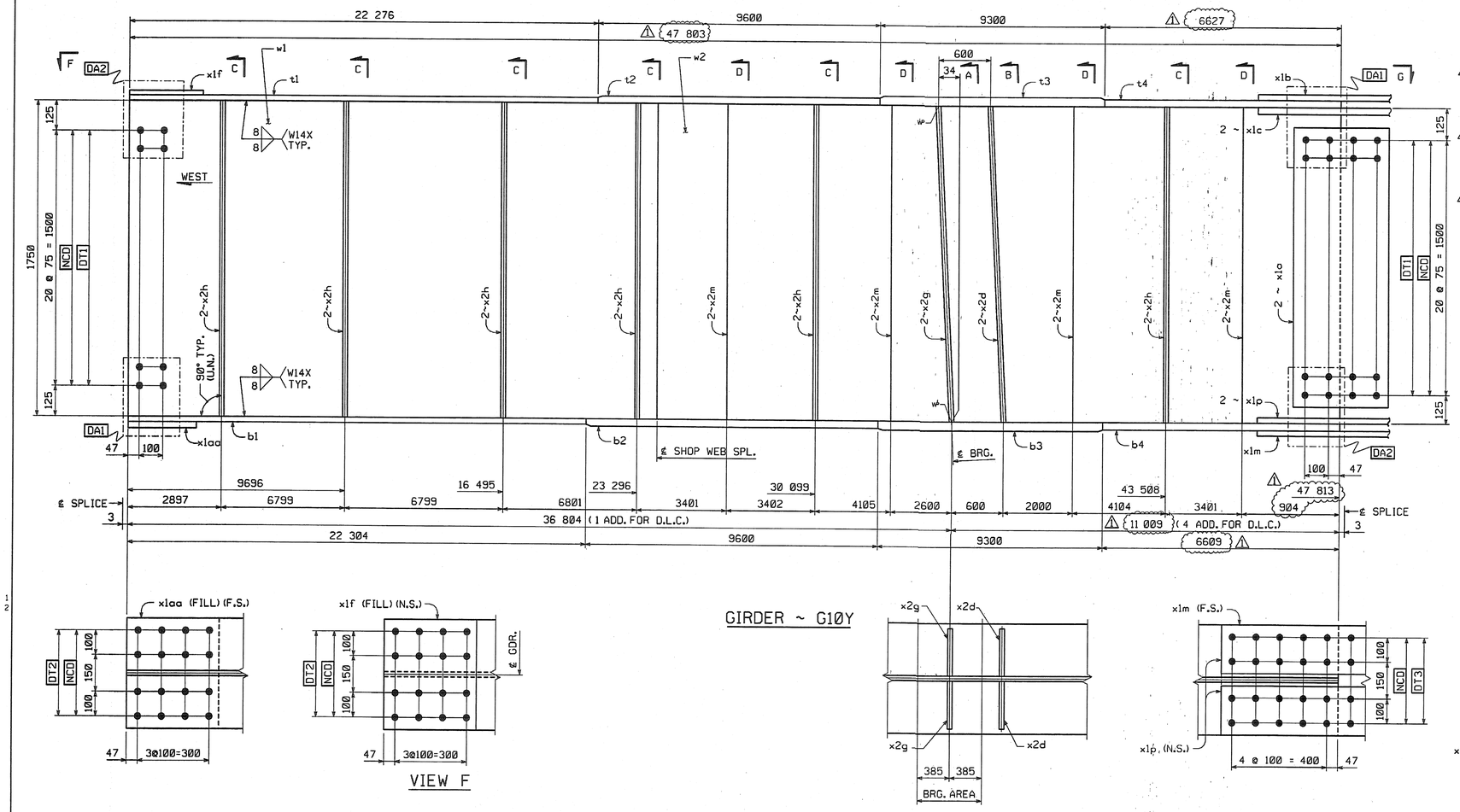

BILL OF MATERIAL

NO.	MARK	DESCRIPTION	LENGTH	REMARKS	GRP.	ITEM	SHIP. WT. KG. EA.	
ONE	G10Y	GIRDER					25 180	
~~1~~	~~w1~~	~~PL 16 x 1750~~	~~23 812~~	~~(T)~~	~~3~~	~~6~~	~~5233.28~~	
1	w2	PL 16 x 1750	~~24 010~~	(T) 47808	3	1	~~5276.79~~	10508.20
1	t1	PL 22 x 450	22 276	(T)	4	25	~~1730.98~~	1731.18
1	t2	PL 40 x 450	9 600	(T)	4	8	~~1356.32~~	1356.48
1	t3	PL 80 x 450	9 300	(T)	4	1	~~2627.88~~	2628.18
1	t4	PL 40 x 450	6 628	(T) 6627	4	10	~~936.43~~	936.40
1	b1	PL 22 x 450	22 304	(T)	4	23	~~1733.16~~	1733.36
1	b2	PL 40 x 450	9 600	(T)	4	8	~~1356.32~~	1356.48
1	b3	PL 80 x 450	9 300	(T)	4	1	~~2627.88~~	2628.18
1	b4	PL 40 x 450	6 610	(T) 6609	4	11	~~933.89~~	933.85
2	x1a	PL 12 x 1600	400	(T)	6	1	~~60.28~~	120.58
1	x1b	PL 14 x 450	790	(T)	6	6	~~39.06~~	39.07
2	x1c	PL 16 x 200	790	(T)	6	5	~~19.84~~	39.69
1	x1f	PL 10 x 450	392	FILL	6	7	13.85	
1	x1m	PL 18 x 450	990	(T)	6	3	~~62.94~~	62.95
2	x1p	PL 20 x 200	990	(T)	6	2	~~31.08~~	62.17
1	x1aa	PL 10 x 450	392	FILL	6	7	13.85	
2	x2d	PL 38 x 200	1 750		7	1	~~104.39~~	208.81
2	x2g	PL 38 x 200	1 750		7	1	~~104.39~~	208.81
12	x2h	PL 12 x 180	1 750		7	4	~~29.67~~	356.08
8	x2m	PL 12 x 180	1 750		7	4	~~29.67~~	237.38
				TOTAL WEIGHT THIS SHEET:	~~25 176.~~	kgs		

25175.55 kgs JMR 8-17-06 11 08-22-06

VIEW F

GIRDER ~ G10Y

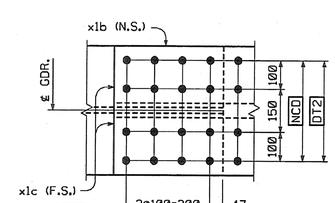

VIEW G

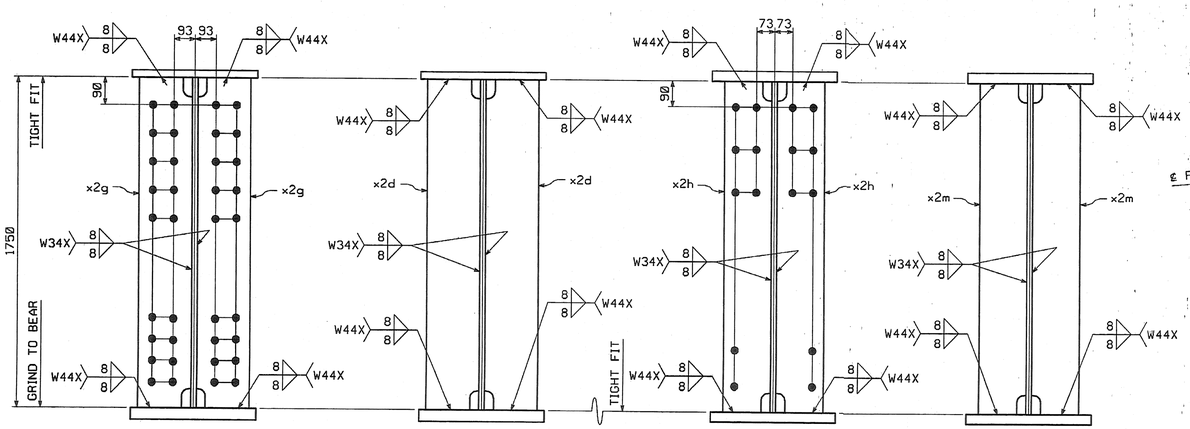

SECTION A

SECTION B

SECTION C

SECTION D

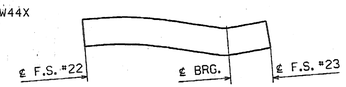

ORIENTATION DIAGRAM

SHOP NOTE

HOLES: 15/16"ø
BOLTS: NONE
PAINT: NONE
FOR GENERAL SHOP NOTES, SEE DWG. GN1.
FOR WEB CAMBER DIAGRAM, SEE DWG. WC4.

SHOP DRAWING REVIEW

☒ REVIEWED AS REQUIRED BY THE CONSTRUCTION CONTRACT DOCUMENTS AND APPROVED, BUT ONLY FOR CONFORMANCE TO THE DESIGN CONCEPT OF THE WORK, AND SUBJECT TO FURTHER LIMITATIONS AND REQUIREMENTS CONTAINED IN THE CONSTRUCTION CONTRACT DOCUMENTS.
☐ REJECTED ☐ REVISE AND RESUBMIT ☐ FURNISH AS CORRECTED

CORRECTIONS OR COMMENTS MADE ON THE SHOP DRAWINGS DURING THIS REVIEW DO NOT RELIEVE CONTRACTOR FROM COMPLIANCE WITH REQUIREMENTS OF THE DRAWINGS AND SPECIFICATIONS. THIS CHECK IS ONLY FOR REVIEW OF GENERAL CONFORMANCE WITH THE DESIGN CONCEPT OF THE PROJECT AND GENERAL COMPLIANCE WITH THE INFORMATION GIVEN IN THE CONTRACT DOCUMENTS. THE CONTRACTOR IS RESPONSIBLE FOR: CONFIRMING AND CORRELATING ALL QUANTITIES AND DIMENSIONS; SELECTING FABRICATION PROCESSES AND TECHNIQUES OF CONSTRUCTION; COORDINATING HIS WORK WITH THAT OF ALL OTHER TRADES; AND PERFORMING HIS WORK IN A SAFE AND SATISFACTORY MANNER.

VHB Vanasse Hangen Brustlin, Inc. Engineers, Planners, and Scientists Six Bedford Farms, Kilton Rd. Bedford, NH 03102 603 644 0888
Job Number: 5099.11
Reviewed By: [illegible]
Date: 11/8/04

NO.	REVISION	BY	DATE
1	INCREASE LENGTHS TO SATISFY REQUIREMENTS FOR LENGTH @ MEAN TEMPERATURE OF 45°F.	DP	9/20/04

HIGH STEEL STRUCTURES, INC.
1770 Hempstead Road
Lancaster, PA 17605-0008
Phone 717/299-5211
A Division of High Industries, Inc.

GIRDER G10Y
VT 78 OVER MISSISQUOI BAY, BRIDGE NO. 2
VT 78 STA.10+970.425 TO STA.12+059.775
TOWNS OF ALBURG AND SWANTON
COUNTIES OF GRAND ISLE AND FRANKLIN
STATE OF VERMONT, AGENCY OF TRANSPORTATION

STATE CONTRACT OR REF. NO. BRF-036-1(1)
CONTRACTOR CIANBRO CORPORATION
IN CHARGE: GLIDDEN (IH) MADE BY: SSL CHK'D. BY: CS DATE: 8-25-04
CONTRACT NUMBER: VT-04057-3 DRAWING NUMBER: 98 OF 112

CODE:30

PLOTTED: 9/20/2004 1:08:29 PM BY: dpunter