METRIC

1. ALL DIMENSIONS ARE IN MILLIMETERS UNLESS OTHERWISE NOTED.
2. ALL WEIGHTS ARE IN KILOGRAMS.

FED. ROAD DIV. NO.	STATE	FED. AID PROJ. NO.
	VT	

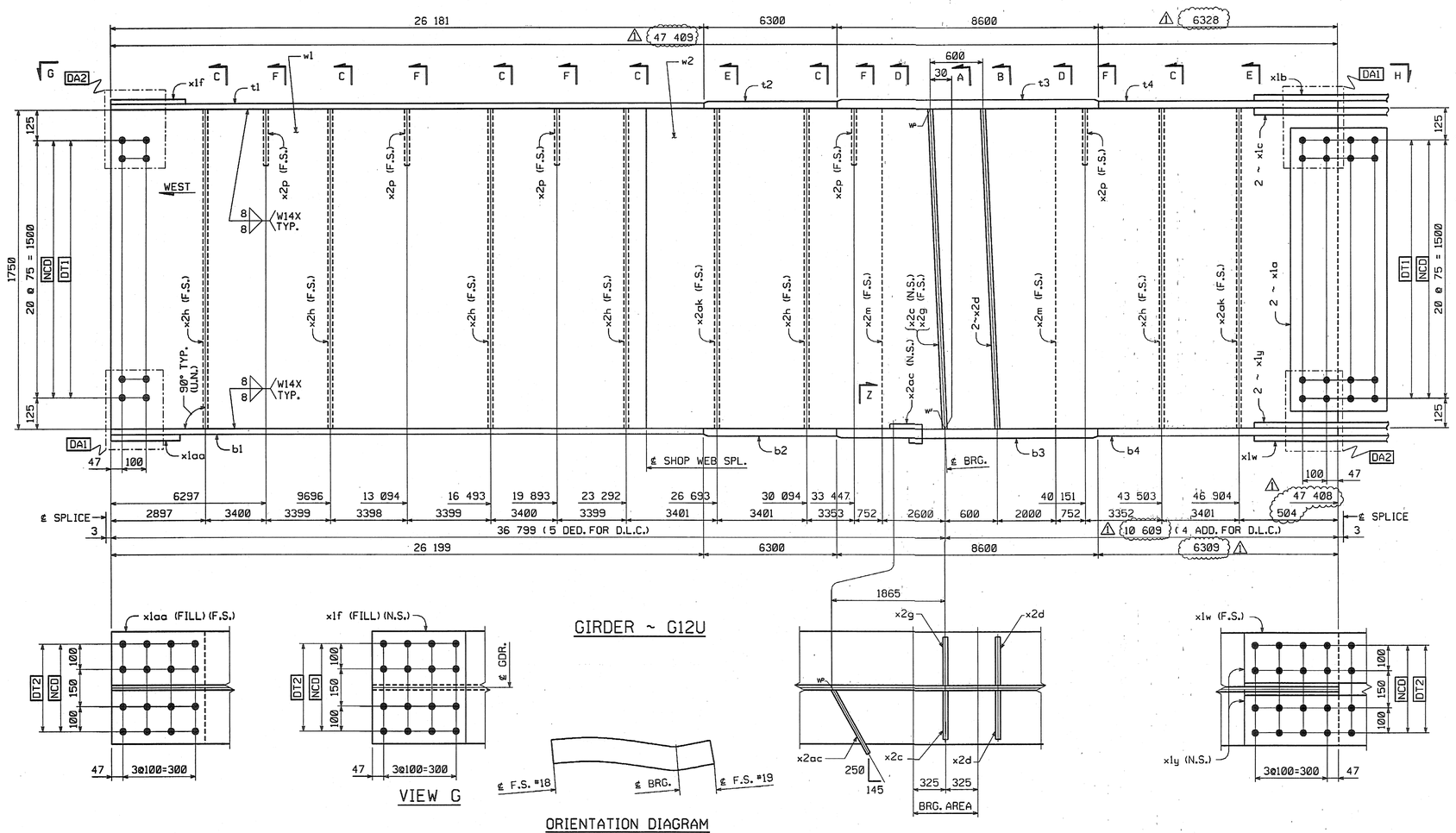

BILL OF MATERIAL

NO.	MARK	DESCRIPTION	LENGTH	REMARKS	GRP.	ITEM	SHIP. WT. KG. EA.	
ONE	G12U	GIRDER					22 350	
~~1~~	~~w1~~	~~PL 16 x 1750~~	~~23 812~~	~~(T)~~	3	4	~~5233.28~~	10420.39
1	w2	PL 16 x 1750	23 609	(T) 47408	3	2	~~5188.66~~	
1	t1	PL 22 x 450	26 181	(T)	4	20	~~2034.42~~	2034.66
1	t2	PL 32 x 450	6 300	(T)	4	15	~~712.07~~	712.15
1	t3	PL 65 x 450	~~8 601~~	(T) 8600	4	2	~~1974.67~~	
1	t4	PL 32 x 450	6 328	(T)	4	13	~~715.24~~	715.32
1	b1	PL 22 x 450	26 199	(T)	4	20	~~2035.82~~	2036.06
1	b2	PL 32 x 450	6 300	(T)	4	15	~~712.07~~	712.15
1	b3	PL 65 x 450	~~8 601~~	(T) 8600	4	2	~~1974.67~~	
1	b4	PL 32 x 450	6 309	(T)	4	14	~~713.09~~	713.17
2	x1a	PL 12 x 1600	400	(T)	6	1	~~60.28~~	120.58
1	x1b	PL 14 x 450	790	(T)	6	6	~~39.06~~	39.07
2	x1c	PL 16 x 200	790	(T)	6	5	~~19.84~~	39.69
1	x1f	PL 10 x 450	392	FILL	6	7	13.85	
1	x1w	PL 14 x 450	790	(T)	6	6	~~39.06~~	39.07
2	x1y	PL 16 x 200	790	(T)	6	5	~~19.84~~	39.69
1	x1aa	PL 10 x 450	392	FILL	6	7	13.85	
1	x2c	PL 38 x 200	1 750		7	1	~~104.39~~	104.41
2	x2d	PL 38 x 200	1 750		7	1	~~104.39~~	208.81
1	x2g	PL 38 x 200	1 750		7	1	~~104.39~~	104.41
6	x2h	PL 12 x 180	1 750		7	4	~~29.67~~	178.04
2	x2m	PL 12 x 180	1 750		7	4	~~29.67~~	59.35
5	x2p	PL 14 x 180	310		7	3	~~6.13~~	30.66
1	x2ac	PL 6 x ~~115~~	301	*Vol = 79650mm³	7	5	~~4.63~~	0.62
2	x2ak	PL 12 x 180	1 750		7	4	~~29.67~~	59.35
TOTAL WEIGHT THIS SHEET:			~~22 346.3~~		kgs			

* SEE SHEET 9 OF 112

22 344.69 kg JMR 8-15-06

22 344.7 kg JMR 8-22-06

VIEW G

GIRDER ~ G12U

ORIENTATION DIAGRAM

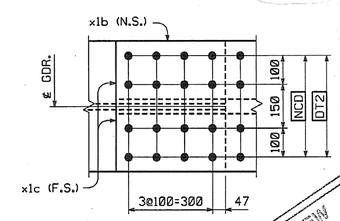

VIEW H

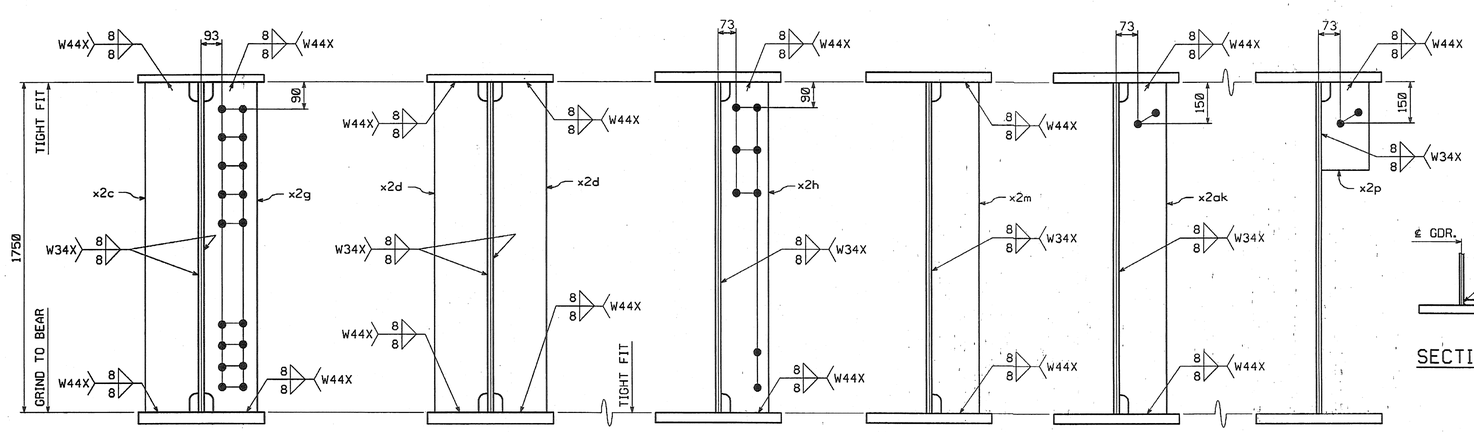

SECTION A
SECTION B
SECTION C
SECTION D
SECTION E
SECTION F

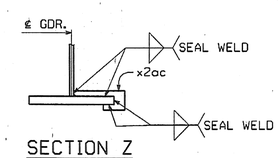

SECTION Z

SHOP NOTE

HOLES: $\frac{15}{16}$"ø
BOLTS: NONE
PAINT: NONE
FOR GENERAL SHOP NOTES, SEE DWG. GN1
FOR WEB CAMBER DIAGRAM, SEE DWG. WC5

SHOP DRAWING REVIEW
☒ REVIEWED AS REQUIRED BY THE DISTRIBUTION CONTRACT DOCUMENTS AND APPROVED. ONLY FOR CONFORMANCE TO THE DESIGN CONCEPT OF THE WORKS AND GENERAL COMPLIANCE WITH THE CONTRACT DOCUMENTS. ☐ REVISE AND RESUBMIT. ☐ REJECTED AS CORRECTED LISTED ABOVE. ☐ REVIEW NOT REQUIRED. THIS REVIEW DOES NOT RELIEVE THE CONTRACTOR OF HIS OBLIGATION TO FURNISH MATERIALS AND PERFORM THE WORK IN ACCORDANCE WITH THE CONTRACT DOCUMENTS. THE CONTRACTOR IS SOLELY RESPONSIBLE FOR DIMENSIONS, THE FABRICATION PROCESS AND TECHNIQUES OF CONSTRUCTION, COORDINATION OF THE WORK WITH THAT OF ALL OTHER TRADES, AND THE SATISFACTORY PERFORMANCE OF THE WORK.
Reviewed by: SSM
Date: 8/22/06
Job Number: 5501
Vermont Agency of Transportation
Structures Section
Bridge Design Section
Engineer: Yon Hsiao, Ph.D., P.E.
Engineer: Steven A. Lutz, P.E.
Bridge Rel. Engineer: Richard Sargent, P.E.
Phone: 802-828-2085

NO.	REVISION	BY	DATE
1	INCREASE LENGTHS TO SATISFY REQUIREMENTS FOR LENGTH @ MEAN TEMPERATURE OF 45°F	DP	9/20/04

HIGH STEEL STRUCTURES, INC.
1770 Hempstead Road
Lancaster, PA 17605-0008
Phone 717/299-5211
A Division of High Industries, Inc.

GIRDER G12U
VT 78 OVER MISSISQUOI BAY, BRIDGE NO. 2
VT 78 STA.10+970.425 TO STA.12+059.775
TOWNS OF ALBURG AND SWANTON
COUNTIES OF GRAND ISLE AND FRANKLIN
STATE OF VERMONT, AGENCY OF TRANSPORTATION

STATE CONTRACT OR REF. NO. BRF-036-1(1)
CONTRACTOR CIANBRO CORPORATION
IN CHARGE: GLIDDEN (IH) MADE BY: ERS CHK'D. BY: CS DATE: 8-24-04
CONTRACT NUMBER: VT-04057-3 DRAWING NUMBER: 84 OF 112

CODE:30

PLOTTED: 9/20/2004 10:57 PM BY: dpunter