METRIC

1. ALL DIMENSIONS ARE IN MILLIMETERS UNLESS OTHERWISE NOTED.
2. ALL WEIGHTS ARE IN KILOGRAMS.

FED. ROAD DIV. NO.	STATE	FED. AID PROJ. NO.
	VT	

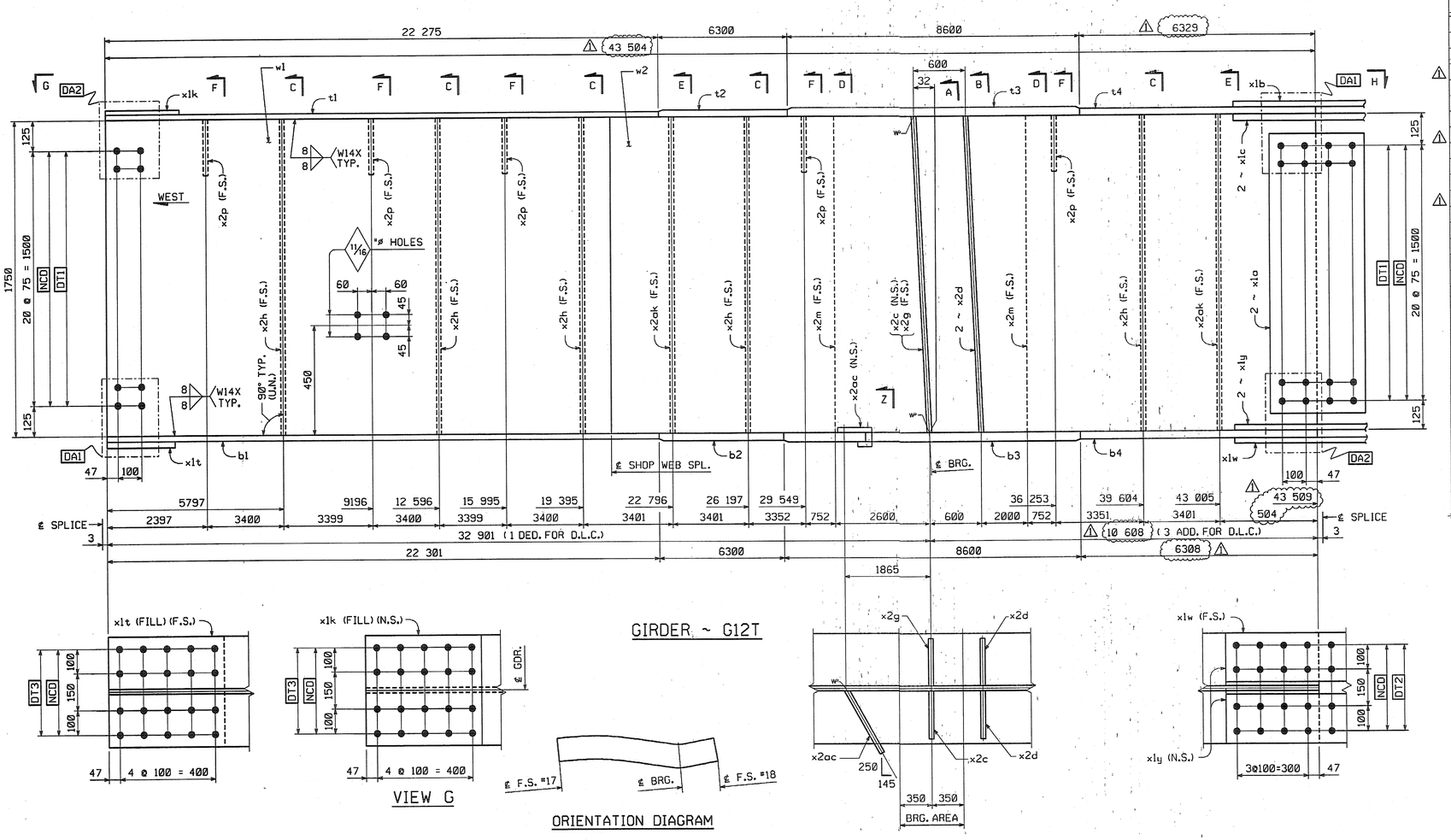

BILL OF MATERIAL

NO.	MARK	DESCRIPTION	LENGTH	REMARKS	GRP.	ITEM	SHIP. WT. KG. EA.	
ONE	G12T	GIRDER					20 890	
~~1~~	~~w1~~	~~PL 16 x 1750~~	~~19 908~~	~~(T)~~	~~3~~	~~9~~	~~4375.28~~	4562.73
1	w2	PL 16 x 1750	~~23 608~~	(T) 4550.6	3	2	~~5188.44~~	1731.10
1	t1	PL 22 x 450	22 275	(T)	4	25	~~1730.90~~	712.15
1	t2	PL 32 x 450	6 300	(T)	4	15	~~712.07~~	1974.67
1	t3	PL 65 x 450	8 600	(T)	4	3	~~1974.44~~	715.43
1	t4	PL 32 x 450	6 329	(T)	4	13	~~715.35~~	1733.12
1	b1	PL 22 x 450	22 301	(T)	4	23	~~1732.92~~	712.15
1	b2	PL 32 x 450	6 300	(T)	4	15	~~712.07~~	1974.67
1	b3	PL 65 x 450	8 600	(T)	4	3	~~1974.44~~	713.06
1	b4	PL 32 x 450	6 308	(T)	4	14	~~712.97~~	
2	x1a	PL 12 x 1600	400	(T)	6	1	~~80.28~~	120.58
1	x1b	PL 14 x 450	790	(T)	6	6	~~39.06~~	39.07
2	x1c	PL 16 x 200	790	(T)	6	5	~~19.84~~	39.69
1	x1k	PL 18 x 450	492	FILL	6	4	31.28	
1	x1t	PL 18 x 450	492	FILL	6	4	31.28	
1	x1w	PL 14 x 450	790	(T)	6	6	~~39.06~~	39.07
2	x1y	PL 16 x 200	790	(T)	6	5	~~19.84~~	39.69
1	x2c	PL 38 x 200	1 750		7	1	~~104.39~~	104.41
2	x2d	PL 38 x 200	1 750		7	1	~~104.39~~	208.81
1	x2g	PL 38 x 200	1 750		7	1	~~104.39~~	104.41
5	x2h	PL 12 x 180	1 750		7	4	~~29.67~~	148.37
2	x2m	PL 12 x 180	1 750		7	4	~~29.67~~	59.35
5	x2p	PL 14 x 180	310		7	3	~~6.13~~	30.66
2	x2ak	PL 12 x 180	1 750		7	4	~~29.67~~	59.35
1	x2ac	PL 6 x 115	301	*V_{GL} = 79.658m²	7	5	~~1.63~~	0.62
		TOTAL WEIGHT THIS SHEET:	~~20 886.4~~	**kgs**				

* SEE SHEET 90 OF 112

~~20885.72 kg~~ JMR 8-15-06
20465.72 kg JMR 8-21-06

VIEW G

GIRDER ~ G12T

ORIENTATION DIAGRAM

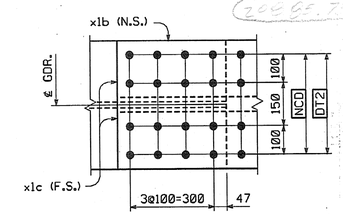

VIEW H

SHOP NOTE

HOLES: 11/16" (U.N.)
BOLTS: NONE
PAINT: NONE
FOR GENERAL SHOP NOTES, SEE DWG. GN1.
FOR WEB CAMBER DIAGRAM, SEE DWG. WC4.

SHOP DRAWING REVIEW
REQUIRED BY THE CONTRACT DOCUMENTS AND APPROVED, BUT ONLY FOR CONFORMANCE TO THE DESIGN CONCEPT OF THE WORK AND SUBJECT TO FURTHER LIMITATIONS AND REQUIREMENTS CONTAINED IN THE CONTRACT DOCUMENTS.
☐ REVISE AND RESUBMIT ☐ REVISION AS CORRECTED
☐ REJECTED
CORRECTIONS OR COMMENTS MADE ON THE SHOP DRAWING DURING REVIEW DO NOT RELIEVE THE CONTRACTOR FROM COMPLIANCE WITH THE CONTRACT DRAWINGS AND SPECIFICATIONS. THE CONTRACTOR IS RESPONSIBLE FOR THE CORRECTNESS OF DETAILS, DIMENSIONS, MATERIALS AND CONSTRUCTION TECHNIQUES. THIS REVIEW IS ONLY FOR GENERAL CONFORMANCE WITH THE DESIGN CONCEPT OF THE PROJECT AS INDICATED ON THE CONTRACT DRAWINGS AND SPECIFICATIONS. THE CONTRACTOR IS RESPONSIBLE FOR CONFIRMING AND CORRELATING ALL QUANTITIES AND DIMENSIONS, FABRICATION PROCESSES AND TECHNIQUES OF CONSTRUCTION, INSTALLATION AND COORDINATION OF ALL OTHER TRADES.
VHB Vanasse Hangen Brustlin, Inc. Engineers, Planners, Scientists, and Subsidiaries Six Deerfield Farms, Hilton Road, Bedford, NH 03102 603 644-0523
Job Number: 5041
Reviewed By: RMH
Date: 11/04

NO.	REVISION	BY	DATE
1	INCREASE LENGTHS TO SATISFY REQUIREMENTS FOR LENGTH @ MEAN TEMPERATURE OF 45°F.	DP	9/20/04

HIGH STEEL STRUCTURES, INC.
1770 Hempstead Road
Lancaster, PA 17605-0008
Phone 717/299-5211
A Division of High Industries, Inc.

GIRDER G12T
VT 78 OVER MISSISQUOI BAY, BRIDGE NO. 2
VT 78 STA.10+970.425 TO STA.12+059.775
TOWNS OF ALBURG AND SWANTON
COUNTIES OF GRAND ISLE AND FRANKLIN
STATE OF VERMONT, AGENCY OF TRANSPORTATION

STATE CONTRACT OR REF. NO. BRF-036-1(1)
CONTRACTOR CIANBRO CORPORATION
IN CHARGE: GLIDDEN (IH) MADE BY: SSL CHK'D. BY: CG DATE: 8-24-04
CONTRACT NUMBER: VT-04057-3 DRAWING NUMBER: 80 OF 112

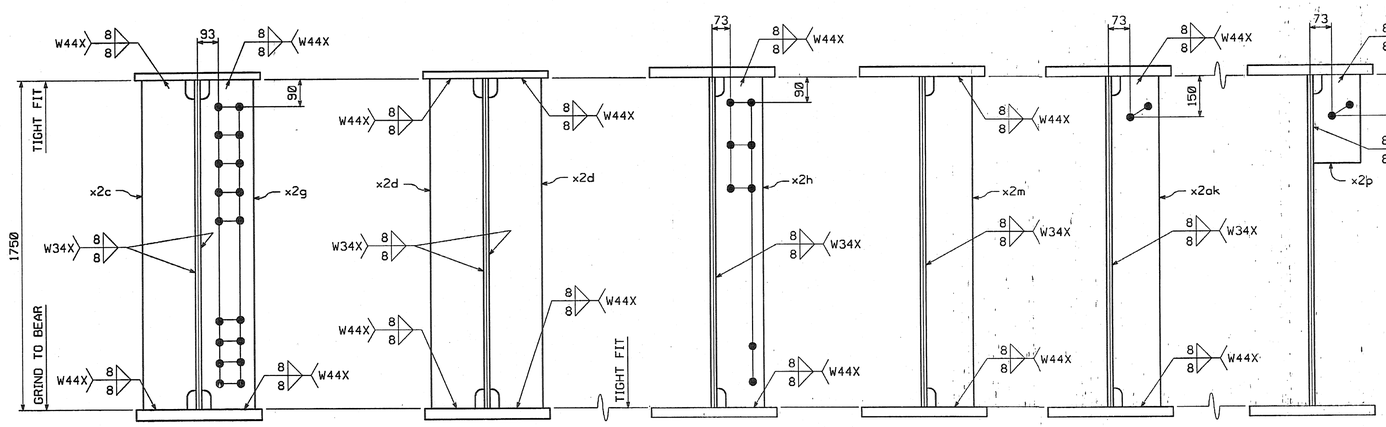

SECTION A
SECTION B
SECTION C
SECTION D
SECTION E
SECTION F

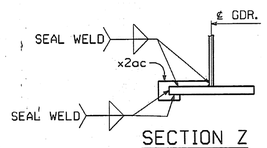

SECTION Z

CODE:30

PLOTTED: 9/28/2004 1:07:48 PM BY: dpontier