METRIC

1. ALL DIMENSIONS ARE IN MILLIMETERS UNLESS OTHERWISE NOTED.
2. ALL WEIGHTS ARE IN KILOGRAMS.

FED. ROAD DIV. NO.	STATE	FED. AID PROJ. NO.
	VT	

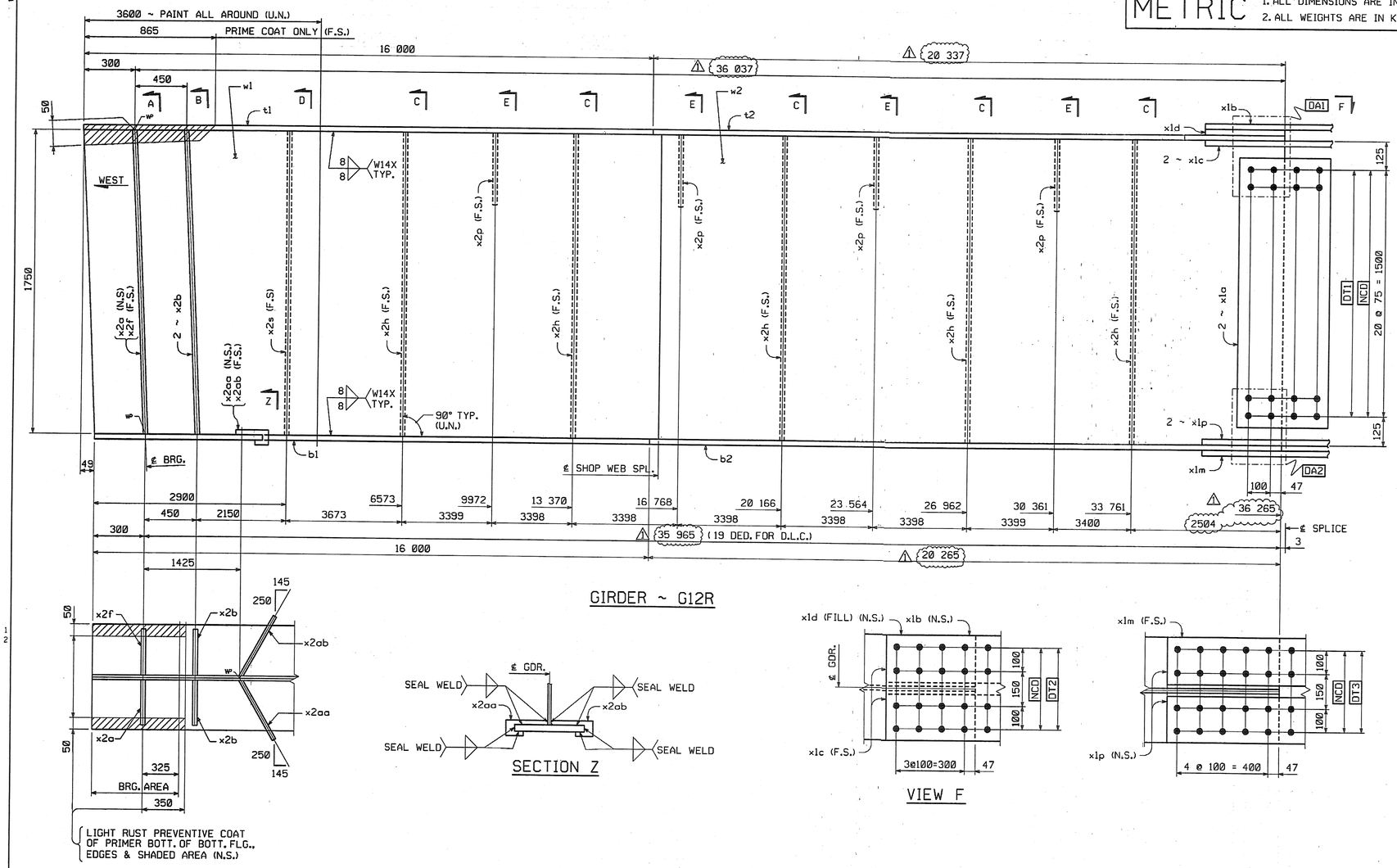

GIRDER ~ G12R

SECTION Z

VIEW F

BILL OF MATERIAL

NO.	MARK	DESCRIPTION	LENGTH	REMARKS	GRP.	ITEM	SHIP. WT. KG. EA.	
ONE	G12R	GIRDER					16 730	
~~1~~	~~w1~~	~~PL 16 x 1750~~	~~16 342~~	~~(T)~~	~~3~~	~~10~~	~~3591.56~~	
1	w2	PL 16 x 1750	~~19 996~~	(T) 36301	3	8	~~4394.62~~	7978.96
1	t1	PL 22 x 450	~~16 001~~	(T) 16000	4	28	~~1243.38~~	1243.44
1	t2	PL 22 x 450	20 337	(T)	4	26	1580.31	1580.49
1	b1	PL 40 x 450	~~16 001~~	(T) 16000	4	5	2260.68	2260.80
1	b2	PL 40 x 450	20 265	(T)	4	4	2863.12	2863.44
2	x1a	PL 12 x 1600	400	(T)	6	1	~~60.28~~	120.58
1	x1b	PL 14 x 450	790	(T)	6	6	~~39.06~~	39.07
2	x1c	PL 16 x 200	790	(T)	6	5	~~19.84~~	39.69
1	x1d	PL 18 x 450	392	FILL	6	4	~~24.92~~	24.93
1	x1m	PL 18 x 450	990	(T)	6	3	~~62.94~~	62.95
2	x1p	PL 20 x 200	990	(T)	6	2	~~31.08~~	62.17
1	x2a	PL 22 x 200	1 750		7	2	~~60.44~~	60.45
2	x2b	PL 22 x 200	1 750		7	2	~~60.44~~	120.89
1	x2f	PL 22 x 200	1 750		7	2	~~60.44~~	60.45
5	x2h	PL 12 x 180	1 750		7	4	~~29.67~~	148.37
4	x2p	PL 14 x 180	310		7	3	~~6.13~~	24.53
1	x2s	PL 12 x 180	1 750		7	4	29.67	
1	x2aa	PL 6 x ~~90~~	301	*V=1=72150mm³	7	5	~~1.28~~	0.57
1	x2ab	PL 6 x ~~90~~	301	" " "	7	5	~~1.28~~	0.57

TOTAL WEIGHT THIS SHEET: ~~16729.85~~ kgs

* SEE SHEET 1 OF 112 (16722.02 kg) EMR 08-21-06

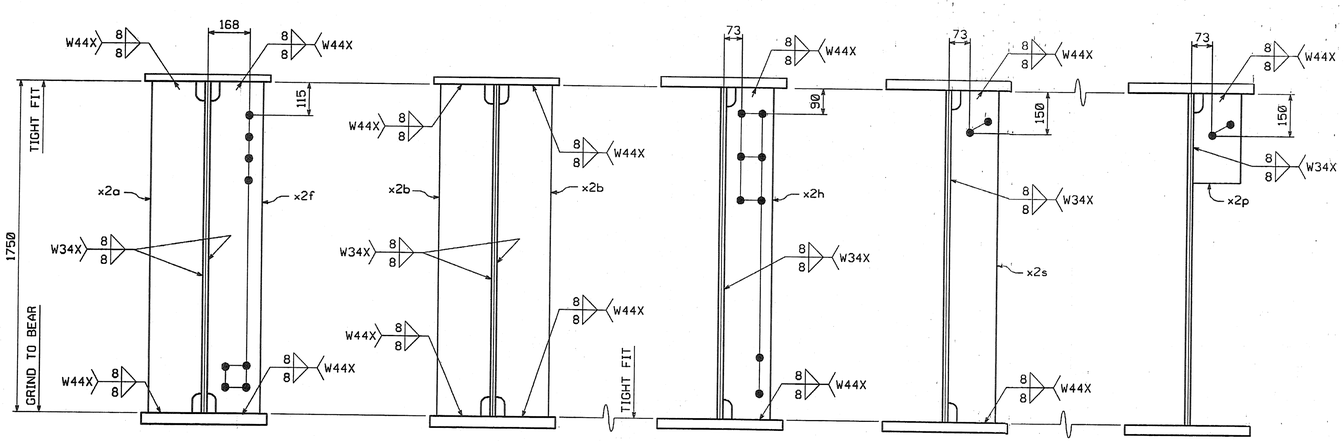

SECTION A

SECTION B

SECTION C

SECTION D

SECTION E

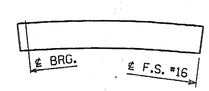

ORIENTATION DIAGRAM

SHOP NOTE

HOLES: 15/16"ø
BOLTS: NONE
PAINT: SEE DWG. GN1
FOR GENERAL SHOP NOTES, SEE DWG. GN1.
FOR WEB CAMBER DIAGRAM, SEE DWG. WC4.

CODE:30

SHOP DRAWING REVIEW

☒ REVIEWED AS REQUIRED BY THE CONSTRUCTION CONTRACT DOCUMENTS AND APPROVED, BUT ONLY FOR CONFORMANCE TO THE DESIGN CONCEPT OF THE WORK, AND SUBJECT TO FURTHER LIMITATIONS AND REQUIREMENTS CONTAINED IN THE CONSTRUCTION CONTRACT DOCUMENTS.
☐ REJECTED ☐ REVISE AND RESUBMIT ☐ FURNISH AS CORRECTED

CORRECTIONS OR COMMENTS MADE ON THE SHOP DRAWINGS DURING THIS REVIEW DO NOT RELIEVE CONTRACTOR FROM COMPLIANCE WITH REQUIREMENTS OF THE DRAWINGS AND SPECIFICATIONS. THIS CHECK IS ONLY FOR REVIEW OF GENERAL CONFORMANCE WITH THE DESIGN CONCEPT OF THE PROJECT AND GENERAL COMPLIANCE WITH THE INFORMATION GIVEN IN THE CONTRACT DOCUMENTS. THE CONTRACTOR IS RESPONSIBLE FOR CONFIRMING AND CORRELATING ALL QUANTITIES AND DIMENSIONS; FABRICATION PROCESSES AND TECHNIQUES OF CONSTRUCTION; COORDINATING HIS WORK WITH THAT OF ALL OTHER TRADES; AND PERFORMING HIS WORK IN A SAFE AND SATISFACTORY MANNER.

VHB Vanasse Hangen Brustlin, Inc. Engineers, Planners, and Scientists 56 Bedford Farms, Killian Rd. Bedford, NH 03102 603 644 0888
Job Number: 5094
Reviewed By: SMH
Date: 11/9/04

NO.	REVISION	BY	DATE
1	INCREASE LENGTHS TO SATISFY REQUIREMENTS FOR LENGTH @ MEAN TEMPERATURE OF 45°F.	DP	9/20/04

HIGH STEEL STRUCTURES, INC.
1770 Hempstead Road
Lancaster, PA 17605-0008
Phone 717/299-5211
A Division of High Industries, Inc.

GIRDER G12R
VT 78 OVER MISSISQUOI BAY, BRIDGE NO. 2
VT 78 STA.10+970.425 TO STA.12+059.775
TOWNS OF ALBURG AND SWANTON
COUNTIES OF GRAND ISLE AND FRANKLIN
STATE OF VERMONT, AGENCY OF TRANSPORTATION

STATE CONTRACT OR REF. NO. BRF-036-1(1)
CONTRACTOR CIANBRO CORPORATION
IN CHARGE: GLIDDEN (IH) MADE BY: SSL CHK'D. BY: CS DATE: 8-24-04
CONTRACT NUMBER: VT-04057-3 DRAWING NUMBER: 72 OF 112

PLOTTED: 9/20/2004 1:07:31 PM BY: dpainter