METRIC

METRIC

1. ALL DIMENSIONS ARE IN MILLIMETERS UNLESS OTHERWISE NOTED.
2. ALL WEIGHTS ARE IN KILOGRAMS.

FED. ROAD DIV. NO.	STATE	FED. AID PROJ. NO.
	VT	

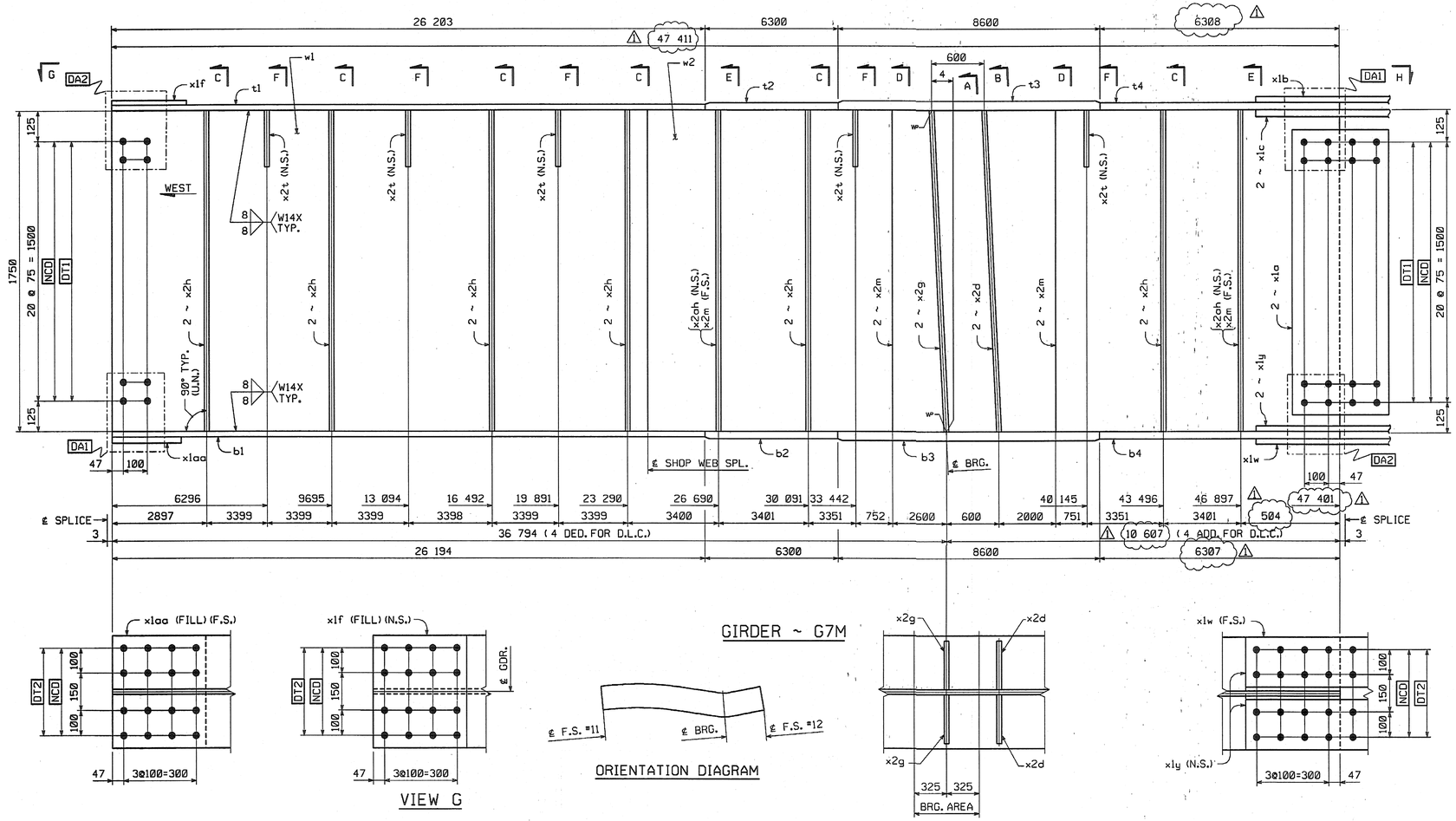

BILL OF MATERIAL

NO.	MARK	DESCRIPTION	LENGTH	REMARKS	GRP.	ITEM	SHIP. WT. KG. EA.
ONE	G7M	GIRDER					22 640
~~1~~	~~w1~~	~~PL 16 x 1750~~	~~23 808~~	~~(T)~~	~~3~~	~~6~~	~~5232.40~~
1	w2	PL 16 x 1750	~~23 610~~ 17406	(T)	3	7	~~5188.88~~ 10419.83
1	t1	PL 22 x 450	26 203	(T)	4	19	~~2036.13~~ 2036.37
1	t2	PL 32 x 450	6 300	(T)	4	15	~~712.07~~ 712.15
1	t3	PL 65 x 450	8 600	(T)	4	3	~~1974.44~~ 1974.67
1	t4	PL 32 x 450	6 308	(T)	4	14	712.97 713.06
1	b1	PL 22 x 450	26 194	(T)	4	20	~~2035.43~~ 2035.67
1	b2	PL 32 x 450	6 300	(T)	4	15	~~712.07~~ 712.15
1	b3	PL 65 x 450	8 600	(T)	4	3	~~1974.44~~ 1974.67
1	b4	PL 32 x 450	6 307	(T)	4	14	~~712.86~~ 712.94
2	x1a	PL 12 x 1600	400	(T)	6	1	~~60.28~~ 120.55
1	x1b	PL 14 x 450	790	(T)	6	6	~~39.06~~ 39.07
2	x1c	PL 16 x 200	790	(T)	6	5	~~19.84~~ 39.69
1	x1f	PL 10 x 450	392	FILL	6	7	13.85
1	x1w	PL 14 x 450	790	(T)	6	6	~~39.06~~ 39.07
2	x1y	PL 16 x 200	790	(T)	6	5	~~19.84~~ 39.69
1	x1aa	PL 10 x 450	392	FILL	6	7	13.85
2	x2d	PL 38 x 200	1 750		7	1	~~104.39~~ 208.81
2	x2g	PL 38 x 200	1 750		7	1	~~104.39~~ 208.81
12	x2h	PL 12 x 180	1 750		7	4	~~29.67~~ 356.08
6	x2m	PL 12 x 180	1 750		7	4	29.67 178.04
5	x2t	PL 14 x 180	310		7	3	~~6.13~~ 30.66
2	x2ah	PL 12 x 180	1 750		7	4	~~29.67~~ 59.35
		TOTAL WEIGHT THIS SHEET:	~~22 639.08~~	kgs			

22639.06 kg JMR 8-1-06

VIEW G

ORIENTATION DIAGRAM

GIRDER ~ G7M

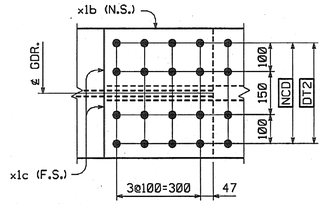

VIEW H

SHOP NOTE

HOLES: 15/16"ø
BOLTS: NONE
PAINT: NONE
FOR GENERAL SHOP NOTES, SEE DWG. GN1.
FOR WEB CAMBER DIAGRAM, SEE DWG. WC3.

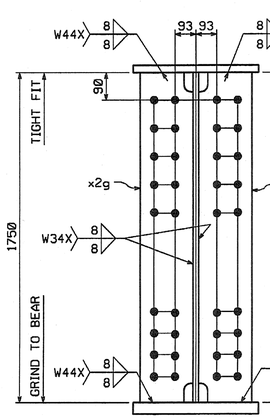

SECTION A

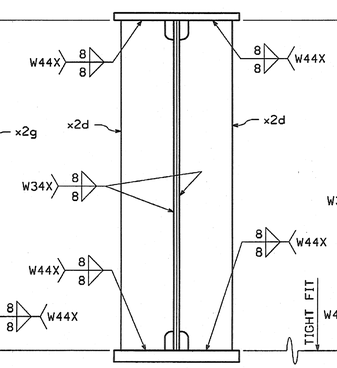

SECTION B

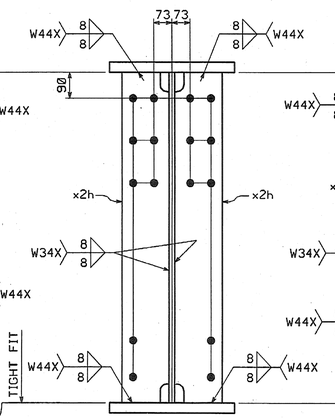

SECTION C

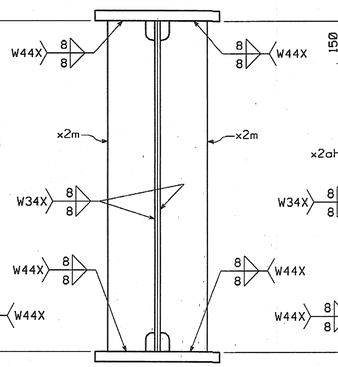

SECTION D

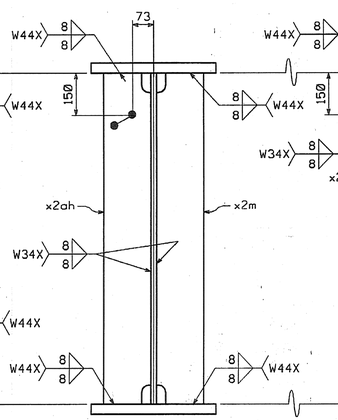

SECTION E

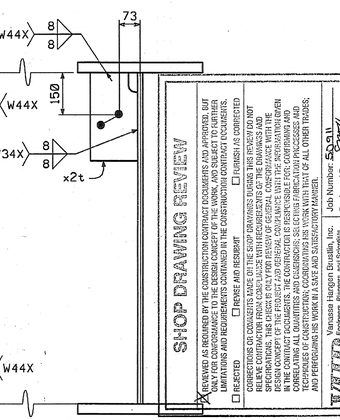

SECTION F

SHOP DRAWING REVIEW

REVIEWED AS REQUIRED BY THE CONSTRUCTION CONTRACT DOCUMENTS AND APPROVED, BUT ONLY FOR CONFORMANCE TO THE DESIGN CONCEPT OF THE WORK, AND SUBJECT TO FURTHER REVIEWS AND REQUIREMENTS OF THE CONTRACT DOCUMENTS WHEN CORRECTIONS HAVE BEEN MADE AND RESUBMITTED.

☐ REVISE AND RESUBMIT
☐ REJECTED
☐ EXCEPTIONS OR CORRECTIONS EQUAL ON THE SHOP DRAWINGS SUBMITTED THIS REVIEW DO NOT RELIEVE CONTRACTOR FROM COMPLIANCE WITH REQUIREMENTS OF THE DRAWINGS AND SPECIFICATIONS. THIS CHECK IS ONLY FOR REVIEW OF GENERAL CONFORMANCE WITH THE DESIGN CONCEPT OF THE PROJECT AS SHOWN ON THE DRAWINGS AND SPECIFIED IN THE CONTRACT DOCUMENTS. THE CONTRACTOR IS RESPONSIBLE FOR: CONFIRMING AND CORRELATING ALL QUANTITIES AND DIMENSIONS; SELECTING FABRICATION PROCESSES AND TECHNIQUES OF CONSTRUCTION; COORDINATING THE WORK WITH ALL OTHER TRADES; AND PERFORMING THE WORK IN A SAFE AND SATISFACTORY MANNER.

Job Number: 5241
Reviewed By: RZM
Vanasse Hangen Brustlin, Inc.
Engineers, Planners, and Scientists
Burlington, Rutland, Montpelier

NO.	REVISION	BY	DATE
1	INCREASE LENGTHS TO SATISFY REQUIREMENTS FOR LENGTH @ MEAN TEMPERATURE OF 45°F.	JSA	9/17/04
2			
3			
4			

HIGH STEEL STRUCTURES, INC.
1770 Hempstead Road
Lancaster, PA 17605-0008
Phone 717/299-5211
A Division of High Industries, Inc.

GIRDER G7M
VT 78 OVER MISSISQUOI BAY, BRIDGE NO. 2
VT 78 STA.10+970.425 TO STA.12+059.775
TOWNS OF ALBURG AND SWANTON
COUNTIES OF GRAND ISLE AND FRANKLIN
STATE OF VERMONT, AGENCY OF TRANSPORTATION

STATE CONTRACT OR REF. NO. BRF-036-1(1)
CONTRACTOR CIANBRO CORPORATION
IN CHARGE: GLIDDEN (IH) MADE BY: SSJ CHK'D. BY: CS DATE: 8-20-04
CONTRACT NUMBER: VT-04057-2 DRAWING NUMBER: 51 OF 112

CODE:30

PLOTTED: 9/20/2004 1:06:40 PM BY: dpainter