METRIC

1. ALL DIMENSIONS ARE IN MILLIMETERS UNLESS OTHERWISE NOTED.
2. ALL WEIGHTS ARE IN KILOGRAMS.

FED. ROAD DIV. NO.	STATE	FED. AID PROJ. NO.
	VT	

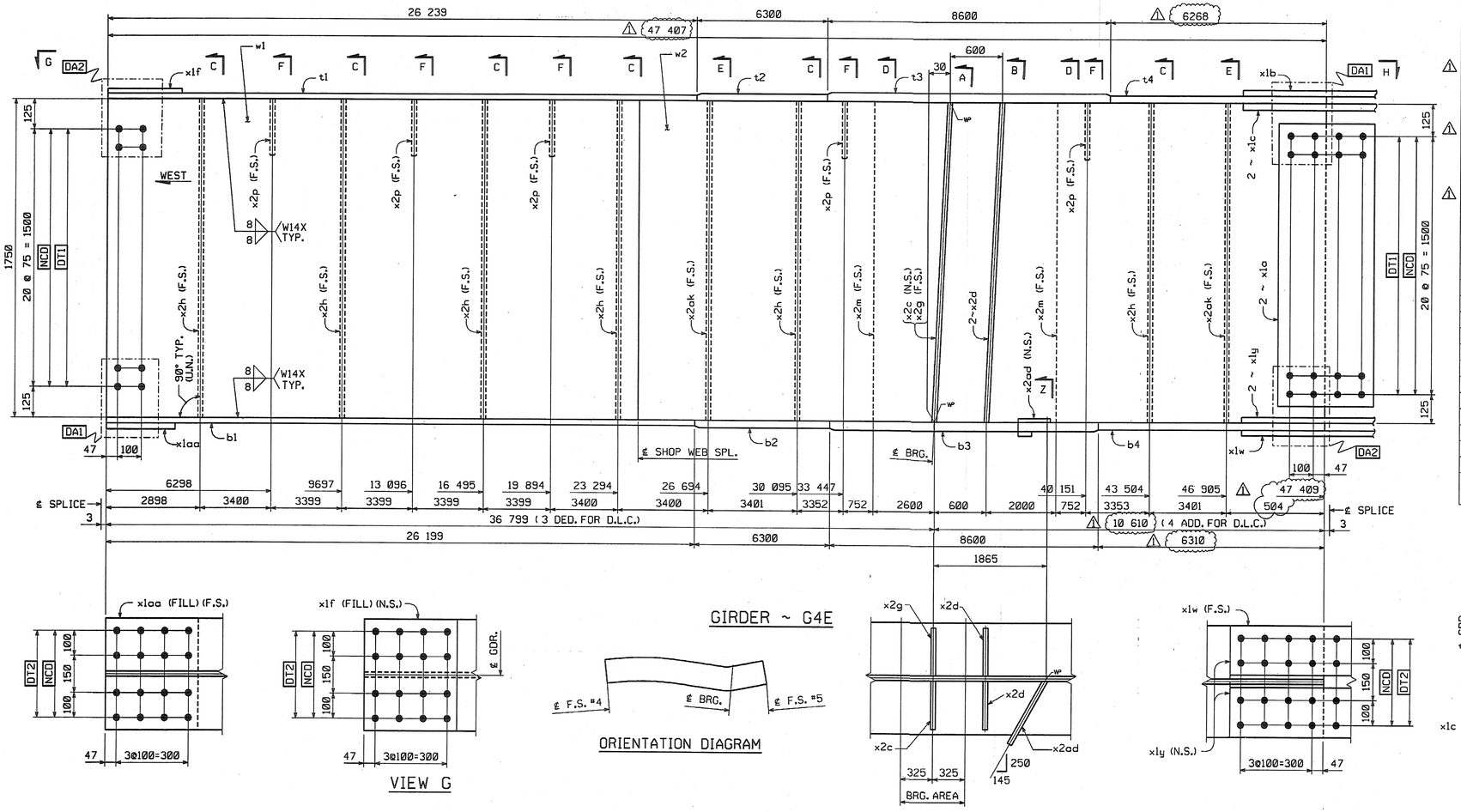

VIEW G

GIRDER ~ G4E

ORIENTATION DIAGRAM

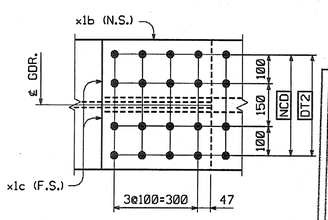

VIEW H

BILL OF MATERIAL

NO.	MARK	DESCRIPTION	LENGTH	REMARKS	GRP.	ITEM	SHIP. WT. KG. EA
ONE	G4E	GIRDER					22 350
~~1~~	~~w1~~	~~PL 16 x 1750~~	~~23 810~~	~~(T)~~	3	6	~~5232.84~~
1	w2	PL 16 x 1750	~~23 609~~	(T) 47408	3	2	~~5188.66~~
1	t1	PL 22 x 450	26 239	(T)	4	18	~~2038.93~~
1	t2	PL 32 x 450	6 300	(T)	4	15	~~712.07~~
1	t3	PL 65 x 450	8 600	(T)	4	3	~~1974.44~~
1	t4	PL 32 x 450	~~6 269~~	(T) 6268	4	16	~~708.57~~
1	b1	PL 22 x 450	26 199	(T)	4	20	~~2035.82~~
1	b2	PL 32 x 450	6 300	(T)	4	15	~~712.07~~
1	b3	PL 65 x 450	8 600	(T)	4	3	~~1974.44~~
1	b4	PL 32 x 450	~~6 311~~	(T) 630	4	14	~~713.31~~
2	x1a	PL 12 x 1600	400	(T)	6	1	~~60.28~~
1	x1b	PL 14 x 450	790	(T)	6	6	~~39.06~~
2	x1c	PL 16 x 200	790	(T)	6	5	~~19.84~~
1	x1f	PL 10 x 450	392	FILL	6	7	13.85
1	x1w	PL 14 x 450	790	(T)	6	6	~~39.06~~
2	x1y	PL 16 x 200	790	(T)	6	5	~~19.84~~
1	x1aa	PL 10 x 450	392	FILL	6	7	13.85
1	x2c	PL 38 x 200	1 750		7	1	~~104.39~~
2	x2d	PL 38 x 200	1 750		7	1	~~104.39~~
1	x2g	PL 38 x 200	1 750		7	1	~~104.39~~
6	x2h	PL 12 x 180	1 750		7	4	~~29.67~~
2	x2m	PL 12 x 180	1 750		7	4	~~29.67~~
5	x2p	PL 14 x 180	310		7	3	~~6.13~~
2	x2ak	PL 12 x 180	1 750	*	7	4	~~29.67~~
1	x2ad	PL 6 x ~~115~~	301	Vol = 79658 mm³	7	5	~~1.63~~
		TOTAL WEIGHT THIS SHEET:	~~22 343.47~~	kgs			

* See Sheet 9 of 112

22342.6 kgs JMR 7-25-06

JMR 8-22-06

08-21-06

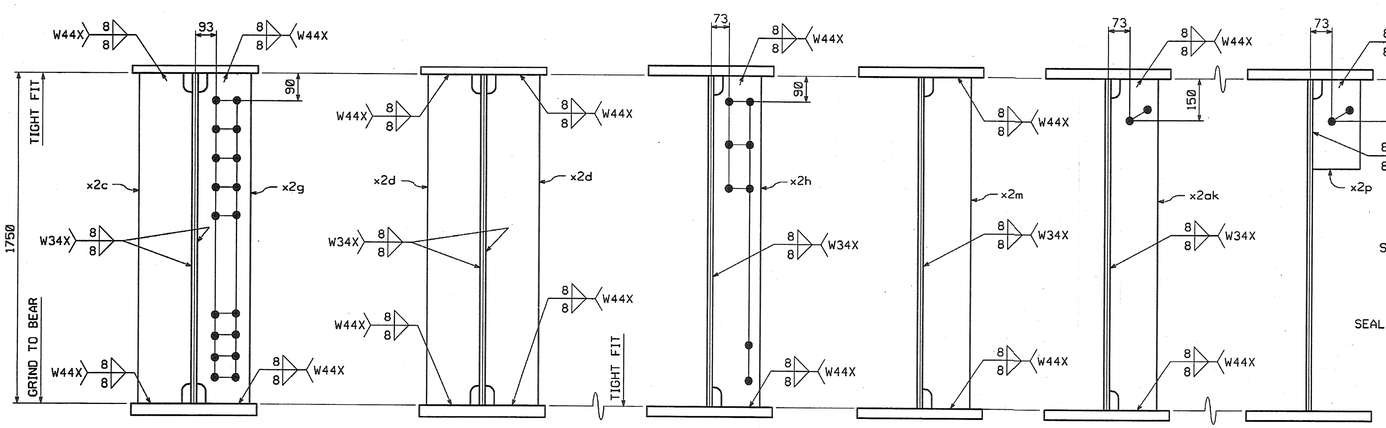

SECTION A

SECTION B

SECTION C

SECTION D

SECTION E

SECTION F

SECTION Z

SHOP NOTE

HOLES: 15/16"ø
BOLTS: NONE
PAINT: NONE
FOR GENERAL SHOP NOTES, SEE DWG. GN1.
FOR WEB CAMBER DIAGRAM, SEE DWG. W02.

SHOP DRAWING REVIEW

X REVIEWED AS REQUIRED BY THE CONTRACT DOCUMENTS AND APPROVED, BUT ONLY FOR CONFORMANCE TO THE DESIGN CONCEPT OF THE WORK AND WITH THE LIMITATIONS AND REQUIREMENTS CONTAINED IN THE CONSTRUCTION CONTRACT DOCUMENTS.

☐ REVISE AND RESUBMIT ☐ REVIEWED AS CORRECTED

☐ NOT REVIEWED ☐ CORRECTIONS OR COMMENTS MADE ON THE SHOP DRAWINGS DURING THIS REVIEW DO NOT RELIEVE CONTRACTOR FROM COMPLIANCE WITH THE REQUIREMENTS OF THE CONTRACT DOCUMENTS. THE CHECK IS ONLY FOR REVIEW OF GENERAL CONFORMANCE WITH THE DESIGN CONCEPT OF THE PROJECT AND GENERAL COMPLIANCE WITH THE INFORMATION GIVEN IN THE CONTRACT DOCUMENTS. THE CONTRACTOR IS RESPONSIBLE FOR CONFIRMING AND CORRELATING ALL QUANTITIES AND DIMENSIONS, SELECTING FABRICATION PROCESSES AND TECHNIQUES OF CONSTRUCTION, COORDINATING WORK WITH ALL OTHER TRADES, AND PERFORMING HIS WORK IN A SAFE AND SATISFACTORY MANNER.

Vanasse Hangen Brustlin, Inc.
Engineers, Planners, and Scientists
Bedford Corporate Park
Bedford, NH 03110 Boston Area 66

Job Number: 5.0911
Reviewed by: RJM
Date: 11/8/04

NO.	REVISION	BY	DATE
1	INCREASE LENGTHS TO SATISFY REQUIREMENTS FOR LENGTH @ MEAN TEMPERATURE OF 45°F.	DP	9/17/04

HIGH STEEL STRUCTURES, INC.
1770 Hempstead Road
Lancaster, PA 17605-0008
Phone 717/299-5211
A Division of High Industries, Inc.

GIRDER	G4E
VT 78 OVER MISSISQUOI BAY, BRIDGE NO. 2	
VT 78 STA.10+970.425 TO STA.12+059.775	
TOWNS OF ALBURG AND SWANTON	
COUNTIES OF GRAND ISLE AND FRANKLIN	
STATE OF VERMONT, AGENCY OF TRANSPORTATION	

STATE CONTRACT OR REF. NO. BRF-036-1(1)
CONTRACTOR CIANBRO CORPORATION
IN CHARGE: GLIDDEN (IH) MADE BY: EES CHK'D. BY: CG DATE: 8-19-04
CONTRACT NUMBER: VT-04057-1 DRAWING NUMBER: 20 OF 112

CODE:30

BY: dpanter
PLOTTED: 9/20/2004 1:05:03 PM