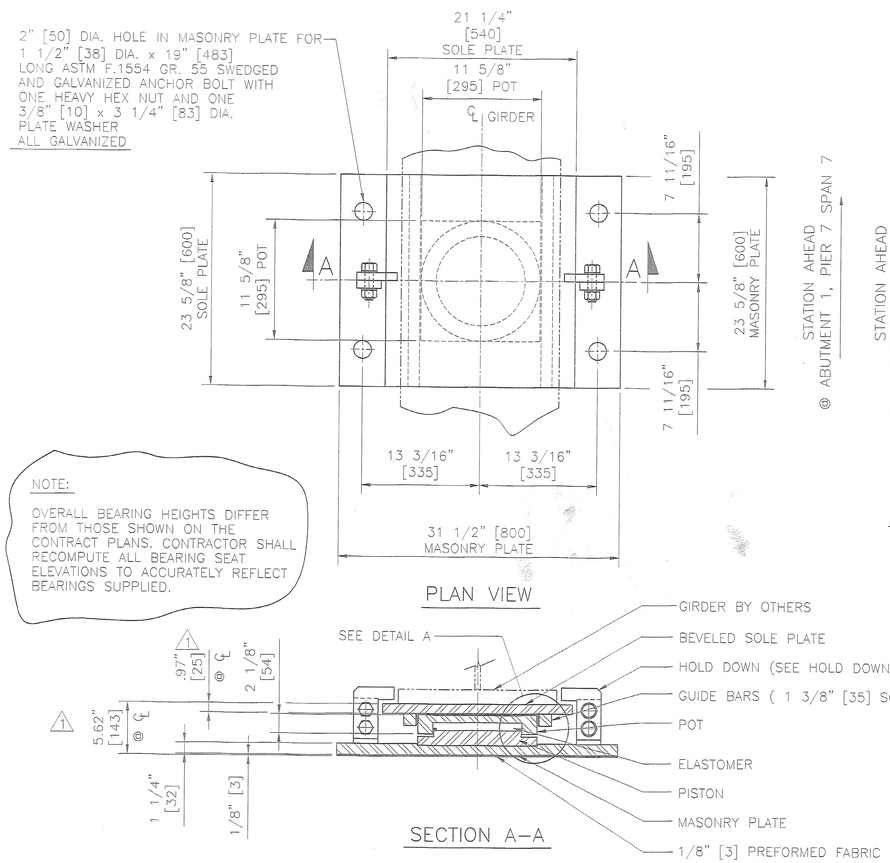

NOTE:

OVERALL BEARING HEIGHTS DIFFER FROM THOSE SHOWN ON THE CONTRACT PLANS. CONTRACTOR SHALL RECOMPUTE ALL BEARING SEAT ELEVATIONS TO ACCURATELY REFLECT BEARINGS SUPPLIED.

PLAN VIEW

SIDE ELEVATION

SOLE PLATE ONLY

SECTION A–A

GUIDED EXPANSION POT BEARING

LOCATION – ABUTMENT NO. 1 AND PIER 7, SPAN 7, PIER 15, SPAN 16 & ABUTMENT 2, GIRDERS 1 THROUGH 4

TOTAL QUANTITY REQUIRED – 16

TOTAL VERTICAL CAPACITY – 272 KIPS [1206 kN]
TOTAL HORIZONTAL CAPACITY – 32 KIPS [142 kN]
TOTAL LONGITUDINAL MOVEMENT = 9.13" [232mm]
TOTAL TRANSVERSE MOVEMENT = 1/4" [6mm]
ROTATION CAPACITY – 0.025 RADIANS 1

BEARING MATERIALS

STEEL – ASTM A.709 GR. 50 ZINC METALLIZED
STAINLESS STEEL – ASTM A.240 TYPE 304, 10 RMS FINISH OR LESS
PTFE – ASTM D.4894 VIRGIN UNFILLED
ELASTOMER – AASHTO 50 DUROMETER NEOPRENE
BRASS RINGS – ASTM B.36 HALF HARD
PREFORMED FABRIC PAD – AASHTO 18.4.9.1, DIV. II
HOLD DOWN BOLTS – ASTM A.325 TYPE 1 GALVANIZED
ANCHOR BOLTS – ASTM F.1554 GR. 55 GALVANIZED

BEARING DATA AND NOTES

1. ALL MATERIAL USED IN THE MANUFACTURE OF THESE BEARINGS SHALL BE MADE IN THE U.S.A.
2. BEARINGS SHALL BE SHIPPED AS COMPLETE UNITS AND SHALL BE MARKED FOR 1 IDENTIFICATION WITH LOCATION. LOCATIONS & STATION AHEAD SHALL BE DIE STAMPED IN ONE CORNER OF SOLE PLATE IN LOCATION VISIBLE AFTER INSTALLATION. THICK END OF BEARING SOLE PLATE SHALL BE MARKED ⊗
3. ALL EDGES OF STEEL PLATES SHALL BE ROUNDED TO A 1/16" [1.6]RADIUS.
4. LOCATION OF FABRICATION PLANT – 70 SOUTH STREET WALPOLE, MA 02081
5. COSMEC, INC. REPRESENTATIVE: MR. MATT McANDREWS (508) 668–6600
6. ALL STEEL SURFACES SHALL BE ZINC METALLIZED IN ACCORDANCE WITH AWS C 2.18. ALL EXPOSED SURFACES SHALL RECEIVE 6 MILS AND THE INTERIOR OF POT AND UNDERSIDE OF PISTON SHALL RECEIVE 2 MILS. AREAS DAMAGED DURING FIELD WELDING SHALL BE REPAIRED IN ACCORDANCE WITH VT A.O.T SUPPLEMENTAL SPECIFICATION 513.
7. UNDER NO CIRCUMSTANCES SHALL THE BEARINGS BE DISASSEMBLED WITHOUT EXPRESS WRITTEN AUTHORIZATION FROM COSMEC, INC. UNAUTHORIZED DISASSEMBLY MAY CAUSE MALFUNCTION OF UNIT.

SHOP DRAWING REVIEW

☐ REVIEWED AS REQUIRED BY THE CONSTRUCTION CONTRACT DOCUMENTS AND APPROVED, BUT ONLY FOR CONFORMANCE TO THE DESIGN CONCEPT OF THE WORK, AND SUBJECT TO FURTHER LIMITATIONS AND REQUIREMENTS CONTAINED IN THE CONSTRUCTION CONTRACT DOCUMENTS.
☐ REJECTED ☐ REVISE AND RESUBMIT ☒ FURNISH AS CORRECTED

CORRECTIONS OR COMMENTS MADE ON THE SHOP DRAWINGS DURING THIS REVIEW DO NOT RELIEVE CONTRACTOR FROM COMPLIANCE WITH REQUIREMENTS OF THE DRAWINGS AND SPECIFICATIONS. THIS CHECK IS ONLY FOR REVIEW OF GENERAL CONFORMANCE WITH THE DESIGN CONCEPT OF THE PROJECT AND GENERAL COMPLIANCE WITH THE INFORMATION GIVEN IN THE CONTRACT DOCUMENTS. THE CONTRACTOR IS RESPONSIBLE FOR: CONFIRMING AND CORRELATING ALL QUANTITIES AND DIMENSIONS; SELECTING FABRICATION PROCESSES AND TECHNIQUES OF CONSTRUCTION; COORDINATING HIS WORK WITH THAT OF ALL OTHER TRADES; AND PERFORMING HIS WORK IN A SAFE AND SATISFACTORY MANNER.

VHB Vanasse Hangen Brustlin, Inc. Engineers, Planners, and Scientists Six Bedford Farms, Kitton Rd. Bedford, NH 03102 603 644 0538
Job Number: 50911
Reviewed By: MMH
Date: 11-11-2004

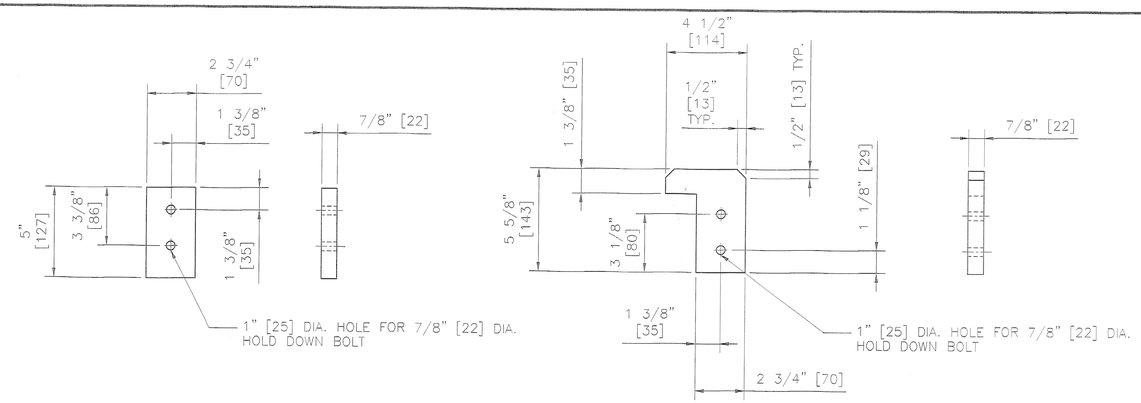

HOLD DOWN PLATES

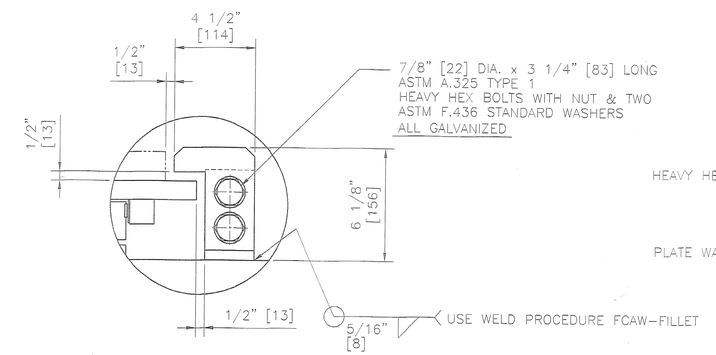

HOLD DOWN DETAIL

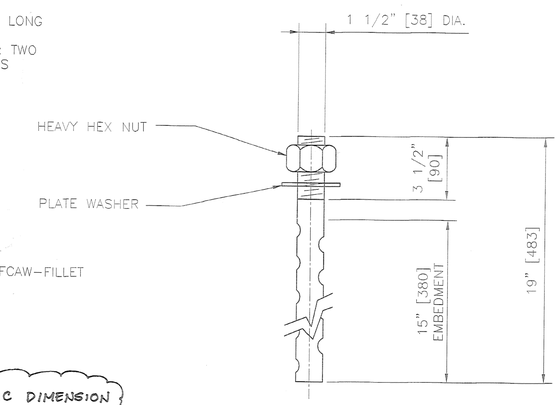

ANCHOR BOLT DETAIL

1 1/2" [38] DIA. x 19" [483] LONG ASTM F.1554 GR. 55 SWEDGED ANCHOR BOLT WITH 3 1/2" [90] THREAD ONE END, ONE HEAVY HEX NUT AND ONE 3/8" [10] x 3 1/4" [83] DIA. PLATE WASHER W/ 1 3/4"[45] DIA. HOLE
1 ALL GALVANIZED

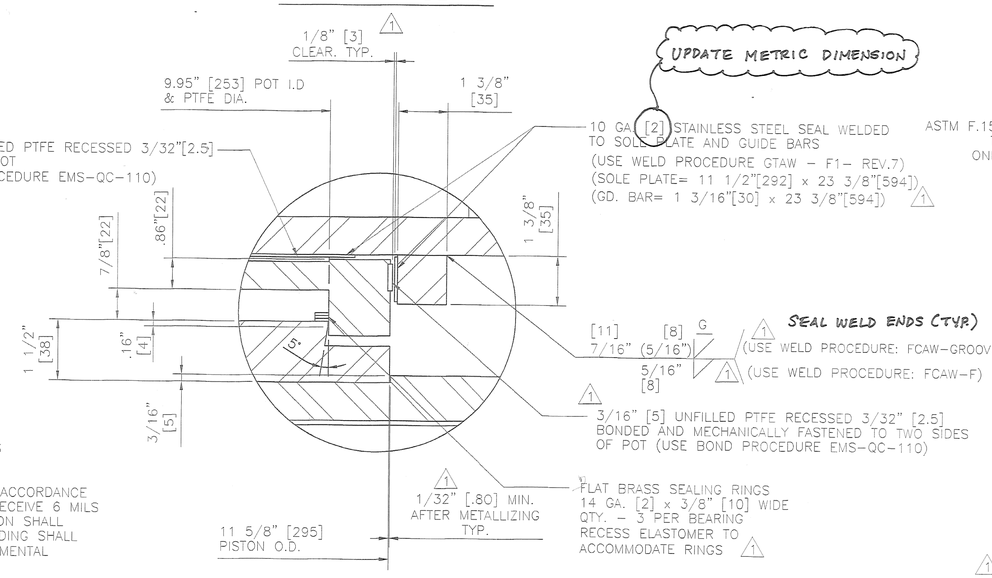

DETAIL A

REV.		BY	DATE	OK'D	DATE
1	ADDED WELD, REV. TO NOTE 2, REV. TO ANCHOR BOLT, OVERALL HEIGHT & AS NOTED	MK	10/13/04	NH	10/14/04

STATE OF VERMONT
AGENCY OF TRANSPORTATION
PROJECT NO. BRF 036–1(1)
TOWNS OF ALBURG–SWANTON
VT 78 OVER MISSISQUOI BAY
BRIDGE NO. 2
ABUTMENT 1 AND 2 & PIER 7, SPAN 7 AND PIER 15, SPAN 16
POT BEARING DETAILS

COSMEC, INC. 70 SOUTH STREET WALPOLE, MA. 02081

SCALE: N.T.S.	DRAWN BY: MCM	CHECKED BY: NH
SHEET 1 OF 7	DATE: 7/27/04	DATE: 8/2/04

COSMEC POT BEARINGS

CUSTOMER	S.O. NUMBER	DRAWING NUMBER	REV.
CIANBRO CORP.	60093	4258	1