209.20 TRENCH EXCAVATION EARTH $9.37 m^2 \times 1.45 m = \underline{13.6 m^3}$ STW 6/28/06

POINT #	OFFSET	ELEVATION
1	-15.32	30.20
2	-27.90	30.40
3	-26.60	31.07
4	-17.12	31.23
1	-15.32	30.20

END AREA BY AREA PROGRAM: $9.37 m^2$

DRAINAGE NOTE # 35: 12+254 LT
(DRAINAGE BOOK 2A p. 30)

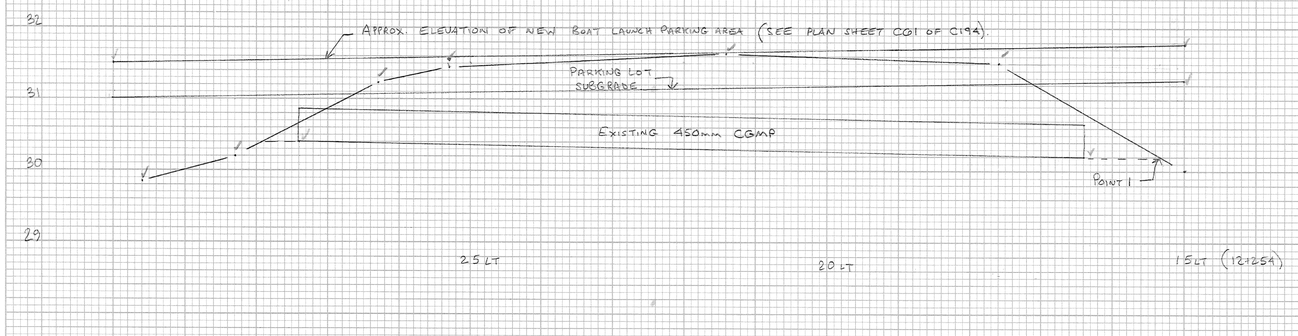

DRAINAGE NOTE # 33: (DRAINAGE BOOK 2A p. 22)

209.20 TRENCH EARTH $8.82 m^2 \times 1.6 m = \underline{14.1 m^3}$

POINT #	OFFSET	ELEVATION
1	-17.0	30.50
2	-27.07	30.35
3	-24.8	31.60
4	-24.5	31.60
5	-20.8	31.70
6	-20.6	31.70
1	-17.0	30.50

STONE FILL, TYPE II ELIMINATED AND REPLACED WITH 301.25 STW

F.G. 33.072

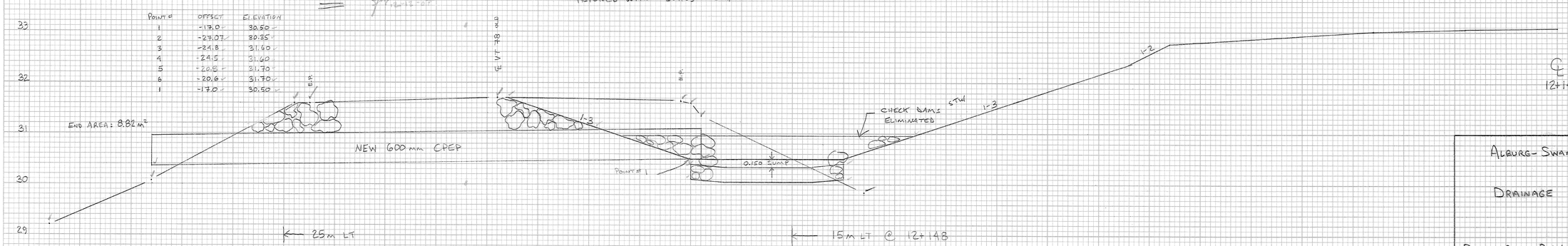

ALBURG-SWANTON BRF 036-1(1)

DRAINAGE

DRAWN BY: S. WHEATLEY 6-28-06
CHECKED BY:

SHEET 8 OF 10

Plot ✓ by SEW 04/21/09

FINAL SURVEY — SURVEYED / PLOTTED / TEMPLATE / AREAS / AREAS CHECKED / NOTE BOOK / NO. / BY / DATE

ORIGINAL SURVEY — SURVEYED / PLOTTED / TEMPLATE / AREAS / AREAS CHECKED / NOTE BOOK / NO. / BY / DATE

HIGHWAY FEDERAL AID SHEET
PLATE 3-FULL CROSS SECTION-FULL LINE
NATIONAL PRINTSHOP
PRINTED IN U.S.A.