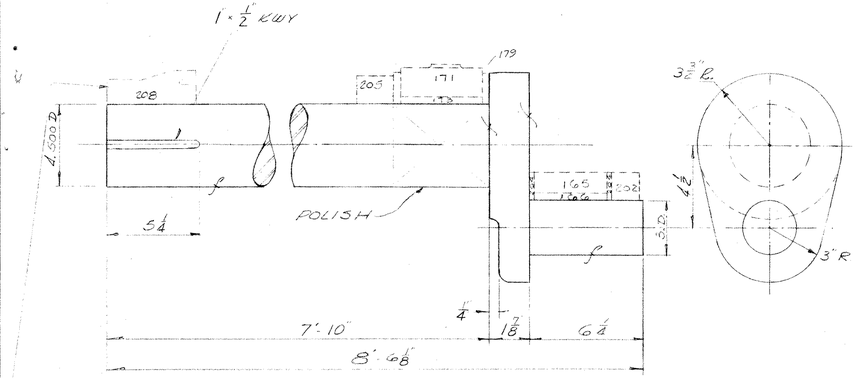

(201) CRANKSHAFT
2 REQ. F.S.

NOTE - SHIP THIS HALF OF COUPLING LOOSE - TO BE DRIVEN ON IN FIELD AFTER SHAFT HAS BEEN PASSED THROUGH GIRDER

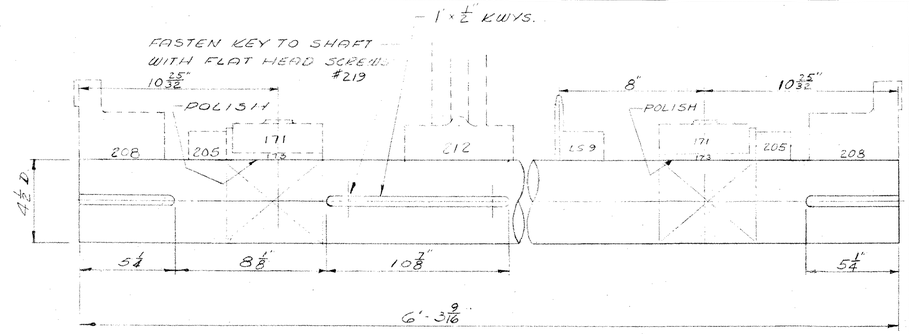

(210) CENTER SHAFT
1 REQ. T.P.S.

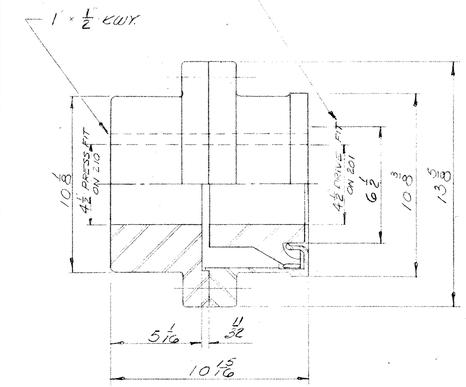

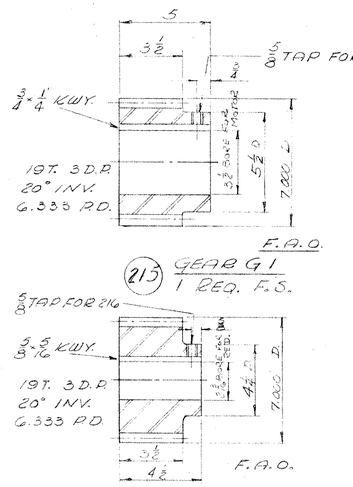

(215) GEAR G1
1 REQ. F.S.

(217) GEAR G3
1 REQ. F.S.

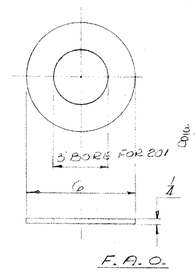

(204) THRUST WASHER
4 REQ. BZ. CL.C.

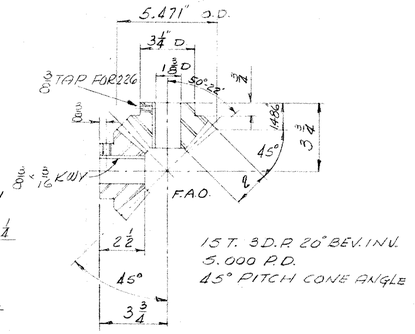

(224) MITER GEARS G4 & G5
2 REQ. F.S.

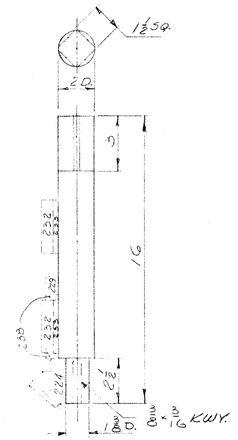

(228) CAPSTAN SHAFT
1 REQ. T.P.S.

(208) SINGLE ENGAGEMENT COUPLING
2 REQ. FAST NO. 4 1/2

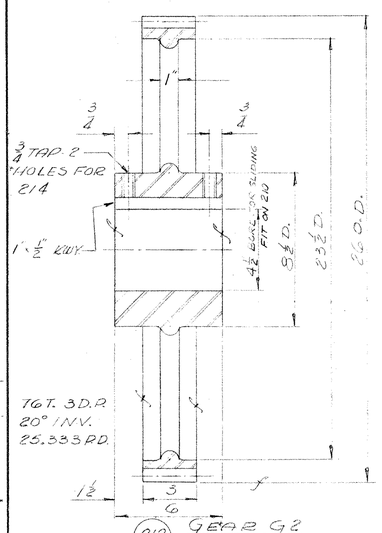

(212) GEAR G2
1 REQ. C.S. PATT.

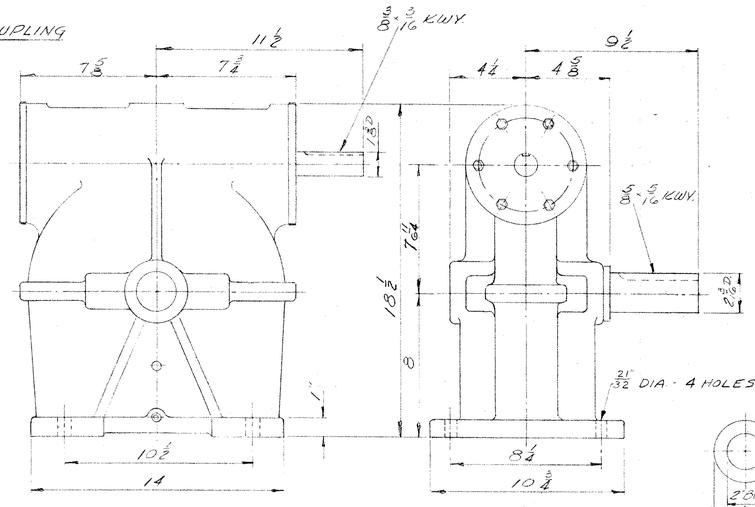

(220) LOCK SPEED REDUCER
1 REQ. D.O. JAMES #10MT
RATIO 8.50 TO 1

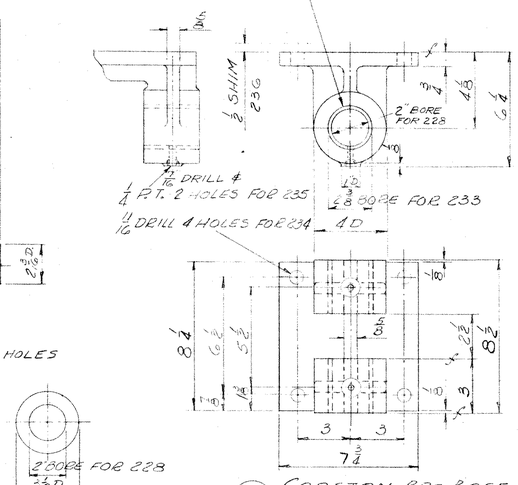

(233) BUSHING FOR 232
2 REQ. BZ. CL.C.

(232) CAPSTAN BRG. BASE
1 REQ. C.S. PATT.

(238) THRUST WASHER
2 REQ. BZ. CL.C.

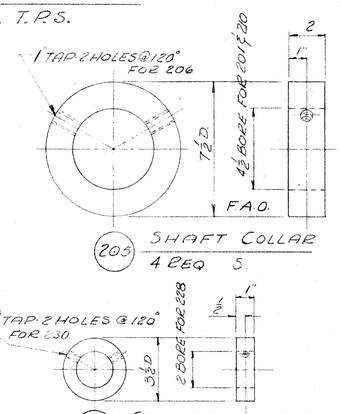

(205) SHAFT COLLAR
4 REQ. S.

(229) COLLAR FOR 228
1 REQ. S.

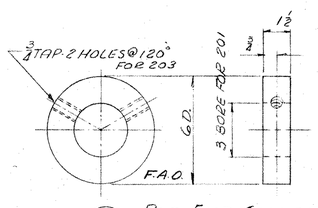

(202) ROD END COLLAR
2 REQ. S.

S.O. D-610 BILL OF MATERIAL DWG. 5627E-30

PC.	NAME	Q.	MAT.	PAT.T.	REMARKS
201	CRANKSHAFT	2	F.S.		
202	ROD END COLLAR	2	S.		
203	SET SCREW FOR 202	4			3/4 × 1 1/2 HOL. CUP PT.
204	THRUST WASHER	4	BZ. CL.C.		
205	SHAFT COLLAR	4	S.		
206	SET SCREW FOR 205	8	S.		1" × 1 1/2" HOL. CUP PT.
207					
208	SINGLE ENG. COUPLING	2			FAST NO. 4 1/2
209	KEY FOR 208	4	S.		KEY LIST
210	CENTER SHAFT	1	T.P.S.		
211					
212	GEAR G2	1	C.S.		
213	KEY FOR 212	1	S.		KEY LIST
214	SET SCREW FOR 212	2	S.		3/4 × 1 1/2 HOL. CUP PT.
215	GEAR G1	1	F.S.		
216	SET SCR. FOR 215 & 217	2			5/8 × 3/4 HOL. CUP PT.
217	GEAR G3	1	F.S.		
218	KEY FOR 217	1	S.		KEY LIST
219	SCREW FOR 213	2	S.		3/8 × 1 1/2 FLAT HD. MACH.
220	LOCK SPEED RED.	1			D.O. JAMES NO. 10MT.
221	BASE BOLT FOR 220	4	S.		T.B. LIST
222					
223	KEY FOR 215	1	S.		KEY LIST
224	MITER GEARS G4 & G5	2	F.S.		
225	KEY FOR 224	2	S.		KEY LIST
226	SET SCREW FOR 224	2			3/8 × 3/4 HOL. CUP PT.
227					
228	CAPSTAN SHAFT	1	T.P.S.		
229	COLLAR FOR 228	1	S.		
230	SET SCREW FOR 229	2	S.		3/8 × 3/4 HOL. CUP PT.
231					
232	CAPSTAN BRG. BASE	1	C.S.		
233	BUSHING FOR 232	2	BZ. CL.C.		
234	BASE BOLT FOR 232	4	S.		T.B. LIST
235	LUB. FTG FOR 232	2			ALEMITE A-1186
236	SHIM FOR 232	1	S.		7 3/4 × 8 1/4 1/4, 1/8, 1/8, 1/16, 1/32
237					
238	THRUST WASHER	2	BZ. CL.C.		

S.O. D-610 CONTRACT

GRANDISLE - NORTH HERO BASCULE BRIDGE, VERMONT

SPECIFICATIONS

INSPECTION

GENERAL NOTES

ALL STEEL CASTINGS & FORGINGS TO BE ANNEALED
SPOT FACE FOR ALL BOLT HEADS & NUTS
SCRIBE PITCH LINES ON BOTH SIDES OF ALL GEARS
SHOP PAINT—ONE COAT—
FINISHED SURFACES COATED—
CUT OIL GROOVES IN ALL BEARINGS UNLESS NOTED
ALL SHIMS TO BE DRILLED

DATE		REVISIONS

THE EARLE GEAR AND MACHINE COMPANY
4707 TO 4715 STENTON AVENUE
PHILADELPHIA 44, PA.

DRAWN BY MCD APPROVED BY
CHECKED BY R.W.D. REV. APPVD.
DATE 10-16-51 REV. APPVD.

SHEET 8 OF DWG. Nº 5627E-30