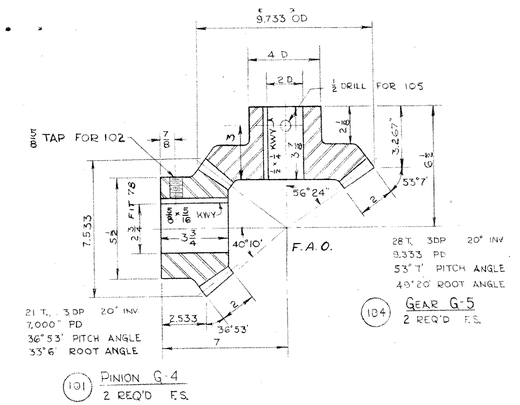

(101) PINION G-4
2 REQ'D F.S.

(104) GEAR G-5
2 REQ'D F.S.

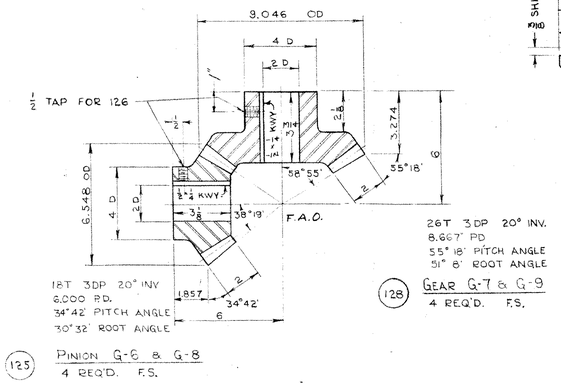

(125) PINION G-6 & G-8
4 REQ'D. F.S.

(128) GEAR G-7 & G-9
4 REQ'D. F.S.

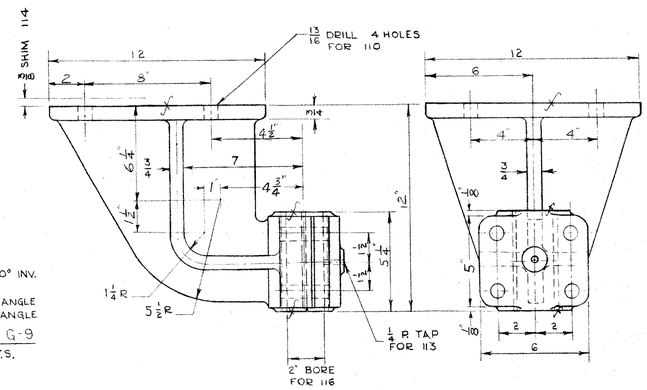

(108) LOWER BEARING
2 REQ'D C.S. PATT

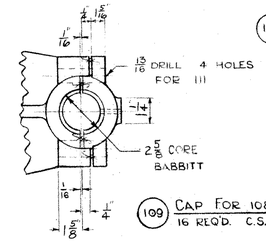

(109) CAP FOR 108, 120, 130
16 REQ'D. C.S. PATT 7740

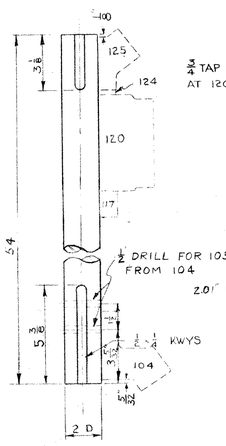

(116) VERTICAL SHAFT
2 REQ'D T.P.S.

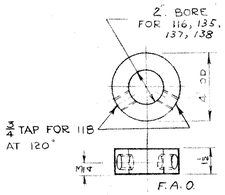

(117) SET COLLAR
8 REQ'D. S.

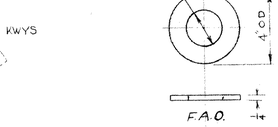

(124) THRUST WASHER
10 REQ'D. BZ. CL. C

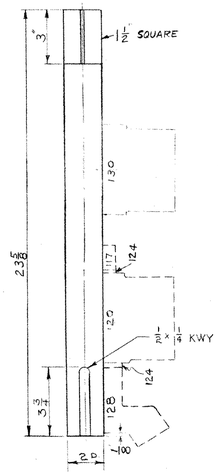

(138) CAPSTAN SHAFT
2 REQ'D T.P.S.

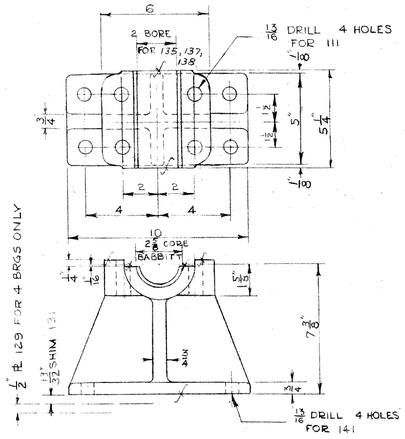

(130) BEARING BASE
6 REQ'D C.S. PATT

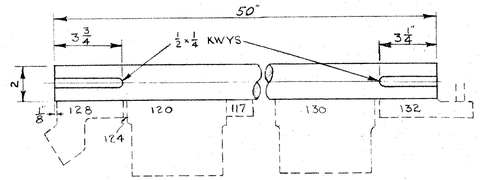

(135) LOWER SHAFT
2 REQ'D. T.P.S.

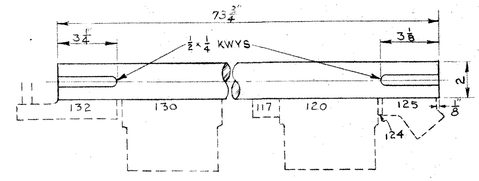

(137) UPPER SHAFT
2 REQ'D T.P.S.

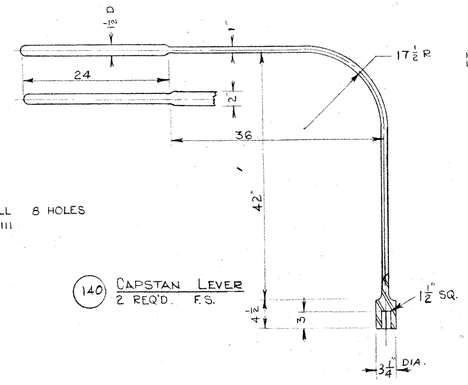

(140) CAPSTAN LEVER
2 REQ'D. F.S.

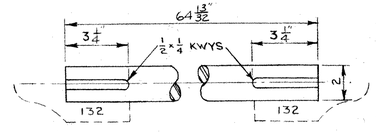

(136) CONNECTING SHAFT
2 REQ'D. T.P.S.

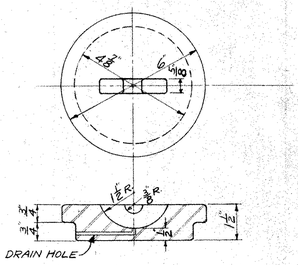

(143) COVER FOR 142
3 REQ'D. C.S. PATT. 2308

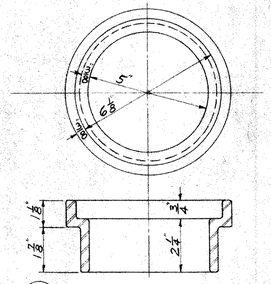

(142) CAPSTAN PAVING FRAME
3 REQ'D. C.S. PATT. 2307

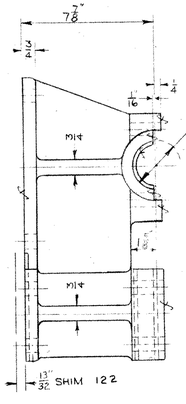

(120) UNION BEARING
4 REQ'D. C.S. PATT

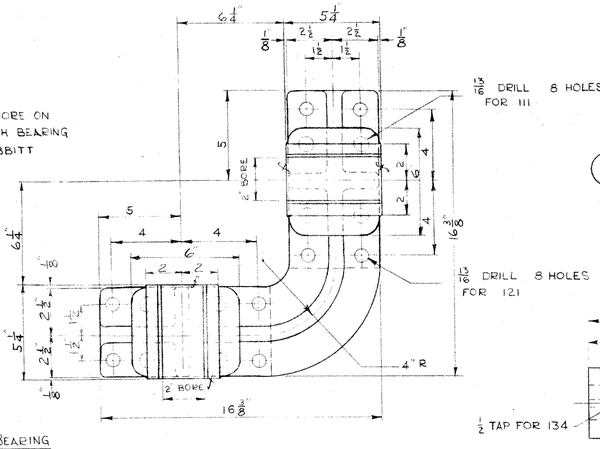

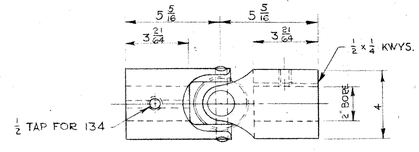

(132) UNIVERSAL JOINT FOR 136
4 REQ'D. BOSTON J 400 B

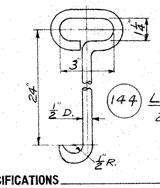

(144) LIFTER FOR 143
2 REQ'D. S.

S.O. D-610 BILL OF MATERIAL DWG. 5625E-30

PC	NAME	Q.	MAT.	PATT.	REMARKS
101	PINION G-4	2	F.S.		
102	SET SCREW FOR 101	2			⅝ × 1⅛ HOL. CUP POINT
103	KEY FOR 101	2	S		KEY LIST
104	GEAR G-5	2	F.S.		
105	BOLT FOR 104	2	F.S.		½ × 5 HEX CAP BOLT & NUT
106	KEY FOR 104	2	S		KEY LIST
107					
108	LOWER BEARING	2	C.S.		
109	CAP FOR 108, 120, 130	16	C.S.	7740	
110	BASE BOLT FOR 108	8	S		TURNED BOLT LIST
111	BOLT FOR 109	64	S		TURNED BOLT LIST
112	LINER FOR 109	32	FIBER		1/16 × 1 · 5¼
113	LUB. FITTING FOR 109	16			ALEMITE A-1186
114	SHIM FOR 108	2	S		12×12×¼, ⅛, 1/16, 1/32
115					
116	VERTICAL SHAFT	2	T.P.S.		
117	SET COLLAR	8	S		
118	SET SCREW FOR 117	16			¾ × 1" HOLLOW CUP POINT
119					
120	UNION BEARING	4	C.S.		
121	BASE BOLT FOR 120	32	S		TURNED BOLT LIST
122	SHIM FOR 120	4	S		¼, ⅛, 1/16, 1/32
123					
124	THRUST WASHER	10	BZ CL. C.		
125	PINION G-6 & G-8	4	F.S		
126	SET SCREW FOR 125 & 128	8	S		½ × ¾ HOLLOW CUP POINT
127	KEY FOR 125 & 128	8	S		KEY LIST
128	GEAR G-7 & G-9	4	F.S.		
129	PLATE FOR 130	4	S.		5 × 10 × ½
130	BEARING BASE	6	C.S.		
131	SHIM FOR 130	6	S		5 × 10 × ¼, ⅛, 1/16, 1/32
132	UNIVERSAL JOINT FOR 136	4			BOSTON J-400 B
133	KEY FOR 132	8			KEY LIST
134	SET SCREW FOR 132	8	S		½ × ¾ HOLLOW CUP POINT
135	LOWER SHAFT	2	T.P.S.		
136	CONNECTING SHAFT	2	T.P.S.		
137	UPPER SHAFT	2	T.P.S.		
138	CAPSTAN SHAFT	2	T.P.S.		
139					
140	CAPSTAN LEVER	2	F.S.		
141	BASE BOLT FOR 130	24	S.		TURNED BOLT LIST
142	CAPSTAN PAVING FRAME	3	C.S.	2307	
143	COVER FOR 142	3	C.S.	2308	
144	LIFTER FOR 143	2	S		

S.O. D-610 CONTRACT

HAND OPERATING MECHANISM FOR
NORTH HERO BASCULE BRIDGE
GRAND ISLE, VERMONT

SPECIFICATIONS

INSPECTION

GENERAL NOTES

ALL STEEL CASTINGS & FORGINGS TO BE ANNEALED
SPOT FACE FOR ALL BOLT HEADS & NUTS
SCRIBE PITCH LINES ON BOTH SIDES OF ALL GEARS
SHOP PAINT—ONE COAT—
FINISHED SURFACES COATED—
CUT OIL GROOVES IN ALL BEARINGS UNLESS NOTED
ALL SHIMS TO BE DRILLED

DATE		REVISIONS

THE EARLE GEAR AND MACHINE COMPANY
4707 TO 4715 STENTON AVENUE
PHILADELPHIA 44, PA.

DRAWN BY G.H.M. APPROVED BY
CHECKED BY R.W.D. REV. APPVD.
DATE 8/24/51 REV. APPVD.
SHEET 6 OF DWG. Nº 5625E-30

2nd submission 10/17