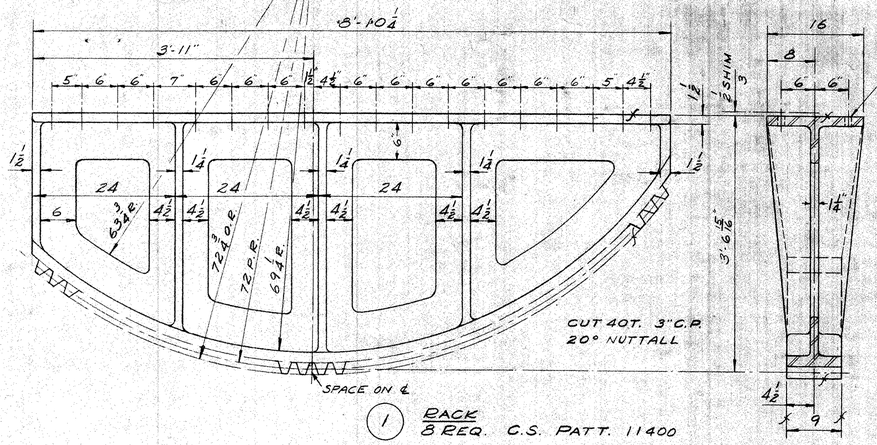

(1) RACK
8 REQ. C.S. PATT. 11400

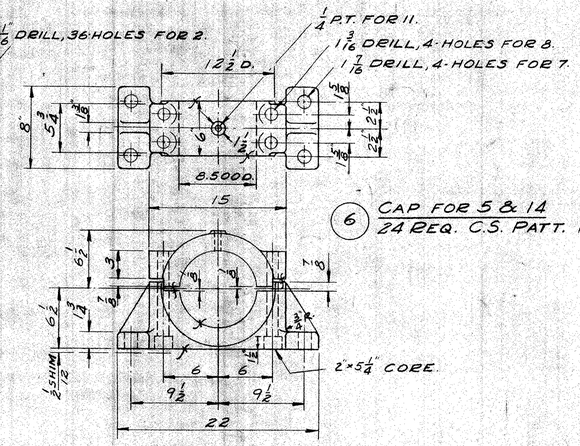

(6) CAP FOR 5 & 14
24 REQ. C.S. PATT. 11402

(5) RACK PINION BEARING
16 REQ. C.S. PATT. 11401

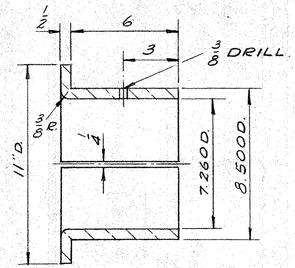

(9) BUSHING FOR 5 & 14
24 REQ. BZ. GR. C
PATT. 11403

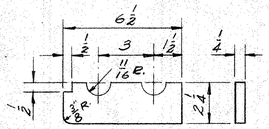

(10) LINER FOR 5 & 14
48 REQ. FIBRE

S.O. D-610 BILL OF MATERIAL DWG 5623 E-30

PC.	NAME	Q.	MAT.	PATT.	REMARKS
1	RACK	8	C.S.	11400	
2	BOLT FOR 1	288	S.		T.B. LIST
3	SHIM FOR 1	8	S.		16"×8'-10¼" 1/4, 1/8, 1/8, 1/16, 1/32
4					
5	RACK PINION BRG.	16	C.S.	11401	
6	CAP FOR 5 & 14	24	C.S.	11402	
7	BASE BOLT FOR 5	64	S.		T.B. LIST
8	BOLT FOR 5 & 6	64	S.		T.B. LIST
9	BUSH. FOR 5 & 14	24	BZ.	11403	
10	LINER FOR 5 & 14	48	FIBRE		
11	LUB. FTG. FOR 6	24			ALEMITE A-1186
12	SHIM FOR 5	16	S.		8×22 1/4, 1/8, 1/8, 1/16, 1/32
13					
14	BEARING BASE	8	C.S.	11404	
15	BOLT FOR 6 & 14	32	S		T.B. LIST
16					
17	OUTSIDE PIN. SHAFT	4	F.S.		
18					
19	INSIDE PIN. SHAFT	4	F.S.		
20					
21	MALE COUP. HALF	4	C.S.	4835	
22	FEMALE COUP. HALF	4	C.S.	4835	
23	KEY FOR 21 & 22	8	S.		KEY LIST
24	BOLT FOR 21 & 22	24	S.		T.B. LIST
25					
26	DRIVE GEAR G-2	4	C.S.	9547	ALT.
27	KEY FOR 26	4	S.		KEY LIST
28	STUB SHAFT	2	S.		
29	BOLT FOR 28	8	S.		½×1½ CAP, NO NUT
30					

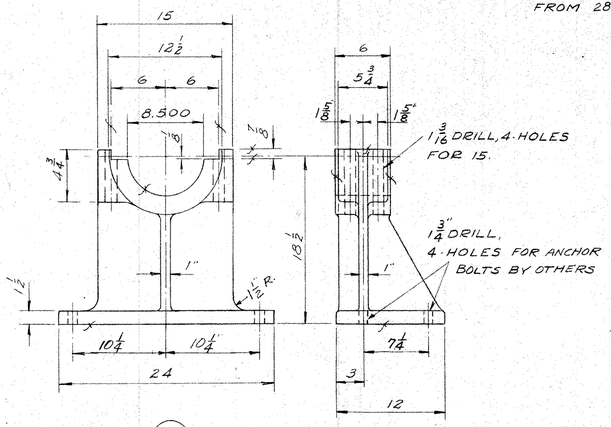

(14) BEARING BASE
8 REQ. C.S. PATT. 11404

NOTE :- ON 2 SHAFTS ONLY COUNTERBORE 1" DIA × ¼" DEEP AT CENTER & ½" TAP 1¼" DEEP 4 HOLES FOR 29 FROM 28

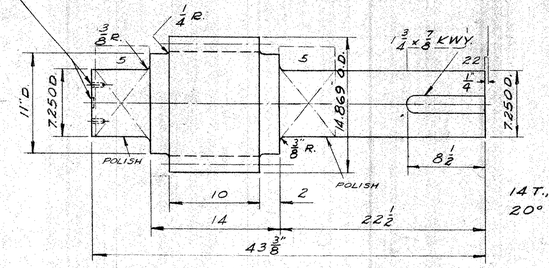

(17) OUTSIDE PINION SHAFT
4 REQ. F.S.

F.A.O.

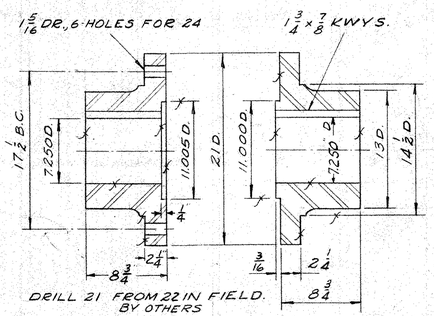

(22) FEMALE COUPLING
4 REQ. C.S.

(21) MALE COUPLING
4 REQ. C.S.

PATT. 4835

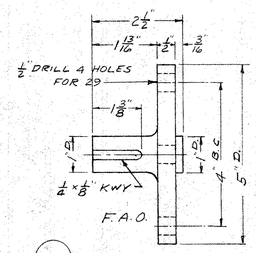

(28) STUB SHAFT FOR LIMIT SWITCH SPROCKET
2 REQ'D. S.

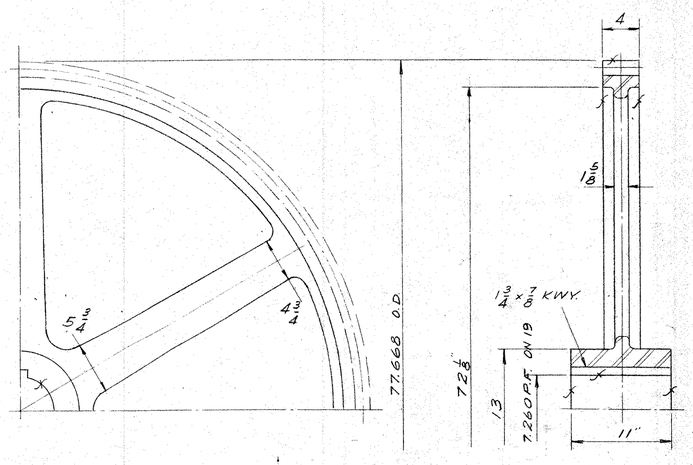

(26) DRIVE GEAR G-2
4 REQ. C.S. PATT. 9547 ALT.

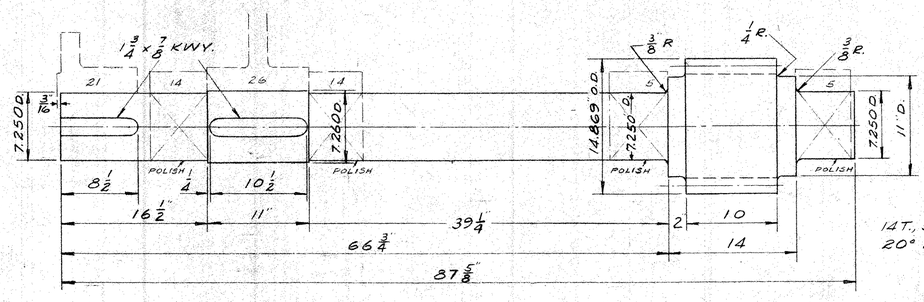

(19) INSIDE PINION SHAFT
4 REQ. F.S.

F.A.O.

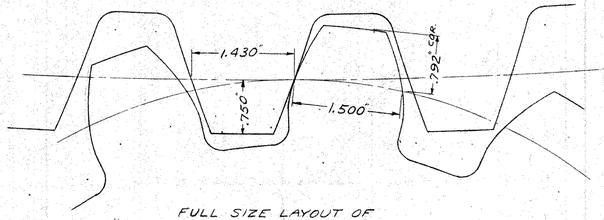

FULL SIZE LAYOUT OF RACK AND PINION TEETH PCS. 1, 17, & 19

APPROVED VERMONT DEPT. OF HIGHWAYS 11/5/51

S. O. D-610 CONTRACT
OPERATING MACHINERY FOR
NORTH HERO BASCULE BRIDGE
GRAND ISLE, VERMONT
AS APPLIES TO AMERICAN BRIDGE CO.
CONTRACT J-9754-8

SPECIFICATIONS
INSPECTION

GENERAL NOTES
ALL STEEL CASTINGS & FORGINGS TO BE ANNEALED
SPOT FACE FOR ALL BOLT HEADS & NUTS
SCRIBE PITCH LINES ON BOTH SIDES OF ALL GEARS
SHOP PAINT—ONE COAT—
FINISHED SURFACES COATED—
CUT OIL GROOVES IN ALL BEARINGS UNLESS NOTED
ALL SHIMS TO BE DRILLED
SCRIBE ℄S. ON ALL BEARINGS, SPEED REDUCERS, ETC.

DATE	REVISIONS
6-18-52	ADDED PCS. 28, 29.
12-3-51	PC 14 BASE BOLT HOLES WERE 1 3/16" DIA, & DIMENSIONS WERE 10½ & 7½

THE EARLE GEAR AND MACHINE COMPANY
4707 TO 4715 STENTON AVENUE
PHILADELPHIA 44, PA.

DRAWN BY E.M.L. APPROVED BY
CHECKED BY R.W.D. REV. APPVD.
DATE 12-3-51 REV. APPVD.
SHEET 4 OF 9 DWG. Nº 5623 E-30