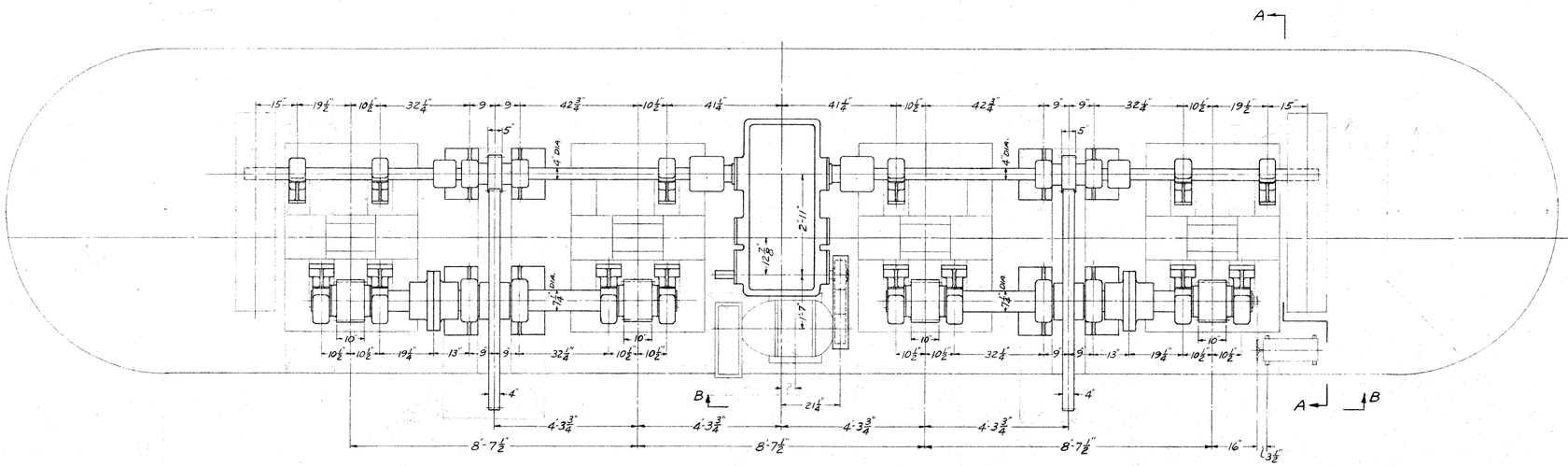

PLAN

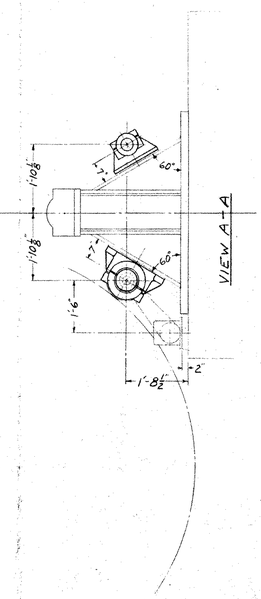

VIEW A-A

NOTE :- MACHINERY ON PIER #2 SHOWN
MACHINERY ON PIER #3 SAME HAND

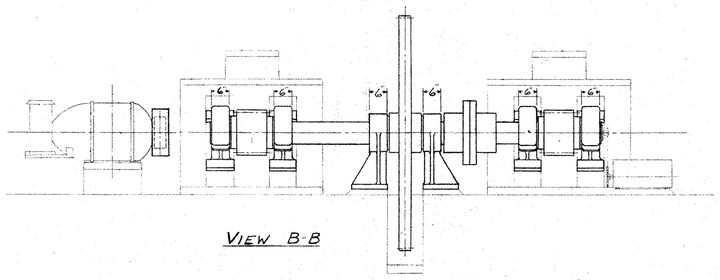

VIEW B-B

SPECIFICATIONS

INSPECTION

GENERAL NOTES

ALL STEEL CASTINGS & FORGINGS TO BE ANNEALED
SPOT FACE FOR ALL BOLT HEADS & NUTS
SCRIBE PITCH LINES ON BOTH SIDES OF ALL GEARS
SHOP PAINT—ONE COAT—
FINISHED SURFACES COATED—
CUT OIL GROOVES IN ALL BEARINGS UNLESS NOTED
ALL SHIMS TO BE DRILLED

DATE		REVISIONS

S. O. D-610 CONTRACT

GRAND ISLE - NORTH HERO BASCULE BRIDGE VERMONT

THE EARLE GEAR AND MACHINE COMPANY
4707 TO 4715 STENTON AVENUE
PHILADELPHIA 44, PA.

DRAWN BY R.W.D APPROVED BY
CHECKED BY REV. APPVD.
DATE 4-6-51 REV. APPVD.
SHEET OF DWG. Nº 5620 E-30