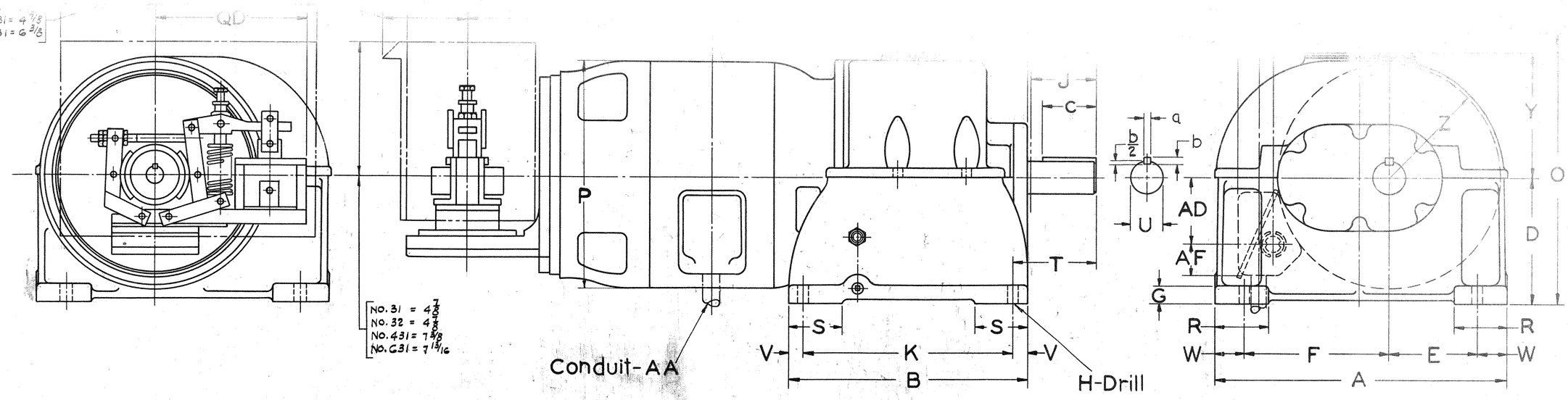

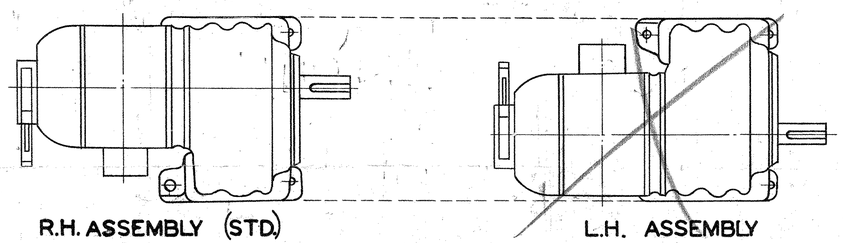

DIMENSIONS FOR REFERENCE ONLY, UNLESS CERTIFIED.

DIMENSIONS CORRESPONDING TO LETTERS GIVEN IN OUTLINE VIEWS - INCHES

UNIT	U●	KEY a	KEY b	KEY c	A	B	D◉	E	F	G	H	J	K	M	N	O	P	R	S	T	V	W	Y	Z	AA▲	AB	AC	AD	AE	AF	BRAKE #31 C	BRAKE #31 QA	BRAKE #31 QB	BRAKE #31 QD	BRAKE #32 C	BRAKE #32 QA	BRAKE #32 QB	BRAKE #32 QD	BRAKE #431 C	BRAKE #431 QA	BRAKE #431 QB	BRAKE #431 QD	BRAKE #631 C	BRAKE #631 QA	BRAKE #631 QB	BRAKE #631 QD	APPROX. WT. GEARMOTOR-BRAKE #31	#32	#431	#631
EK*224	2 3/4	5/8	7/16	4 1/2	19 3/4	15 1/2	7 1/2	5 1/2	10 1/2	1 3/8	13/16	5 3/8	13 1/2	23 5/16	5 1/2	16 13/16	10 1/8	3 1/4	3 1/2	6 1/2	1	1 7/8	—	7	1/2-3/4	7 3/16	6	2 15/16	5 7/16	1 3/8	35 9/16	12 1/4	10 1/2	6 5/16	36 9/16	13 1/4	11 1/32	6 5/16	37 13/16	14 1/2	11 5/16	10 5/8	—	—	—	—	528	533	—	—
EK*225	2 3/4	5/8	7/16	4 1/2	19 3/4	15 1/2	7 1/2	5 1/2	10 1/2	1 3/8	13/16	5 3/8	13 1/2	23 11/16	5 1/2	16 13/16	10 1/8	3 1/4	3 1/2	6 1/2	1	1 7/8	—	7	1/2-3/4	7 3/16	6	2 15/16	5 7/16	1 3/8	36 5/16	12 5/8	10 7/8	6 5/16	37 5/16	13 5/8	11 13/32	6 5/16	38 9/16	14 7/8	11 11/16	10 5/8	—	—	—	—	543	548	590	—
EK*254	2 3/4	5/8	7/16	4 1/2	19 3/4	15 1/2	7 1/2	5 1/2	10 1/2	1 3/8	13/16	5 3/8	13 1/2	24 3/8	5 1/2	16 13/16	11 1/2	3 1/4	3 1/2	6 1/2	1	1 7/8	—	7	1/2-3/4-1	7 3/4	6	3 3/8	5 15/16	1 5/8	37 7/8	13 1/2	11 3/4	6 5/16	38 7/8	14 1/2	12 9/32	6 5/16	40 1/8	15 3/4	12 9/16	10 5/8	—	15 7/8	12 7/8	12 5/8	580	555	627	650
EK*284	2 3/4	5/8	7/16	4 1/2	19 3/4	15 1/2	7 1/2	5 1/2	10 1/2	1 3/8	13/16	5 3/8	13 1/2	25 7/16	5 1/2	16 13/16	11 1/2	3 1/4	3 1/2	6 1/2	1	1 7/8	—	7	1/2-3/4-1	7 3/4	6	3 3/8	5 15/16	1 5/8	39 3/4	14 5/16	12 9/16	6 5/16	40 3/4	15 5/16	13 3/32	6 5/16	42	16 9/16	13 3/8	10 5/8	42 1/8	16 11/16	13 11/16	12 5/8	610	615	658	682
EL*225	3 1/8	3/4	1/2	5 1/4	23 1/2	19	8 1/2	6 3/8	12 5/8	1 3/8	15/16	6 1/8	16 3/4	26 15/16	6 1/4	18 13/16	10 1/8	4	4	7 3/8	1 1/8	2 1/4	—	8	1/2-3/4	7 3/16	6	2 15/16	5 7/16	1 3/8	39 9/16	12 5/8	10 7/8	6 5/16	40 9/16	13 5/8	11 13/32	6 5/16	41 13/16	14 7/8	11 11/16	10 5/8	—	—	—	—	763	768	810	—
EL*254	3 1/8	3/4	1/2	5 1/4	23 1/2	19	8 1/2	6 3/8	12 5/8	1 3/8	15/16	6 1/8	16 3/4	27 5/8	6 1/4	18 13/16	11 1/2	4	4	7 3/8	1 1/8	2 1/4	—	8	1/2-3/4-1	7 3/4	6 9/16	3 3/8	5 15/16	1 5/8	41 1/8	13 1/2	11 3/4	6 5/16	42 1/8	14 1/2	12 9/32	6 5/16	43 3/8	15 3/4	12 9/16	10 5/8	43 1/2	15 7/8	12 7/8	12 5/8	800	805	847	870
EL*284	3 1/8	3/4	1/2	5 1/4	23 1/2	19	8 1/2	6 3/8	12 5/8	1 3/8	15/16	6 1/8	16 3/4	28 11/16	6 1/4	18 13/16	11 1/2	4	4	7 3/8	1 1/8	2 1/4	—	8	1/2-3/4-1	7 3/4	6 9/16	3 3/8	5 15/16	1 5/8	43	14 5/16	12 9/16	6 5/16	44	15 5/16	13 3/32	6 5/16	45 1/4	16 9/16	13 3/8	10 5/8	45 3/8	16 11/16	13 11/16	12 5/8	830	835	878	902
EL*324	3 1/8	3/4	1/2	5 1/4	23 1/2	19	8 1/2	6 3/8	12 5/8	1 3/8	15/16	6 1/8	16 3/4	29 7/16	6 1/4	18 13/16	14 1/2	4	4	7 3/8	1 1/8	2 1/4	—	8	1/2-3/4-1	9 3/16	8	4 5/16	7 3/8	1 5/8	—	—	—	—	—	—	—	—	47 1/4	17 13/16	14 5/8	10 5/8	47 3/8	17 15/16	14 15/16	12 5/8	—	—	935	957
EL*326	3 1/8	3/4	1/2	5 1/4	23 1/2	19	8 1/2	6 3/8	12 5/8	1 3/8	15/16	6 1/8	16 3/4	30 3/16	6 1/4	18 13/16	14 1/2	4	4	7 3/8	1 1/8	2 1/4	—	8	1/2-3/4-1	9 3/16	8	4 5/16	7 3/8	1 5/8	—	—	—	—	—	—	—	—	48 3/4	18 9/16	15 3/8	10 5/8	48 7/8	18 11/16	15 11/16	12 5/8	—	—	955	977
EM*254	3 1/2	3/4	1/2	5 1/2	27 1/2	21	10	7 5/16	15 5/16	1 5/8	1 1/16	6 7/8	18 1/2	30 7/16	7	21 3/4	11 1/2	4 5/8	5	8 1/4	1 1/4	2 7/16	9 7/16	9	1/2-3/4-1	7 3/4	6 9/16	3 3/8	5 15/16	1 5/8	43 15/16	13 1/2	11 3/4	6 5/16	44 15/16	14 1/2	12 9/32	6 5/16	46 3/16	15 3/4	12 9/16	10 5/8	46 5/16	15 7/8	12 7/8	12 5/8	1105	1110	1152	1175
EM*284	3 1/2	3/4	1/2	5 1/2	27 1/2	21	10	7 5/16	15 5/16	1 5/8	1 1/16	6 7/8	18 1/2	31 1/2	7	21 3/4	11 1/2	4 5/8	5	8 1/4	1 1/4	2 7/16	9 7/16	9	1/2-3/4-1	7 3/4	6 9/16	3 3/8	5 15/16	1 5/8	45 9/16	14 5/16	12 9/16	6 5/16	46 13/16	15 5/16	13 3/32	6 5/16	48 1/16	16 9/16	13 3/8	10 5/8	48 3/16	16 11/16	13 11/16	12 5/8	1130	1135	1178	1202
EM*324	3 1/2	3/4	1/2	5 1/2	27 1/2	21	10	7 5/16	15 5/16	1 5/8	1 1/16	6 7/8	18 1/2	32 1/4	7	21 3/4	14 1/2	4 5/8	5	8 1/4	1 1/4	2 7/16	9 7/16	9	1/2-3/4-1	9 3/16	8	4 5/16	7 3/8	1 5/8	—	—	—	—	—	—	—	—	50 1/16	17 13/16	14 5/8	10 5/8	50 3/16	17 15/16	14 15/16	12 5/8	—	—	1240	1262
EM*326	3 1/2	3/4	1/2	5 1/2	27 1/2	21	10	7 5/16	15 5/16	1 5/8	1 1/16	6 7/8	18 1/2	33	7	21 3/4	14 1/2	4 5/8	5	8 1/4	1 1/4	2 7/16	9 7/16	9	1/2-3/4-1	9 3/16	8	4 5/16	7 3/8	1 5/8	—	—	—	—	—	—	—	—	51 9/16	18 9/16	15 3/8	10 5/8	51 11/16	18 11/16	15 11/16	12 5/8	—	—	1260	1282
EN*324	4 1/4	1	3/4	7	33	24	11	9	18 1/4	2	1 5/16	8 3/8	21	36	8 1/2	24 11/16	14 1/2	5 1/4	6	10	1 1/2	2 7/8	10 3/4	10 1/4	1/2-3/4-1	9 3/16	8	4 5/16	7 3/8	1 5/8	—	—	—	—	—	—	—	—	53 13/16	17 13/16	14 5/8	10 5/8	53 15/16	17 15/16	14 15/16	12 5/8	—	—	1615	1637
EN*326	4 1/4	1	3/4	7	33	24	11	9	18 1/4	2	1 5/16	8 3/8	21	36 3/4	8 1/2	24 11/16	14 1/2	5 1/4	6	10	1 1/2	2 7/8	10 3/4	10 1/4	1/2-3/4-1	9 3/16	8	4 5/16	7 3/8	1 5/8	—	—	—	—	—	—	—	—	55 5/16	18 9/16	15 3/8	10 5/8	55 7/16	18 11/16	15 11/16	12 5/8	—	—	1635	1657
EP*326	4 11/16	1	3/4	8	40	28	13	11 1/4	21	2 3/8	1 5/8	9 1/4	24	39 1/4	9 3/8	28 11/16	14 1/2	7 3/8	8	11 3/8	2	3 7/8	12 3/4	12 1/4	1/2-3/4-1	9 3/16	8	4 5/16	7 3/8	1 5/8	—	—	—	—	—	—	—	—	57 13/16	18 9/16	15 3/8	10 5/8	57 15/16	18 11/16	15 11/16	12 5/8	—	—	2125	2147

● TOLERANCE +.000 -.001

▲ CONDUIT BOX FURNISHED WITH KNOCKOUTS AT BOTTOM AND BOTH SIDES FOR CONDUIT SIZES SPECIFIED. CONDUIT BOX MAY BE TURNED 180° FOR CONNECTION AT TOP.

* WHEN IDENTIFYING DIMENSIONS, BE SURE TO ADD THIRD LETTER OF PREFIX :- FOR CLASS I UNITS "A"; CLASS II UNITS "B"; CLASS III UNITS "C."

◉ THIS DIMENSION WILL NEVER BE EXCEEDED, WHEN EXACT DIMENSION IS REQUIRED, SHIMS UP TO 1/32" MAY BE NECESSARY.

Westinghouse
ELECTRIC & MANUFACTURING CO.

TITLE TYPE "E" GEARMOTORS WITH CSP LIFE LINE, OPEN, SPLASH PROOF, ENCL. MOTORS WITH TYPE AT BRAKES.

DIMENSIONS IN INCHES--SCALE

DFTM. H.C.Jr. 4-3-47 J.M.E. 8-19-47 CHKD. APPD. X 8/20/47

10-A-4507