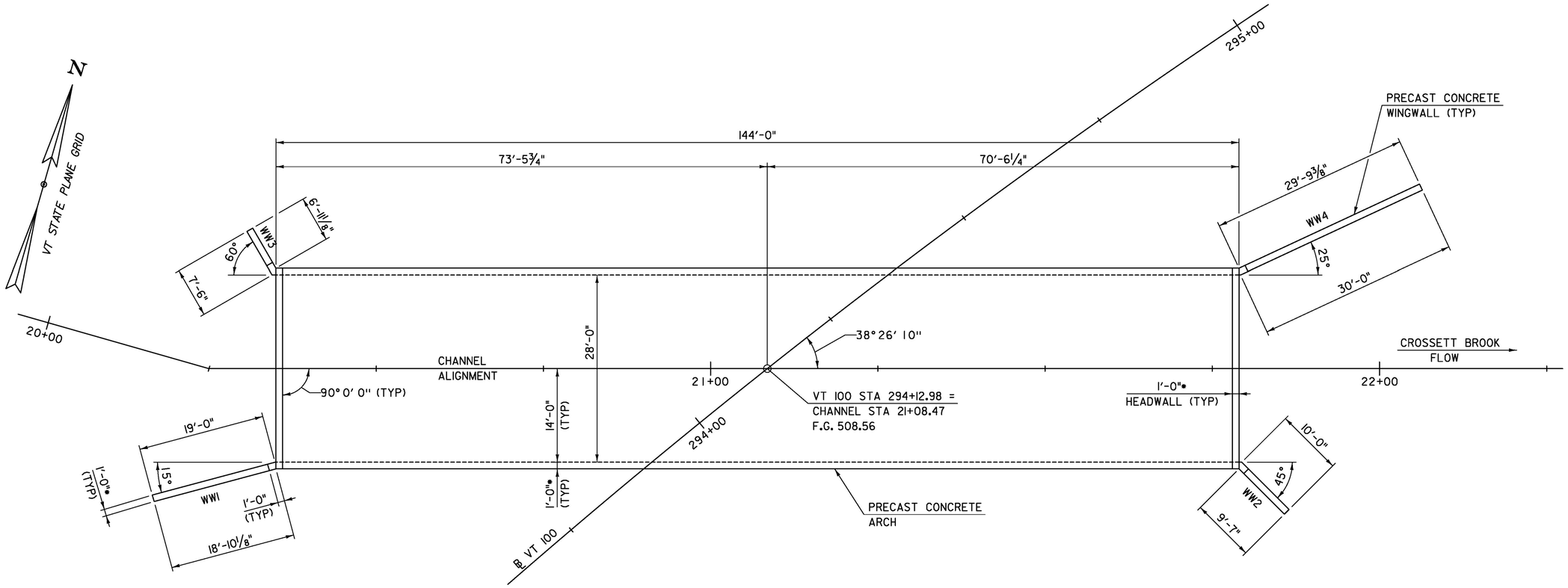

• - FOR ESTIMATING PURPOSES ONLY. ACTUAL DIMENSIONS SHALL BE DETERMINED BY THE FABRICATOR

PRECAST CONCRETE STRUCTURE PLAN

SCALE ⅛" = 1'-0"

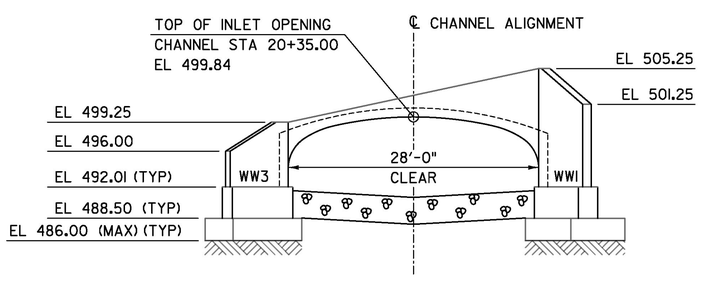

UPSTREAM ELEVATION LOOKING DOWNSTREAM

SCALE ⅛" = 1'-0"

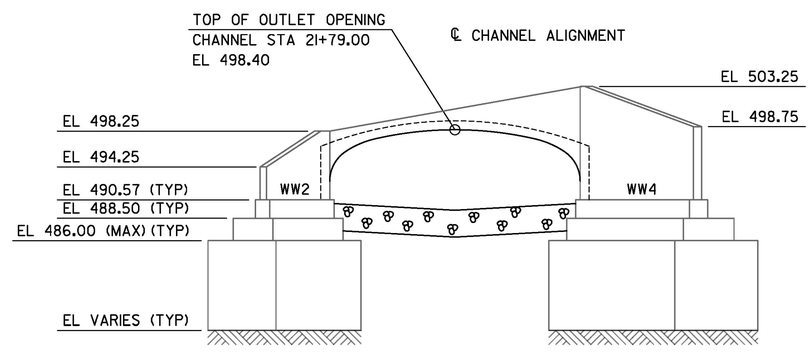

DOWNSTREAM ELEVATION LOOKING UPSTREAM

SCALE ⅛" = 1'-0"

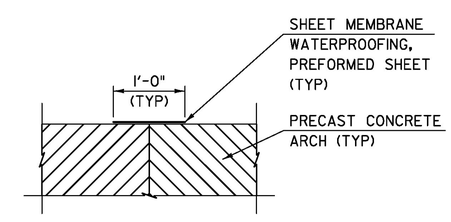

PRECAST ARCH JOINT COVER

SCALE 1" = 1'-0"

T·Y·LIN INTERNATIONAL	PROJECT NAME: DUXBURY PROJECT NUMBER: BF 013-4(47)	
	FILE NAME: z16b001struct.dgn PROJECT LEADER: J. OLUND DESIGNED BY: D. MYERS PRECAST CONCRETE STRUCTURE PLAN	PLOT DATE: 5/23/2016 DRAWN BY: D. MYERS CHECKED BY: B. TOOTHAKER SHEET 42 OF 69