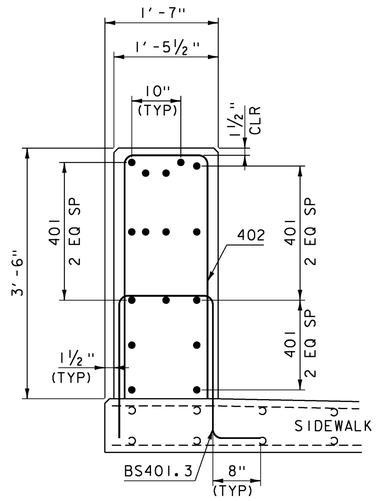

SECTION A-A

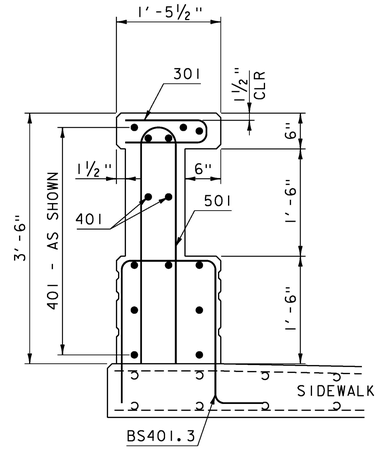

SECTION B-B

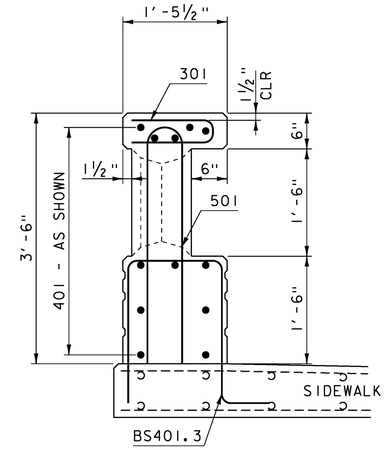

SECTION C-C

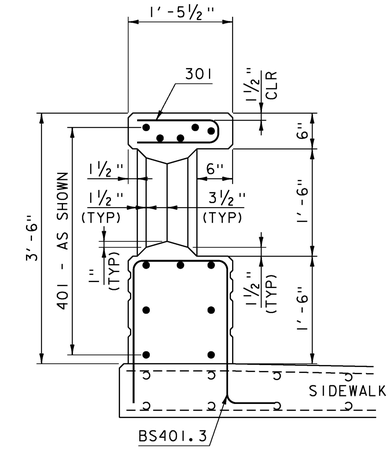

SECTION D-D

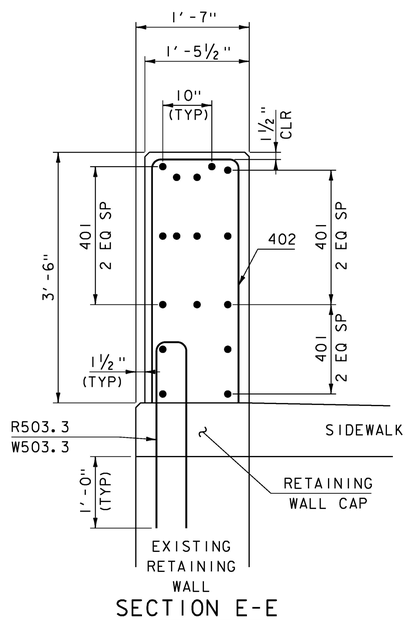

SECTION E-E

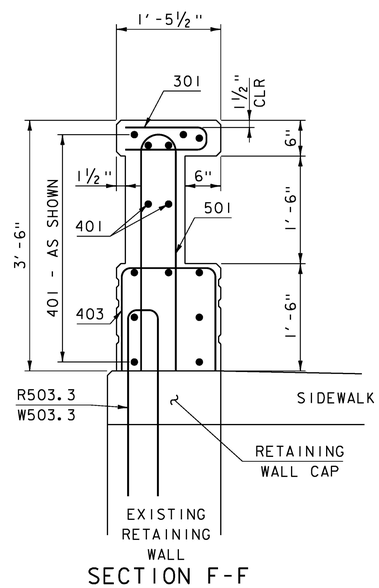

SECTION F-F

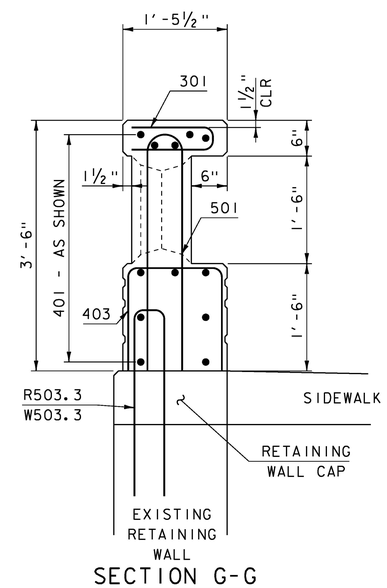

SECTION G-G

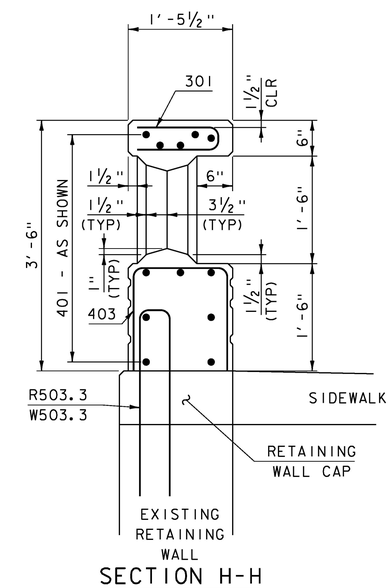

SECTION H-H

NOTE:

NF = NEAR FACE
FF = FAR FACE
EF = EACH FACE
▲ = CUT TO FIT IN FIELD
1¾" CLEAR, UNLESS OTHERWISE SPECIFIED ON THE PLANS.
2'-2" BAR LAP UNLESS OTHERWISE SPECIFIED ON THE PLANS.
ALL CHAMFERS ARE ¾"

PROJECT NAME: WOODSTOCK VILLAGE	
PROJECT NUMBER: BF 020-2(43)	
FILE NAME: 13J280/s13J280rail.dgn	PLOT DATE: 18-JUL-2017
PROJECT LEADER: R.YOUNG	DRAWN BY: D.D.BEARD
DESIGNED BY: W.LAMMER	CHECKED BY: W.LAMMER
RAILING SECTIONS	SHEET 19 OF 53